Owner's manual
Parts manual

JNSZ650DLB

READ THIS MANUAL CAREFULLY.
IT CONTAINS IMPORTANT SAFETY

MINIMUM RECOMMENDED OPERATOR AGE. 16

<u>FOR OFF-ROAD USE ONLY</u>
This vehicle is designed and manufactured for off-road use only.
USA only;
It does not confirm to federal motor vehicle safety standards, and operation on public streets, roads, or highways is illegal.

CONTENTS

WARRANTY POLICY **5**

OWNER'S MANUAL **16**

FOREWORD 16
FOREWORD ABOUT SAFETY 17
IMPORTANT SAFETY INFORMATION 18
Follow the Age Recommendation 18
Always Wear a Helmet 18
Drive Off-Road Only 18
Take Time to Learn & Practice 18
Be Alert for Off-Road Hazards 18
Drive within Your Limits 18
Don't Drink and drive 18
Never run your Go- Vehical indoors. 18
IMPORTANT SAFETY INFORMATION 19
Keep away from moving parts of the Off Highway Recreational Vehicles 19
Skidding or Sliding 19
SAFETY LABLES 19
ARE YOU READY TO DRIVE? 20
PROTECTIVE APPAREL 21
ADDITIONAL DRIVING GEAR 21
DRIVE TRAINING 21
Age Recommendation 22
NO ALCOHOL OR DRUGS 22
IS YOUR VEHICLE READY TO DRIVE? 23
Pre-drive Inspection 23
Engine Oil 23
Coolant 23
Fuel 23
Tires 23
Nuts & Bolts 23
PRE-DRIVE INSPECTION 23
Underbody & Exhaust System 23
Air Cleaner 23
Leaks, Loose Parts 24
Lights 24
Throttle 24
Brakes 24
Engine Stop 24
Steering Wheel 24
Cable 24
Tie rod 24
SAFE DRIVING PRECAUTIONS 24
Off-road use only 24

Keep Hands and Feet on Controls 25
Control Speed 25
Use Care on Unfamiliar or Rough Terrain 26
Do Not Perform Stunts 26
SPECIFICATIONS 27
OPERATION 28
Operation controls 28
Engine stop key 30
Pre-Drive Inspection 30
Passengers 32
Seat 32
Parking 33
Gear Shift 33
Break-in 34
Starting and Operating Instructions 34
SERVICE INSTRUCTIONS 35
Air filter 35
Engine oil replacement 35
Check engine oil and recharge 36
Transmission lubrication 36
Check transmission oil 36
Engine Coolant 36
Spark Plug 38
Carburetor Adjustment 38
Cleaning Instructions 39
Vehicles Lubrication 39
Storage Instruction 40
REPAIR 41
Front Wheel Replacement 41
Rear Wheel Replacement 41
Clutch replacement 42
Timing setup and balancing shaft setup 46
Water pump disassembly 48
Distributor replacement 50
WIRING DIAGRAM 57
ELECTRICAL SCHEMATIC DIAGRAM 58

PARTS MANUAL 59

CYLINDER BLOCK PART 59
SPROCKET COVER AND OIL PAN PART 61
CYLINDER HEAD PART 63
PISTON， CONNETING ROD AND CRANKSHAFT PART 65
BALANCING SHAFT PART 67
CAMSHAFT AND CHAIN TRAIN PART 68
INTAKE MANIFOLD PART 70
OIL FILTER AND OIL PUMP PART 71

WATER PUMP AND FAN PART 72
DISTRIBUTOR AND ITS LINE UNIT 73
CARBURETOR PART 74
AIR FILTER AND PIPE LINE PART 75
STARTER， ALTERNATOR AND THEIR FASTENING PIECE 76
TRANSMISSION TANK 77
CLUTCH， SHIFTER SHAFT AND ROCKER ARM 79
DIFFERENTIAL 80
ONE SHAFT OUTPUT (OPTION) 81
FIRST SHAFT AND COUNTERSHAFT 82
GEAR SHIFTED GEAR FORK 84
AIR FILTER FOR USA 86
FRAME 87
ENGINE MOUNT 89
GEAR SHIFT 90
STEERING ASSY 92
PEDAL CONTROL AND PARK BRAKE 94
PARKING BRAKE ASSY 95
THROTTLE AND PARK ASSY 96
FRONT HOUSING 98
MUFFLER 100
FUEL TANK AND GASOLINE PUMP 102
REAR CARGO RACK AND ROLL BAR 104
REAR HOUSING 106
RADIATOR AND AIR CLEANER 108
ELECTRIC APPLIANCE 110
SEAT AND SAFETY BELT 112
OTHER PARTS 113
FRONT RACK OPTION 114
REAR RACK OPTION 115
PADDOCK ROOF RACK OPTION 116
RIFLE ROOF RACK OPTION 117
NERF ROOF RACK OPTION 118
3000B WINCH OPTION 119
SPOTLIGHT OPTION 120
TOW BALL OPTION 121
SAFTY BELT TUBE OPTION 122
SHOCK ABSORBER COAT OPTION 123
TOOLS AND BAG KIT OPTION 124
ENVELOPMENT AND FOAM COVER OPTION 125

PREPARATION ATTACH INSTRUCTION 126

REMOVE PACKING 126
INSTALL THE FRONT SUSPENSION ARM 127
FRONT SHOCK ABSORBER, STUB AXLE 128
ATTACH TIE ROD AND FRONT WHEES 129

ATTACH THE REAR SUSPENSION ARM 131
ATTACH PROPELLER SHAFT AND SHAFT CARRIER 132

ATTACH REAR SHOCK ABSORBER AND REAR WHEEL 134

ATTACH REAR SHOCK ABSORBER AND REAR WHEEL 135
ATTACH REAR BUMPER BAR 136
ATTACH ROLL BAR 137
ATTACH RADIATOR AND COVER 138
ATTACH MUFFLER 139
ATTACH SEATS AND SAFETY BELT 140
CHECK VEHICAL 141

DEALER PRE-DELIVERY INSPECTION 142

Team joyner USA

joyner INTERNATIONAL

WORLDWIDE

Team Joyner Middle East
Team Joyner Canada
Team Joyner Germany
Team Joyner Spain
Team Joyner Italy
Team Joyner China
Team Joyner United Kingdom

Liability Release of Joyner Recreational Vehicles

Warranty Disclosure

Warranty Parts Order Form

Service Record

Preventative Maintenance and Service Log

1. **Liability Release** needs to be signed by the dealer and purchaser then faxed back to Joyner at 480-813-6379
2. **Service Record** Form must be filled out and signed off by the dealer and the purchaser and faxed back to Joyner to activate warranty.
3. **Pre Delivery Inspection** is to be completed by a qualified technician. It must be initialed and signed off by the technician. At the same time, the consumer needs to initial off and confirm that each item of the 120 point check is operational.
4. **Customer Sign Off** must be initialed by customer after receiving PDI with dealership and confirming the vehicle is fully operational.
5. **Operator Maintenance** should be conducted by an Individual that has knowledge of vehicle and has completely read and understand the operator's manual.

Effective 3-15-08

All warranty claims must be processed through an authorized Joyner dealer. A copy of all documentation must be on file with Team Joyner USA, Inc.

Protect your vehicle and your safety. Follow the schedule listed within.

WWW.TEAMJOYNERUSA.COM

Toll Free 1-866-441-6363

After completing assembly and PDI Fax to 480-813-6379

•1510 W. Bell De Mar Dr. Tempe, AZ. 85283 • Phone: 480.813.6363 - Fax: 480.813.6379 •

Page

This release covers Joyner vehicles, dealers, and all affiliates of Castle Financial Corporation.

Liability Release of Joyner Recreational Vehicles

Please Initial and Sign

___ 1) Jumping the vehicle can cause serious damage to the drive train (axle, transmission, suspension)

___ 2) Injury or death can result from jumping vehicle. Do not jump.

___ 3) I understand that the roll bars are cosmetic and a roll over could cause death or serious injury. The seller is not liable for death or injury.

___ 4) I have inspected all machines for any cosmetic damage and found it/them to be satisfactory. I further understand that cosmetic damage is NOT covered by any factory warranties and unless noted here are deemed acceptable by me.

___ 5) Off-roading is dangerous. Death or injury could occur. The seller is not liable for injury or death.

___ 6) I understand all sales are final and that there is no right of rescission; no option for return or exchange for any vehicle purchased; and that the titled and registered machines were effectively purchased when I signed the title application.

___ 7) I understand the warranty is 90 days manufacturer defect only. Parts are covered but no labor.

___ 8) I understand that although some lending institutions do not require insurance, state law DOES require liability insurance and a driver's license. I also understand that some of the products offered by the dealer constitutes insurance and a separate policy would have to be purchased from an outside source to protect my purchase and fulfill state requirements.

___ 9) I have also been shown the VIN number for each machine and they match this form and all paperwork received.

___ 10) I understand that I have only 72 hours to notify the seller of any issues to the paperwork of the vehicle. After 72 hours it will be accepted by the purchaser.

___ 11) Off Road use only. Driving on paved roads can cause axle or transmission damage. Both tires turn equally, this is not a limited slip differential. Injury or death can occur from operating a non-DOT vehicle on public roads.

___ 12) Promise to pay - by signing this contract buyer agrees to pay Seller the "Total Due."

___ 13) Time of Essence - Time is the essence of this contract. Seller's acceptance of partial payments shall not in any manner modify the terms of this contract and such acceptance shall not be construed as a waiver of any subsequent default on Buyer's part nor shall it waive the "time is of the essence" provision.

___ 14) Notice - Any notice required to be given to Buyer shall be deemed reasonable notification if (1) mailed by ordinary mail, postage prepaid, to Buyer's mailing address as shown on this contract or to Buyer's most recent address as shown by a "notice of change of address" on file with Seller, whether or not such notice is actually received by Buyer, or (2) if given in any other manner which results in Buyer's actual receipt of such notice.

___ 15) Bad Check - If Buyer pays Seller with a check that is dishonored or unpaid for any reason, Seller may, at Seller's sole option, terminate this contract and retake the vehicle, or make claims against Buyer on the check. In addition, Seller will charge a $25 returned check charge plus any actual charges assessed by Seller's financial institution resulting from such returned check.

___ 16) Attorney Fees - If it is necessary for Seller to take legal action to enforce any of Seller's rights under this contract, Buyer agrees to pay to the extent permitted by law, the Seller's reasonable attorneys' fees and court costs.

___ 17) General - This contract is governed by applicable federal law and the laws of the state of Arizona. Any provisions found to be invalid shall not invalidate the remainder hereof. Waiver of any default shall not constitute waiver or any subsequent default. All words used herein shall be construed to be of such gender and number as the circumstances require. The contract shall be binding upon Buyer's heirs, personal representatives, successors and assigns and shall inure to the benefit of Seller's successors and assigns. This contract constitutes the entire agreement between the parties with respect to the subject matter herein, and may not be altered or amended unless made in writing and duly executed by the seller.

___ 18) Cash Deposit - If Buyer fails or refuses to accept delivery of any Vehicle or product or fails to comply with this contract, Seller may keep any cash deposit as liquidated damages, to the extent not prohibited by law. The deposit may also be used to reimburse Seller for any expenses and losses Seller incurs or suffers as a result of Buyer's failure or refusal to accept delivery of the Vehicle or product or to comply with this contract. Such expenses and losses may include Seller's reasonable attorneys' fees.

___ 19) Non-Delivery - Seller is not liable for failure to deliver or for delay in delivering the Vehicle or other product where such failure or delay is due, in whole or in part, to any cause beyond Seller's control or without Seller's fault or negligence.

___ 20) Risk of Loss; Insurance - The risk of loss to the vehicle or any other items covered by this invoice passes to Buyer upon delivery of the vehicle or other goods to the Buyer at the address set forth on this invoice for shipment to Buyer or such other place of receipt designated by the Buyer. Buyer is responsible for maintaining its own theft and liability insurance coverage for the vehicle.

___ 21) Age - Buyer represents and warrants to Seller that buyer is over the age of majority and is fully competent to enter into this contract. Buyer acknowledges that Seller is relying on this representation in entering into and performing this contract.

___ 22) Limitation of Damages: It is understood and agreed that Seller's liability and Buyer's sole remedy, whether in contract, under any warranty, in tort (including negligence), in strict liability or otherwise shall not exceed the return of the amount of the purchase price paid by the Buyer, and under no circumstances shall Seller be liable for any special, incidental, punitive or consequential damages, including, but not limited to, property damage, damage to or loss of equipment, lost profits or revenue, costs of renting replacements and other additional expenses, even if Seller has been advised of the possibility of such damages.

___ 23) No liability for Buyer's negligence. Seller shall not be liable for any damages, losses or expenses as a result of Buyer's negligence, whether deemed active or passive and whether or not any such negligence is the sole cause of any such damage, loss or expense.

___ 24) Conditions of Sale

___ 25) It is the responsibility of the Buyer to insure the safety and safe operation of all items sold to Buyer.

___ 26) The mechanical fitness of the machine is the sole responsibility of the Buyer and operator.

___ 27) Buyer acknowledges that there are dangers and risks inherent in the operation and use of all off-road vehicles, including but not limited to the danger and risk of collision with natural and man-made objects and with other vehicles and recreational users. Buyer understands that personal injury, death, dismemberment, or property damage can occur from any type of operation of an off-road recreational vehicle. Buyer accepts and assumes full responsibility for all such dangers and risks and the possibility of personal injury, death, property damage, or loss resulting therefrom and from unsafe operation.

___ 28) It is highly recommended that the Buyer or operator of this vehicle: (i) wear a helmet and safety belts at all times during operation of the vehicle and (ii) attend a safety course in operating ATV's, Dirt Bikes, UTV's, or Dune Buggies.

Customer Signature_____ Date_____

Address_____ City_____ State_____ Zip_____ Phone _____

Dealer Signature _____ Date_____

Address_____ City_____ State_____ Zip_____ Phone _____

Vehicle_____ VIN #_____ Year_____

+1510 W. Bell De Mar Dr. Tempe, AZ. 85283 + Phone: 480.813.6363 - Fax: 480.813.6379 +

Must be on file to order parts

Team Joyner USA Limited Manufacturer's Defect Warranty

Team Joyner USA herby warrants that new Joyner Off-Road Vehicle purchased from an authorized Joyner dealer worldwide including the United States, Middle East, Europe, Canada, Germany, Spain, or wherever Joyner recreational vehicles are sold by an authorized dealer will be free from defects in material and workmanship for the period of time stated herein, subject to certain stated limitations. Purchasing a Joyner vehicle from a non-authorized Joyner dealer will be without a warranty

The Period of Warranty for Joyner Off-Road Vehicles shall be ninety (90) days from the date of purchase. The warranty can be voided during the 90 days if found that you have violated any of the below requirements.

During the Period of the Warranty any authorized Joyner dealer will evaluate, repair or replace any part adjudged defective by Joyner due to faulty workmanship or material from the factory. Parts used in warranty repairs will be warranted for the balance of the product's warranty period. All parts replaced under warranty become property of Team Joyner USA. Warranty only covers defective parts, no labor is included. Consumer will pay Joyner dealer direct for any labor charges.

General Exclusions from this warranty that will void the entire warranty shall include any failures caused by:

a. Competition or racing use.
b. Installation of parts or accessories that is not qualitatively equivalent to genuine Joyner parts.
c. Abnormal strain, neglect, or abuse.
d. Lack of proper maintenance.
e. Accident or collision damage.
f. Modification to original parts.
g. Damage due to improper transportation.
h. Adjustments from operations.
i. Damage caused by exceeding travel of vehicle.
j. Altering the vehicle in any manner.
k. Placing additional seats.
l. Turbo chargers and super chargers.
m. Adding electrical devices that cause electrical failure.
n. Damage caused by debris; rocks, riverbed, trees, etc.
o. Damage caused by rollovers due to improper operation of vehicle.
p. Climbing beyond the capacity of the vehicle.
q. Operating differential lockers in excess speed of 20 mph.
r. Abuse and improper operations.
s. Increasing size of the tire or wheel from the Joyner standard tire and wheel package.
t. Towing an additional vehicle using a winch for other uses other than pulling the vehicle it is attached to.

Specific Exclusions from this warranty shall include parts replaced due to normal wear or routine maintenance, such as spark plugs, oil, oil filter, air filter, brake shoes, CV Joints, CV Boots, Universal Joints, Cables, water damage to electrical equipment, clutches pressure plates and transmission gear from neglect or miss shifting.

The Customer's Responsibility under this warranty shall be to:

1. Operate and maintain the off road vehicle as specified in the appropriate owner's manual;
2. Give notice to an authorized Joyner dealer of any all apparent defects within ten (10) days after delivery, and make the machine available at that time for inspection and repairs at such dealer's place of business.
3. To operate to the intent of the vehicle use
4. Not to travel in and out of water that is more than twelve (12) inches deep.
5. To not operate at any time in salt water.
6. Not to jump the machine in any manner.
7. To follow all local and state safety regulations.
8. Not to alter the vehicle in any manner.
9. Not to install any additional seating.
10. To check all bolts and nuts prior to any ride.
11. Property clean and protect the cosmetics of the vehicle.

Additional Warranty Requirements:

1. An authorized Joyner dealer to perform a break in service at ten (10) hours or two hundred and fifty (250) miles which ever comes first. There must be a record that this has been conducted by an authorized dealer in order to obligate Joyner to use the warranty on the vehicles or parts.
2. A record of complete operator maintenance must be kept and at any time a Joyner dealer may request this record to qualify the repair under warranty.
3. All fluid must be changed per the operator's manual. On all transmission or engine failures, this record will be requested.
4. Pre-Delivery Inspection (PDI)
   On each Joyner vehicle a pre delivery inspection form is required. A Joyner dealer is required to perform his procedure with the consumer signing off on all items of the PDI form. It is the Joyner dealer's responsibility to ensure and sign off on the vehicle to its mechanical fitness and make sure all safety equipment is installed

correctly. The dealer, during their pre delivery inspection is required to use Tamper Proof paint in red, orange, or white to ensure all nuts and bolts are tightened to specifications. The form can be downloaded at www.teamjoynerusa.com or request them to be FedExed to you. It is also the consumer's responsibility that the dealer has performed this procedure. Consumers must, within ten (10) days after accepting the vehicle, notify Joyner at 1-866-441-6363 or email PDI@teamjoynerusa.com or fax to 480-813-6379 in writing that the dealer failed to properly deliver the vehicle to you on an authorized pre delivery inspection form. Failure to properly notify Joyner of this can Void the warranty or cause serious injury, death, dismemberment, or damage to the vehicle. Joyner is not responsible for the fitness of the vehicle or the safety of the vehicle if the PDI is not performed by the dealer.

Warranty Notification Procedures-

Joyner will only accept warranty claims on its prescribed form with an authorized dealer signing off that in fact the part should be covered under warranty. This from must be e-mailed or faxed in signed by a dealer. A current PDI form must be on file with Joyner with a dealer's signature and consumer signature accepting delivery of the vehicle order and agreeing to the mandatory liability releases. If dealer determines that the part is not under warranty, you have ten (10) days to dispute this in writing to dealer and Joyner. Consumers can not order warranty parts only authorized Joyner dealerships can.

Safety- You should acknowledge that you are entering a very hazardous sport and you could be injured, dismembered, or even loose your life. This could occur from operation failure to completely conduct operator's maintenance or failure to have your vehicle properly delivered to you on an authorized dealer Joyner PDI form. It is not the responsibility of Joyner or any of its affiliates to ensure your vehicle will not cause you to be injured, dismembered, or even loss of life. You, without any guaranty of warranty, enter into full awareness of the hazards. It is recommended that you wear proper protection to include Helmet, safety belt, safety netting over doorways and even hand and arm restraints to keep your full body inside the vehicle in case of a roll over. Joyner can not be responsible for any losses of life, limbs, or serious injury. It is recommended that you attend an off road safety course prior to operating this vehicle, or you have agreed to take all responsibilities of operator and passengers.

This warranty is not transferable

Emission Control System Warranty – Team Joyner USA also warrants to the ultimate purchaser and each subsequent purchaser of each 2006 and later model Joyner off road vehicles covered by this warranty that the vehicle is designed, built, and equipped so as to conform at the time of sale with all U.S. emissions standards applicable at the time of manufacture and that it is free from defects in materials and workmanship which would cause it not to meet these standards within the period listed immediately below. Failures other than those resulting from defects in material or workmanship which arise solely as a result of owner abuse and/or lack of proper maintenance are not covered by this warranty.

All models-thirty (30) months from the original purchase date.

If at anytime the emission related parts have been altered or removed, or the removal of the certificate that is fixed to the vehicle, the warranty will be null and void. This vehicle must conform to the regulations per EPA and CA Air Resource Board.

Team Joyner USA makes no other warranty of any kind, expressed or implied. All implied warranties of merchantability and fitness for a particular purpose which exceed the obligations and time limits stated in this warranty are hereby disclaimed by Team Joyner USA and excluded from this warranty.

Some States do not allow limitations on how long an implied warranty lasts, so the above limitation may not apply to you. Also excluded from this warranty is any incidental or consequential damages including loss of use. Some states do not allow the exclusion or limitation of incidental or consequential damages, so the above exclusion may not apply to you.

This warranty gives you specific legal rights, and you may also have other rights which vary from state to state.

Authorized Dealership

Team Joyner USA
1510 W. Bell De Mar Dr
Tempe, AZ 85242
1-866-441-6363

Name_____
Address_____
City, State, Zip_____
Phone_____
Signature_____

Parts Order Form
Warranty Claim Form

www.teamjoynerusa.com

90 Day Manufacturer Defects Only
Fax# (480) 813-6379
Email: parts@teamjoynerusa.com

OFFICE USE ONLY

Parts Department
Date Received:_____
Date Processed:_____
Date Shipped:_____
Order Complete
Yes ☐ No ☐
Invoiced to Factory
Yes ☐ No ☐

W/P- 3971

Order Date
_____

Dealer:_____
Contact Name:_____
Address:_____
City:_____ **ST:**_____ **Zip:**_____
Phone:_____

Customer Name:_____
Address:_____
City:_____ **ST:**_____ **Zip:**_____
Phone:_____

SALE DATE	DELIVERY DATE	YEAR	MODEL	VIN#	COLOR

SYMPTOMS:_____

QTY	ITEM #	PG. #	PART #	DESCRIPTION	COST	TOTAL	WARRANTY YES OR NO

Payment Method: Cash ☐ Check ☐ Visa ☐ Mastercard ☐ Discover ☐

Drivers License #_____ ST:____ EXP:_____
Card#_____ EXP:_____ ZIP:_____ CVC#_____
I authorize Team Joyner USA to charge my credit card.
Signature:_____ Date:_____

SUBTOTAL:_____

TAX:_____

SHIPPING COST:_____

TOTAL:_____

SHIPPING IS NOT INCLUDED ON PARTS ORDERS

Shipping Method: Ground ☐ 2Day ☐ Overnight ☐ Rush Service $25 Fee ☐

Dealers Signature:_____ Date Submitted:_____
Print Name Sign

WE ONLY ACCEPT FAX OR EMAIL ORDERS FOR PARTS-NO PHONE ORDERS!

Exceeding the capability of the machine can cause damage and will not be covered under warranty. Abuse or misuse will not be covered under warranty. The 90 day manufacturers warranty is for defective parts only, not parts that become inoperative from use.

NO ORDERS WILL BE PROCESSED WITH INCOMPLETE INFORMATION

It is the purpose of this form to determine that the customer is qualified for warranty parts. Please note that the following parts are not covered under warranty and are considered as wear parts.

CLUTCH CABLE, THROTTLE CABLE, CLUTCH, BRAKE PADS, MUFFLERS, SHOCKS, LIGHT BULBS, DIRT IN FUEL TANK, DIRT IN CARBURETOR, DAMAGE FROM JUMPING OR EXCEEDING TRAVEL OF MACHINE, THERMOSTAT, TIRE S AND WHEELS, ELECTRICIAL PARTS SUCH AS: ALTERNATOR, VOLTAGE REGULATOR

OFFICE USE ONLY

APPROVED or DECLINED BY:_____ DATE:_____
Yes ☐ No ☐ Yes ☐ No ☐ PRINT NAME SIGN

REMARKS:_____

Operational Failure ☐ Out of Warranty Period ☐ Operational Ware ☐ Pictures Required/Retrieve Part ☐

PDI MUST BE ON FILE TO PROCESS

SERVICE RECORD

Fax to 480-813-6379

No warranty parts can be ordered if not on file

authorized pre-paid service program at a participating dealership near you.

You can purchase the first year service programs that include 10, 40, 80, and 120 hour services. Inquire with your dealer. We recommend that you follow this service schedule to ensure safety and mechanical fitness of your Joyner recreational vehicle. Failure to have your vehicle serviced by an authorized service center or dealership can result in injury, death, or dismemberment.

Customer Name _____
Address _____
City _____ State _____ Zip _____
Email _____ Phone _____

Vehicle Information
Model _____ Year _____
Vin # _____ Color _____

	Date	Sign off	Miles	Remarks
Assembly				
EPA and CARB stickers				
Pre Delivery Inspection				
Customer Sign Off				
10 hour or 250 miles				
40 hour or 250 miles				
40 hour or 500 miles				
80 hour or 750 miles				
120 hour or 1000 miles				

Dealership Information

Name	Phone	Date

Monthly checks

Date	Date	Date	Date	Date	Date
_____	_____	_____	_____	_____	_____
_____	_____	_____	_____	_____	_____
_____	_____	_____	_____	_____	_____
_____	_____	_____	_____	_____	_____
_____	_____	_____	_____	_____	_____

Selling Dealership

Dealership Name _____
Address _____
City _____ **State** _____ **Zip** ____
Phone _____

This activates Warranty

Date of Purchase _____
Customer Signature _____

By signing you have agreed to all liability releases and understand warranty.

Preventative Maintenance and Service Log

	Dealership Responsibilities			Recommended Authorized Joyner Dealer or Service Center				Operators Responsibilities Also check prior to each ride			
120 Point Check	Assembly	Pre Delivery Inspection	Customer Initials	10 hour or 250 miles	40 hour or 500 miles	80 hours or 750 miles	120 hours or 1000 miles	Weekly	Monthly	Quarterly	Yearly
Engine											
1)Drive Belt				TA	TA	TA	TA		TA	TA	TA
2)Tighten Bolts On Engine				TA	TA	TA	TA	TA	TA	TA	TA
3)Engine Oil				RC	LF	LF	RC	LF	LF	LF	RC
4)Exhaust				TA	TA	TA	TA	TA	TA	TA	TA
5)Air Filter				RC	LF	LF	RC	LF	LF	LF	RC
6)Manifold Bolts				TA	TA	TA	TA			TA	TA
7)Pulley Bolts				TA	TA	TA	TA			TA	TA
8)Engine Mounts				TA	TA	TA	TA	TA	TA	TA	TA
9)Engine Breather Tube				IC	IC	IC	IC		IC		IC
10) Carburetor				TA	TA	TA	TA	TA	TA	TA	TA
11) All Nuts And Bolts				TA	TA	TA	TA	TA	TA	TA	TA
Transmission											
12) Transmission Fluid				RC	LF	LF	RC	LF	LF	LF	RC
13) Clutch Pedal				LF/TA	LF/TA	LF/TA	LF/TA	LF/TA	LF/TA	LF/TA	LF/TA
14) Clutch							RC				RC
15) Shifter				LF/TA	LF/TA	LF/TA	LF/TA			LF/TA	LF/TA
16) Transmission Function				IC	IC	IC	IC		IC	IC	IC
17) Clutch Mount				TA	TA	TA	TA		TA	TA	TA
18) Shifter Cables				LF/TA	LF/TA	LF/TA	LF/TA			LF/TA	LF/TA
19) Transmission Mounts				TA	TA	TA	TA		TA	TA	TA
20) All Nuts And Bolts				TA	TA	TA	TA	TA	TA	TA	TA
Ignition											
21) Coil				IC	IC	IC	IC	IC	IC	IC	IC
22) Distributor For Ignition				IC	IC	IC	IC	IC	IC	IC	IC
23) Plug Wires				IC	IC	IC	IC	IC	IC	IC	IC
24) Throttle Choke Cable				LF/TA	LF/TA	LF/TA	LF/TA	LF/TA	LF/TA	LF/TA	LF/TA
25) Idle				IC/TA	IC/TA	IC/TA	IC/TA	IC/TA	IC/TA	IC/TA	IC/TA
26) All Nuts And Bolts				IC	IC	IC	IC	IC	IC	IC	IC

IC= Inspect And Clean, TA: Tighten And Adjust If Needed, LF= Lubricate And Fill, RC= Replace Or Change

After completing make a copy for your records and fax to 480-813-6379

	Dealership Responsibilities			Recommended Authorized Joyner Dealer or Service Center				Operators Responsibilities Also check prior to each ride			
	Assembly	Pre Delivery Inspection	Customer Initials	10 hour or 250 miles	40 hour or 500 miles	80 hours or 750 miles	120 hours or 1000 miles	Weekly	Monthly	Quarterly	Yearly
Cooling System				IC/LF	IC/LF	IC/LF	RC	IC/LF	IC/LF	IC/LF	RC
27) Coolant Level											
28) Coolant Hose And Clamps				IC	IC	IC	IC	IC	IC	IC	IC
29) Radiator Mount Bolts				TA	TA	TA	TA	TA	TA	TA	TA
30) Radiator Cap				TA	TA	TA	TA	TA	TA	TA	TA
31) Fan				IC	IC	IC	RC	IC	IC	IC	RC
32) Hose Clamps				TA	TA	TA	TA	TA	TA	TA	TA
Fuel System											
33) Fuel Tank Cover				TA	TA	TA	TA	TA	TA	TA	TA
34) Breathe Hose And Joint				IC/TA	IC/TA	IC/TA	IC/TA	IC/TA	IC/TA	IC/TA	IC/TA
35) Fuel Hose				IC/TA	IC/TA	IC/TA	IC/TA	IC/TA	IC/TA	IC/TA	RC
36) Fuel Hose Clamps				TA	TA	TA	TA	TA	TA	TA	TA
37) Fuel Tank				IC	IC	IC	IC	IC	IC	IC	IC
38) Fuel Filter				IC	IC	RC	IC			IC	RC
39) Fuel Regulator				TA	TA	TA	TA	TA	TA	TA	TA
40) Fuel Pump				IC	IC	IC	RC		IC	IC	RC
Drive Train											
41) Axles				IC	IC	IC	IC	IC	IC	IC	IC
42) Cv Joint				IC	IC/LF	IC	RC			IC	RC
43) Drive Shaft				LF	LF	LF	LF		LF		LF
44) Cv Bouts				IC	IC	IC	RC	IC	IC	IC	RC
45) Spindle				TA	TA	TA	TA	TA	TA	TA	TA
46) Bearings				IC/LF	IC/LF	IC/LF	RC		IC	IC	RC
47) Castle Nuts				TA	TA	TA	TA	TA	TA	TA	TA
48) Cotter Pins				RC	RC	RC	RC	RC	RC	RC	RC
49) Differential Front				TA	TA	TA	TA	TA	TA	TA	TA
50) Differential Front Cable				TA/LF	TA/LF	TA/LF	TA/LF	TA/LF	TA/LF	TA/LF	TA/LF
51) Front Gear Oil				RC	LF	RC	LF	LF	LF	RC	RC

IC= Inspect And Clean, TA: Tighten And Adjust If Needed, LF= Lubricate And Fill, RC= Replace Or Change

	Dealership Responsibilities			Recommended Authorized Joyner Dealer or Service Center				Operators Responsibilities Also check prior to each ride			
	Assembly	Pre Delivery Inspection	Customer Initials	10 hour or 250 miles	40 hour or 500 miles	80 hours or 750 miles	120 hours or 1000 miles	Weekly	Monthly	Quarterly	Yearly
52) Differential Breather Tub Front				IC	IC	IC	IC	IC	IC	IC	IC
53) Differential Rear				TA	TA	TA	TA	TA	TA	TA	TA
54) Differential Rear Cable				TA/LF	TA/LF	TA/LF	TA/LF	TA/LF	TA/LF	TA/LF	TA/LF
55) Differential Breather Tub Rear				IC	IC	IC	IC	IC	IC	IC	IC
56) Rear Gear Oil				RC	LF	RC	LF	LF	LF	RC	RC
57) Axle Nuts				TA	TA	TA	TA	TA	TA	TA	TA
58) Wheel Studs Nuts				TA	TA	TA	TA	TA	TA	TA	TA
59) Ball Joint Bolts				TA	TA	TA	TA	TA	TA	TA	TA
60) 4x4 Lockers				IC/TA	IC/TA	IC/TA	IC/TA			IC/TA	IC/TA
Brakes											
61) Brake Pads				IC	IC	IC	RC	IC	IC	IC	RC
62) Brake Fluid Level				LF	LF	LF	RC	LF	LF	LF	RC
63) Rotors				IC	IC	IC	IC	IC	IC	IC	IC
64) Calipers				IC/TA	IC/TA	IC/TA	IC/TA	IC	IC/TA	IC/TA	IC/TA
65) Brake Lines				IC	IC	IC	IC	IC	IC	IC	IC
66) Master Cylinder				IC/TA	IC/TA	IC/TA	IC/TA	IC	IC/TA	IC/TA	IC/TA
67) Brake Pedal				LF/TA	LF/TA	LF/TA	LF/TA	LF/TA	LF/TA	LF/TA	LF/TA
68) Emergency Brake				IC	IC	IC	IC	IC	IC	IC	IC
69) Emergency Brake Cable				LF/TA	LF/TA	LF/TA	LF/TA	LF/TA	LF/TA	LF/TA	LF/TA
70) Emergency Brake Pads				IC	IC	IC	RC	IC	IC	IC	RC
71) Emergency Brake Fluid				LF	LF	LF	RC	LF	LF	LF	RC
72) Three Way Brake Valve				IC/TA	IC/TA	IC/TA	IC/TA	IC/TA	IC/TA	IC/TA	IC/TA
73) All Nuts And Bolts				TA	TA	TA	TA	TA	TA	TA	TA
74) Wire And Plugs				IC	IC	IC	IC	IC	IC	IC	IC
Electrical											
75) Battery				IC/LF	IC/LF	IC/LF	RC	IC/LF	IC/LF	IC/LF	RC
76) rnator				IC	IC	IC	IC	IC	IC	IC	IC
77) Starter				IC	IC	IC	IC	IC	IC	IC	IC

IC= Inspect And Clean, TA: Tighten And Adjust If Needed, LF= Lubricate And Fill, RC= Replace Or Change

Team joyner USA	Dealership Responsibilities			Recommended Authorized Joyner Dealer or Service Center				Operators Responsibilities Also check prior to each ride			
	Assembly	Pre Delivery Inspection	Customer Initials	10 hour or 250 miles	40 hour or 500 miles	80 hours or 750 miles	120 hours or 1000 miles	Weekly	Monthly	Quarterly	Yearly
78) Connection				IC	IC	IC	IC	IC	IC	IC	IC
79) Voltage Regulator				IC	IC	IC	IC	IC	IC	IC	IC
80) Gauges				IC	IC	IC	IC	IC	IC	IC	IC
81) Lighting				IC	IC	IC	IC	IC	IC	IC	IC
82) All Nuts And Bolts				TA	TA	TA	TA	TA	TA	TA	TA
83) Horn				IC	IC	IC	IC	IC	IC	IC	IC
Suspension											
84) Tires				IC	IC	IC	IC	IC	IC	IC	IC
85) Tire Air Pressure				TA	TA	TA	TA	TA	TA	TA	TA
86) Wheels And Bearing				LF/TA	LF/TA	LF/TA	LF/TA	LF/TA	LF/TA	LF/TA	LF/TA
87) A-Arms				TA	TA	TA	TA	TA	TA	TA	TA
88) Swing Arms				TA	TA	TA	TA	TA	TA	TA	TA
89) Shocks Rear				IC/TA	IC/TA	IC/TA	IC/TA	IC/TA	IC/TA	IC/TA	IC/TA
90) Tighten Nuts On The Hub And Wheel				TA	TA	TA	TA	TA	TA	TA	TA
91) Shock Bolts				TA	TA	TA	TA	TA	TA	TA	TA
92) A-Arm Bolts				TA	TA	TA	TA	TA	TA	TA	TA
93) Tie Rod				TA	TA	TA	TA	TA	TA	TA	TA
94) Ball Joint				TA/LF	TA/LF	TA/LF	TA/LF	TA/LF	TA/LF	TA/LF	TA/LF
95) Hein Joints				TA	TA	TA	TA	TA	TA	TA	TA
96) Shocks Front				TA	TA	TA	TA	TA	TA	TA	TA
97) Nitrogen				TA	TA	TA	TA	TA	TA	TA	TA
98) All Nuts And Bolts				TA	TA	TA	TA	TA	TA	TA	TA
Steering											
99) Steering Wheel				TA	TA	TA	TA	TA	TA	TA	TA
100) Steering Box				TA/LF	TA/LF	TA/LF	TA/LF		TA/LF	TA/LF	TA/LF
101) Steering Rod Bolts				TA	TA	TA	TA	TA	TA	TA	TA
102) Ball Joints				TA/LF	TA/LF	TA/LF	TA/LF	TA/LF	TA/LF	TA/LF	TA/LF
103) Rod Ends				TA	TA	TA	TA	TA	TA	TA	TA
104) Hein Joint				TA	TA	TA	TA	TA	TA	TA	TA
105) All Nuts And Bolts				TA	TA	TA	TA	TA	TA	TA	TA

IC= Inspect And Clean, TA: Tighten And Adjust If Needed, LF= Lubricate And Fill, RC= Replace Or Change

	Dealership Responsibilities			Recommended Authorized Joyner Dealer or Service Center				Operators Responsibilities Also check prior to each ride			
	Assembly	Pre Delivery Inspection	Customer Initial	10 hour or 250 miles	40 hour or 500 miles	80 hours or 750 miles	120 hours or 1000 miles	Weekly	Monthly	Quarterly	Yearly
Chassis											
106) Welds				IC	IC	IC	IC	IC	IC	IC	IC
107) Roll Bar Connection				IC/TA	IC/TA	IC/TA	IC/TA	IC/TA	IC/TA	IC/TA	IC/TA
108) Floor Panels				TA	TA	TA	TA	TA	TA	TA	TA
109) Skid Plates				TA	TA	TA	TA	TA	TA	TA	TA
110) Winch Function				IC	IC	IC	IC	IC	IC	IC	IC
111) Winch Mount				TA	TA	TA	TA	TA	TA	TA	TA
112) Seat Belts				TA	TA	TA	TA	TA	TA	TA	TA
113) Seat Belt Mounts				TA	TA	TA	TA	TA	TA	TA	TA
Cosmetics											
114) Body Kits				IC/TA	IC/TA	IC/TA	IC/TA	IC/TA	IC/TA	IC/TA	IC/TA
115) Hood				IC/TA	IC/TA	IC/TA	IC/TA	IC/TA	IC/TA	IC/TA	IC/TA
116) Dump Bed				IC/TA	IC/TA	IC/TA	IC/TA	IC/TA	IC/TA	IC/TA	IC/TA
117) Safari Rack				IC/TA	IC/TA	IC/TA	IC/TA	IC/TA	IC/TA	IC/TA	IC/TA
118) Light Bar Rack				TA	TA	TA	TA	TA	TA	TA	TA
119) Dash Panel				TA	TA	TA	TA	TA	TA	TA	TA
120) Seats				TA	TA	TA	TA	TA	TA	TA	TA

IC= Inspect And Clean, TA: Tighten And Adjust If Needed, LF= Lubricate And Fill, RC= Replace Or Change

Warranty can be voided by Joyner or dealership if the proper maintenance and service has not been conducted

The service record must be faxed in when requesting warranty parts effective 2-15-08. No exceptions!!!!

Fax 480-813-6379

Release of liability required to be on file to order parts.
We reserve the right at any time to not sell or supply parts to the dealer or consumer for any reason.

Owner’s manual

Foreword

Thank you for choosing JOYNER off Highway Recreational Vehicle. We hope you will have fun with it. Before you start to operate the Vehicle, please read through this Owner’s Manual carefully as it contains important safety and maintenance information. Failure to follow the warnings contained in this manual can result in serious injuries.

Be sure to follow the recommended maintenance schedule and service your Off Highway Recreational Vehicle accordingly. Preventative maintenance is extremely important to the longevity of your Off Highway Recreational Vehicles.

JOYNER believes in conservation and protection of earth’s natural resources. To that end, we encourage every vehicle owner to recycle, trade in, or properly dispose of, as appropriate, used motor oil, coolant, and other fluids, batteries, and tires.
We hope you will have a pleasant experience with our products.

Foreword about safety

In order to keep everyone safe, you must take responsibility for the safe operation of your Off Highway Recreational Vehicles.

To help you make informed decisions about safety, we have provided operating procedures and other information on labels and in this manual. This information alerts you to potential hazards that could hurt you or others.

It is not practical or possible to warn you about all hazards associated with operating or maintaining a Off Highway Recreational Vehicle. You must use your own good judgment.

You will find important safety information in a variety of forms, including:

Safety labels - On the Vehicles.

Safety Messages – Preceded by a safety alert symbol ⚠ and one of two signal words: **WARNING**, or **CAUTION**.

These signal words mean:

⚠ WARNING

Physical harm may result from failure to adhere to the instructions that are described within the WARNING labels.

Safety Headings --- such as Important Safety Reminders or Important Safety Precautions.

Safety Section --- such as Off Highway Recreational Vehicles Safety.

Instructions --- how to use this Off Highway Recreational Vehicles correctly and safely.

This entire manual is filled with important safety information----please read it carefully.

Important safety information

Your Vehicle will provide you with many years of service and pleasure. Providing you take responsibility for your own safety and understand the challenges you can meet while driving.

There is a lot you can do to protect yourself when you drive. You'll find many helpful recommendations throughout this manual. The following are a few that we consider most important.

Follow the Age Recommendation

It is strongly recommended that no one under the age of 16 be permitted to drive this Off Highway Recreational Vehicles without adult supervision.

Always Wear a Helmet

It's a proven fact: helmets significantly reduce the number and severity of head injuries. Always wear an approved motorcycle helmet. We also recommend that you wear eye protection, sturdy boots, gloves, and other protective gear.

Drive Off-Road Only

Your Off Highway Recreational Vehicles is designed and manufactured for off-road use only. The tires are not made for pavement, and the Off Highway Recreational Vehicles does not have turn signals and other features required for use on public roads.

Take Time to Learn & Practice

Even if you have driven other Off Highway Recreational Vehicles, take time to become familiar with how this Off Highway Recreational Vehicles works and handles. Practice in a safe area until you build your skills and get accustomed to this Off Highway Recreational Vehicles's size and weight.

Because many accidents involve inexperienced or untrained drives, we urge all drivers to take a training course approved by the Off Highway Recreational Vehicles Safety Institute. Check with your dealer for more information on training courses.

Be Alert for Off-Road Hazards

The terrain can present a variety of challenges when you drive off-road. Continually "read" the terrain for unexpected turns, drop-offs, rocks, ruts, and other hazards. Always keep your speed low enough to allow time to see and react to hazards.

Drive within Your Limits

Pushing limits is another major cause of Off Highway Recreational Vehicles accidents. Never drive beyond your personal abilities or faster than conditions warrant. Remember that alcohol, drugs, fatigue, and inattention can significantly reduce your ability to make good judgments and driver safely.

Don't Drink and drive

Alcohol and driving don't mix. Even one drink can reduce your ability to respond to changing conditions, and your reaction time gets worse with every additional drink. So don't drink and drive, and don't let your friends drink and drive either.

Never run your Go- Vehical indoors.

Y the exhaust from the engine contains a tasteless, odorless and poisonous gas

called carbon monoxide.

Important safety information

Keep away from moving parts of the Off Highway Recreational Vehicles

The operator of the Off Highway Recreational Vehicles should never place their hands or other parts of their body near any moving part of the Off Highway Recreational Vehicles. Failure to adhere to this warning will cause physical harm to your body.

Skidding or Sliding

The terrain surface can be a major factor affecting turns, Skidding a turn is more likely to occur on slippery surfaces such as snow, ice, mud and loose gravel. If you skid on ice, you may lose all directional control. To avoid skidding on slippery terrain, keep you speed low and drive carefully.

Safety lables

A this section presents some of the most important information and recommendations to help you drive your Off Highway Recreational Vehicles safely, please take a few moments to read these pages.

The labels are considered permanent parts of the Off Highway Recreational Vehicles. If a label comes off or becomes hard to read, contact your dealer for warning labels

replacements.

Are you ready to drive?

Before each drive, you need to make sure you and your Off Highway Recreational Vehicles are both ready to drive. To help get you prepared, this section discusses how to evaluate your driving readiness, what items you should check on your Off Highway Recreational Vehicles, and adjustments to make for your comfort, convenience, or safety.

Before you drive your Off Highway Recreational Vehicles for the first time, we urge you to do following:

- Read this owner's manual and the labels on your Off Highway Recreational Vehicles carefully.
- Make sure you understand all the safety messages.
- Know how to operate all the controls.
- Never drive this Off Highway Recreational Vehicles if under 16 years old.

Before each drive, be sure:
- You feel well and are in good physical and mental condition.
- You are wearing an approved motorcycle helmet (with chin strap tightened securely), eye protection, and other protective clothing.
- You don't have any alcohol or drugs in your system.

Protective Apparel

For your safety, we strongly recommend that you always wear an approved motorcycle helmet, eye protection, boots, gloves, long pants, and long-sleeved shirt or jacket whenever you drive.

Although complete protection is not possible, wearing proper gear can reduce the chance of injury when you drive.

The following suggestions will help you choose the proper driving gear.

Helmets and Eyes Protection

Your helmet is your most important piece of driving gear because it offers the best protection against head injuries. A helmet should fit your head comfortably and securely.

An open-face helmet offers some protection, but a full-face helmet offers more. Regardless of the style, look for a DOT (Department of Transportation) sticker in any helmet you buy. Always wear a face shield or goggles to protect your eyes and help your vision, date 070202.

⚠ WARNING

Operating this Off Highway Recreational Vehicles without wearing an approved motorcycle helmet, eye protection, and protective clothing could increase your chances of head and/or eye injury, possibly death in the event of severe accident.

Always wear approved motorcycle helmet that fits properly and wear eye protection (goggles or face shield), gloves, boots, long-sleeved shirt or jacket and long pants.

Additional Driving Gear

In addition to a helmet and eye protection, we also recommend:
- Sturdy off-road motorcycle boots to help protect your feet, ankles, and lower legs.
- Off-road motorcycle gloves to help protect your hands.
- Driving pants with knee and hip pads, a driving jersey with padded elbows, and a chest/shoulder protector.

Drive Training

Developing your driving skills is an on-going process. Even if you have driven other Off Highway Recreational Vehicless, take time to become familiar with how this Off Highway Recreational Vehicles works and handles. Practice driving the Off Highway Recreational

Vehicles in a safe area to build your skills. Do not drive in rough terrain until you get accustomed to the Off Highway Recreational Vehicles's controls, and feel comfortable with its size and weight.

⚠ WARNING

Operating Off Highway Recreational Vehicles without proper instruction could increase your risk of an accident which could lead to serious injury or death.

⚠ WARNING

Attempt supporting with your hands to the ground when the Vehical turning over could lead to serious injury or death.
Never support with your hands to ground when the Vehicles will turn over.

Age Recommendation

It is strongly recommended that no one under the age of 16 be permitted this Off Highway Recreational Vehicles without adult supervision.

⚠ WARNING

A child driving a Off Highway Recreational Vehicles that is not recommended for his/her age could lose Off Highway Recreational Vehicles control and result in severe injury or death.
A child under 16 should have adult supervision when operate on the Off Highway Recreational Vehicles.

No Alcohol or Drugs

Alcohol, drugs and Off Highway Recreational Vehicles don't mix. Even a small amount of alcohol can impair your ability to operate a Off Highway Recreational Vehicles safely. Likewise, drugs, even if prescribed by a physician, can be dangerous while operating a Off Highway Recreational Vehicles. Consult your doctor to be sure it is safe to operate a vehicle after taking medication.

⚠ WARNING

Operating this Off Highway Recreational Vehicles after consuming alcohol or drugs can seriously affect your judgment, cause you to react more slowly, affect your balance and perception, and could result in serious injury or death.
Never consume alcohol or drugs before or while operating this Off Highway Recreational Vehicles.

Is your vehicle ready to drive?

Before each drive, it is important to inspect your Off Highway Recreational Vehicles and make sure any problems you find are corrected. A pre-drive inspection is a must, not only for safety, but because having a breakdown, or even a flat tire, can be a major inconvenience.

If your Off Highway Recreational Vehicles has overturned or has been involved in a collision, do not drive it until your Off Highway Recreational Vehicles has been inspected by your dealer, There may be damages or other problems you cannot see.

⚠ WARNING

Improperly maintaining this Off Highway Recreational Vehicles or failing to correct a problem before driving can cause a crash in which you can be seriously hurt or die.

Always perform a pre-drive inspection before every drive and correct any problems.

Pre-drive Inspection

Check the following items before you get on the Off Highway Recreational Vehicles:

Engine Oil

Check the level and add oil if needed. Check for leaks.

Coolant

Check the coolant and add coolant if need. Check for the leaks.

Fuel

Check the level and add fuel if needed. Also make sure the fuel fill cap is securely fastened. Check for leaks.

Tires

Use a gauge to check the air pressure. Adjust if needed. Also look for signs of damages or excessive wear.

Nuts & Bolts

Check the wheels to see that the axle nuts are tightened, Use a wrench to make sure all accessible nuts, bolts, and fasteners are tight.

Pre-drive Inspection

Underbody & Exhaust System

Check for, and remove any dirt, vegetation or other debris that could be fire hazard or interfere with the proper operation of the Off Highway Recreational Vehicles.

Air Cleaner

Check the air filter. Replace it if needed.

Leaks, Loose Parts

Walk around you Off Highway Recreational Vehicles and look for anything that appears unusual, such as a leak or loose cable.

Lights

Make sure the headlight, brake light and tail light are working properly.

Throttle

Check the free play and adjust if needed. Press the throttle to make sure it moves smoothly without sticking, and snaps back automatically when it is released.

Clutch cable

Check the free play of clutch cable and adjust if needed. Press the clutch cable to make sure it moves smoothly without sticking, and snaps back automatically when it is released.

Brakes

Press the brake pedal several times, check for proper brake pedal free play. Make sure there is no brake fluid leakage.

Engine Stop

When engine is running, turn the switch key counterclockwise. Make sure engine stops.

Steering Wheel

Check that the wheels turn properly as you turn the steering wheel.

Cable

Check the cable housing for wear. Check the fittings are tight. Replace or tighten as needed.

Tie rod

Check the tie rod housing for wear. Check the fittings are tight. Replace or tighten as needed.

Safe driving precautions

Off-road use only

You’r Off Highway Recreational Vehicles and its tires are designed and manufactured for off-road use only, not for pavement. Driving on pavement can affect handling and control. You should not drive your Off Highway Recreational Vehicles on pavement.

⚠ WARNING

Operating this Off Highway Recreational Vehicles on paved surfaces may seriously affect handling and control of the Off Highway Recreational Vehicles, and may cause the vehicle to go out of control.

Never operate the Off Highway Recreational Vehicles on any paved surfaces, including sidewalks, driveways, parking lots and streets.

When driving off-road, also remember to always obey local off-road driving laws and regulations. Obtain permission to drive on private property. Avoid posted areas and obey “no trespassing” signs.

You should never drive your Off Highway Recreational Vehicles on public streets, roads or highways, even if they are not paved. Drivers of street vehicles may have difficulty seeing and avoiding you, which could lead to a collision. In many states it is illegal to operate Off Highway Recreational Vehicless on public streets, roads and highways.

⚠ WARNING

Operating this Off Highway Recreational Vehicles on public streets, roads or highways can cause collision with other vehicle.

Never operate this Off Highway Recreational Vehicles on any public streets, roads or highways, even a dirt or gravel one.

Keep Hands and Feet on Controls

Always keep both hands on the steering wheel and both feet on the foot controls. When driving your Off Highway Recreational Vehicles. It is important to maintain your balance and control of the Off Highway Recreational Vehicles. Removing hands or feet away from the controls can reduce your ability to react and control the vehical.

⚠ WARNING

Removing hand from Steering wheel or feet from foot controls during operation can reduce your ability to control the Off Highway Recreational Vehicles or could cause you to lose your balance and fall off the Off Highway Recreational Vehicles.

Always keep both hand on the steering wheel and both feet on the foot controls of your Off Highway Recreational Vehicles during operation.

Control Speed

Driving at excessive speed increases the chance of an accident. In choosing a proper speed, you need to consider the capability of your Off Highway Recreational Vehicles, the terrain, visibility and other operating conditions, plus your own skills and experience.

⚠ WARNING

Operating this Off Highway Recreational Vehicles at excessive speeds increases your changes of losing control of the Off Highway Recreational Vehicles, which can result in an accident.

Always drive at a speed that is proper for your Off Highway Recreational Vehicles, the terrain, visibility and other operating conditions, and your experience.

Use Care on Unfamiliar or Rough Terrain

Before driving in a new area, always check the terrain thoroughly. Don't drive fast on unfamiliar terrain or when visibility is limited. (it's sometimes difficult to see obstructions like hidden rocks, bumps, or holes in time to react).

⚠ WARNING

Failure to use extra care when Operating this Off Highway Recreational Vehicles on unfamiliar terrain could result in the Off Highway Recreational Vehicles overturning or going out of control.

Go slowly and be extra careful when operating on unfamiliar terrain. Always be alert to changing terrain conditions when operating the Off Highway Recreational Vehicles.

Never drive past the limit of visibility. Maintain a safe distance between your Off Highway Recreational Vehicles and other off-road vehicles. Always exercise caution and use extra care on rough, slippery and loose terrain.

⚠ WARNING

Failure to use extra care when operating on excessively rough, slippery or loose terrain could cause loss of traction or vehicle control, which could result in an accident, including an overturn.

Do not operate on excessively rough, slippery or loose terrain until you have learned and practiced the skills necessary to control the Off Highway Recreational Vehicles on such terrain. Always be especially cautious on these kinds of terrain.

Do Not Perform Stunts

You should always operate your Off Highway Recreational Vehicles in a safe and reasonable manner. When driving, always keep all four wheels on the ground.

⚠ WARNING

Attempting wheelies and other stunts increases the chance of an accident, including an overturn.

Never attempt stunts, such as wheelies or jumps. Don't try to show off.

Specifications

DIMENSIONS

Overall Length----------113 in. (2880mm)
Overall Width ---------- 62 in. (1570mm)
Overall Height ---------- 70in. (1777mm)
Wheelbase ---------- 81 in. (2050mm)
Front Track ---------- 51 in. (1300mm)
Rear Track ----------51in. (1300mm)
Ground Clearance ---------- 11in. (280mm)

ENGINE

Type ---------- 2-Bore,4-Stroke, Liquid-cooled
Bore x Stroke ---------- 76mm×71mm
Displacement ---------- 644 cc
Compression ratio ----------8.4:1
Carburetor ---------- BJH101E or CSH101E
Max Power ----------20.6kw/5300rpm
Maximum Torque ----------44/2700~3300Nm/r/min
Starting ---------- Electric
Ignition ---------- C.D.I
Lubrication ---------- Force & Splash
Transmission ---------- manual clutch, 4 shift/Reverse
Spark Plug ---------- ----------F6T or F6TC
Plug gap ---------- 0.7±0.1mm
Fuel type ---------- RQ93 (unleaded)
Lubricate oil ---------- SAE-15W/30

CAPACITIES

Maximum load ---------- ----------200kg
Fuel tank ---------- 23.0L
Engine oil ----------2900ml
Coolant ----------4000ml
Starting ---------- <5s
Climbing ---------- 20°-25°
Battery ---------- 12V36Ah
Head Light ----------12V 150W/Both
Tail Light ---------- 12V 80W/Both
Fuse ----------30A

SPECIFICATIONS

Brake Track ---------- < 7m @ 20miles/h
Top speed ---------- 50 miles/h (or limited as customers require)

CHASSIS

Front, Rear brake ---------- Hydraulic disc, right foot control
Front tire ---------- 25×10-12
Rear tire ---------- 25×8-12
Front Suspension ---------- Independent Dual A-Arm
Rear Suspension ---------- Independent Dual A-Arm
Final Drive ---------- shaft driven

TIRE PRESSURE

Front ---------- 70kpa 0.7kg/c ㎡ 10psi
Rear ---------- 70kpa 0.7kg/c ㎡ 10psi

WEIGHT

Net Weight ----------460kg

WARRANTY

Parts and workmanship ---------- 90 Days

Operation

Operation controls

WARNING-Do not attempt to start or operate the engine until completely familiar with the location and use of each control necessary to operate this vehicle. The operator must know how to stop this machine before starting and driving it.

Throttle

The right foot pedal is the throttle that controls the Off Highway Recreational Vehicles speed. To disengage the clutch at any time, allow the throttle to return to the idle position. **(See Fig. 1)**

WARNING

Each time prior to starting the engine, check the throttle assembly to ensure that when pedal is pushed all the way forward the assembly is working smoothly and returns to idle when released. Do not operate if pedal or engine throttle linkage fail to return to idle. If unable to correct the problem through lubrication, adjustment or replacement of worn parts, contact your dealer for assistance.

Brake

The brake is located on the middle of the three control pedals (**See Fig. 1**). Applying pressure to the pedal applies pressure to the brake caliper around the brake disc at the front and rear wheels and slows or stops the vehical.

Clutch

The left foot pedal controls the clutch cable **(See Fig. 1)**. With the pedal down, you can shift the shift lever.

WARNING

Improper operation of the clutch will lead to excessive wear of the clutch friction surface.

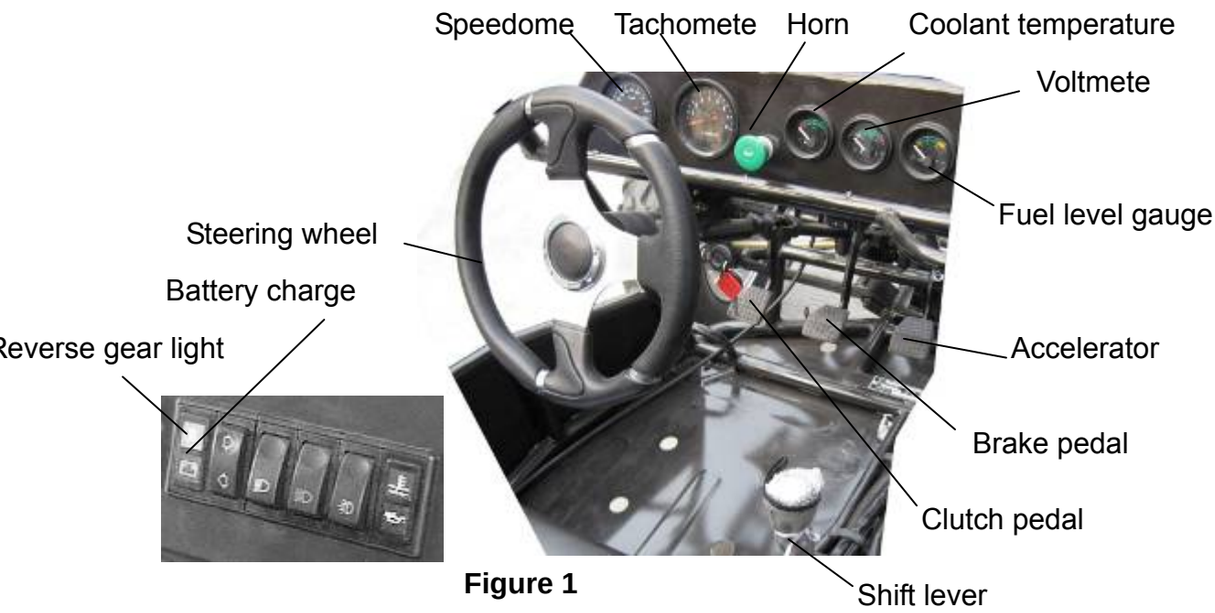

Figure 1

Start engine

1. Engage the park brake
2. Press the clutch pedal down, put the shift lever in neutral
3. Insert the key into the Ignition-switch

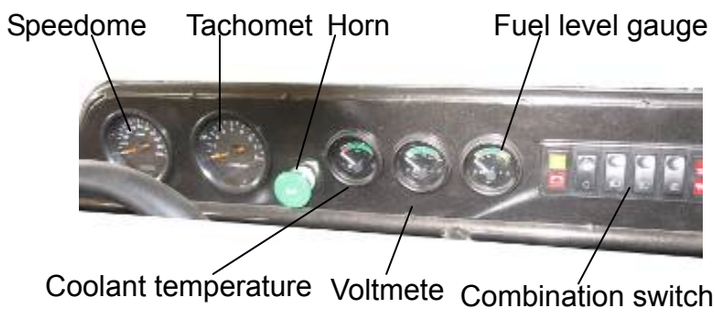

Figure 2

If the engine is cold

1. Pull the choke out fully
2. Press down the clutch pedal
3. Turn the key clockwise to the “on” position. Release the key and the clutch pedal when the engine starts.
4. Push the choke back slowly to allow the engine to run smoothly. Keep engine running for 1-2 minutes.
5. Push the choke back fully. If the idle of engine is not smooth, pull out the choke to find the best running position and keep running for a while long until the engine runs smooth without choke.

If the engine is warm

Press the throttle slightly and turn the key clockwise to the “on” position, release the key and the throttle when the engine starts.

WARNING

Each time prior to starting the engine, check the throttle assembly to ensure that when pedal is pushed all the way forward the assembly is working smoothly and returns to idle when released. Do not operate if pedal or engine throttle linkage fail to return to idle. If unable to correct the problem through lubrication, adjustment or replacement of worn parts, contact your dealer for assistance.

WARNING

Before you start the engine, check that the parking brake is engaged, and the gear shift lever is in neutral. Trying to start the engine in gear may damage the starter motor, clutch or gearbox.

WARNING

Release the key at once if the engine starts. Holding the key in start position when the engine is running will cause damage to the starter motor.

WARNING

If the engine does not start after 10 seconds, a second attempt to start the engine can be allowed. Improper operation will damage the engine.

Engine stop key

Stop key test.

Before driving this vehicle, test the Engine Stop key to assure that it is operating properly. With the engine running, turn the key counterclockwise to the “off” position for the engine to shut down.

Pre-Drive Inspection

WARNING

Perform this pre-drive inspection every day before driving vehicle. If not performed, serious damage to the vehicle or personal injury may result.

1. Check for Engine Oil Level. Check for transmission Oil Level. Check for leaks, add oil if required. (See page 35, Engine oil replacement, and page 36Transmission lubrication)
2. Check the coolant. Check for leaks, add the coolant if required. (See page36 Engine Coolant)
3. Check for Fuel Level. Add fuel as necessary and do not overfill. Check for leaks.(see Figure 3)

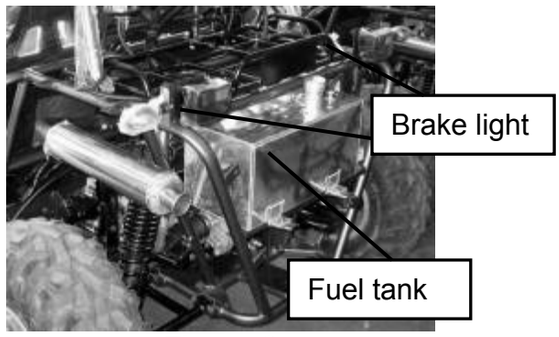

Figure 3

4. Check for Brakes. Depress the brake pedal several times, and then check for proper brake pedal free play. Make sure there is no brake fluid leakage. Adjust if necessary.

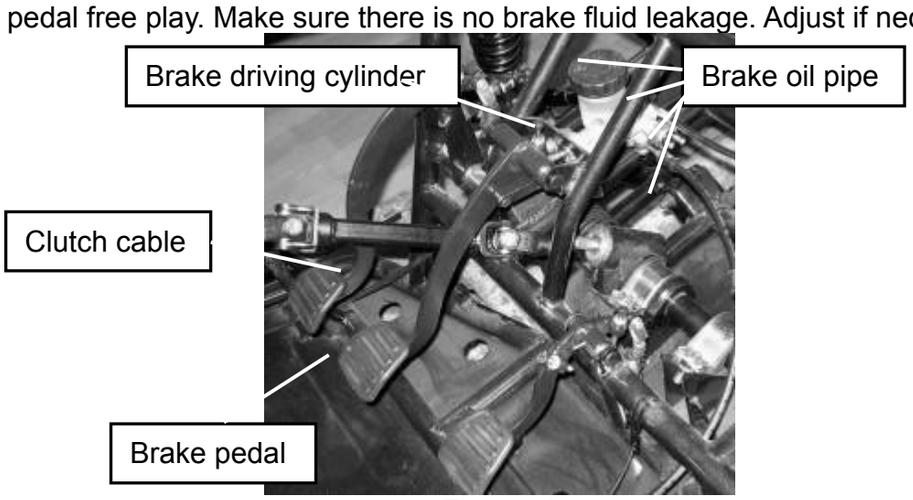

Figure 4

5. Check the clutch cable, Assure the cable snaps back and has a smooth operation. Ensure the clutch can operate smoothly. Adjust if necessary, or replace the clutch if necessary. (See Figure 4)
6. Check Tires. Check tires condition and pressure. The pressure on both Front and Rear tire is 12psi.(see Figure 5)

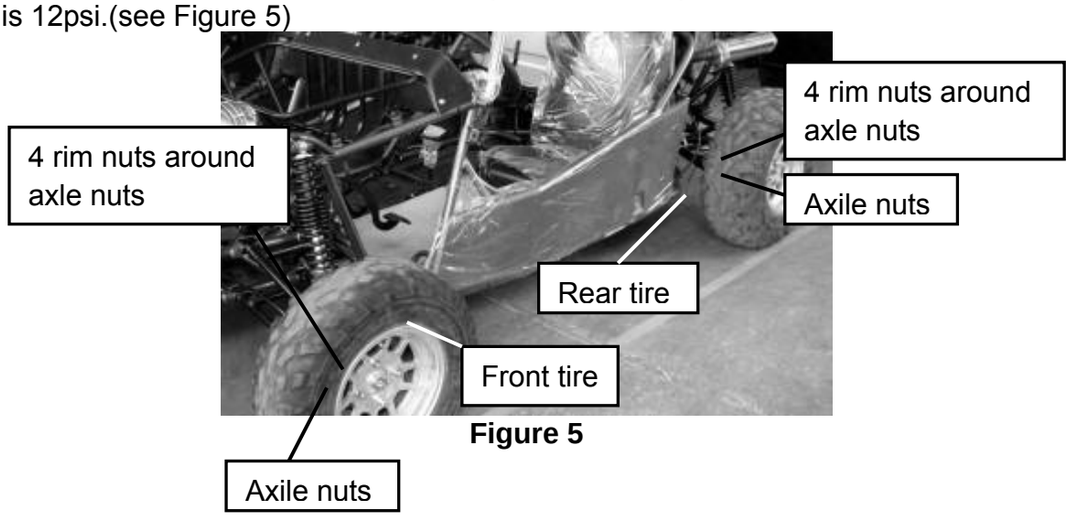

Figure 5

7. Check Throttle. Check for smooth operation. Ensure the throttle “snaps” back to idle. (See Figure 4)
8. Check Engine Stop key. Perform engine stop key test. Repair as necessary. (See page30 Engine stop key)
9. Check all Nuts, Bolts, and fasteners. Check wheels to see that all axle nuts and rim nuts are tightened properly. Check and tighten as necessary all other fasteners to specified torque.
10. Check Roll Bars. Ensure all protective roll cage bars are in place before operating the Off Highway Recreational Vehicles. (See page **Error! Bookmark not defined.** 错误！未找到引用源。)
12. Check Brake Light. Check for proper operation. (Figure 4)
13. Check Wheels. Check for tightness of wheel nuts and axle nuts; check that axle nuts are secured by cotter pins. (See Figure 4)
14. Check Steering. Check for free operation and for any unusual looseness in any area.(see Figure 6)

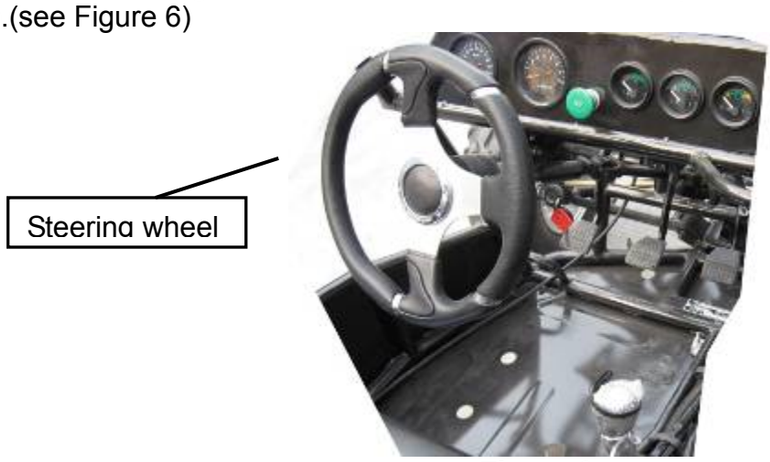

Figure 6

WARNING

Always follow rules for safe operation and wear a helmet.

Passengers

The vehicle allows for two riders only. Combined maximum weight of driver and the passenger should not exceed 180kg or 400lbs.

Seat

The seat must always be securely fastened in the position which best allows the operator control of the foot pedals, steering wheel, and the remote stop key.

Figure 7

A. Pull seat adjustment handle upward to disengage seat slide.
B. Move seat to desired position.
C. Be sure seat adjustment handle snaps back into place and that seat is locked into

position. (**See** Figure 7)

⚠ WARNING

Before attempting to adjust the seat ensure that engine of the Off Highway Recreational Vehicles is stopped.

⚠ WARNING

Never operate this Off Highway Recreational Vehicles when the provided seat is not securely fastened, to do so could result in a strong possibility of severe personal injury or loss of life. Before attempting to adjust the seat ensure that engine of Off Highway Recreational Vehicles is stopped.

Parking

Park brake "OFF"

Figure 9

Park brake "On"

Figure 8

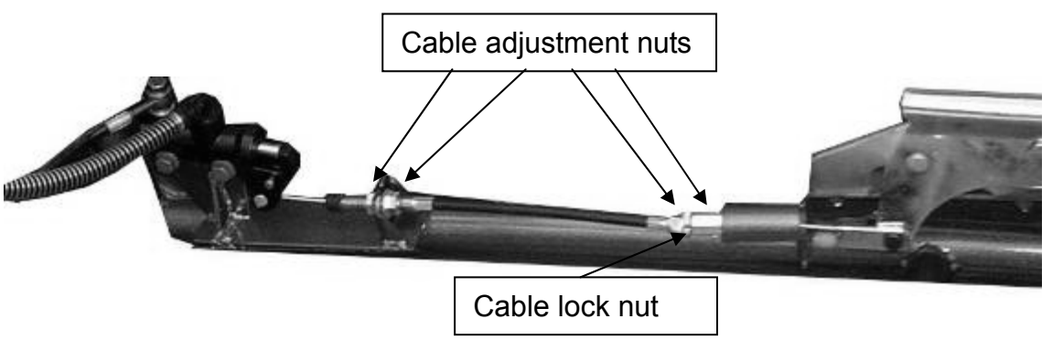

Figure 10

a. Pull the park brake lever up so that the unit can engage park brake.
b. To release the unit, press button on front end of parking lever then push the parking lever to the bottom.
c. Adjust the parking cable if necessary. As the figure shown, adjust the adjustment nuts to make sure the cable tight, and then tighten lock nuts.

Gear Shift

Figure 11

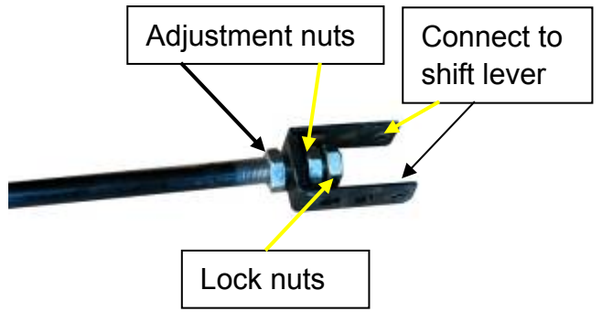

Figure 12

1. Operate the gear shift as the picture shown. and the max speed in every gear position is shown as the following form（see Figure 11）

Gear position	Max speed
1st	26 km/h
2nd	37km/h
3rd	50 km/h
4th	80km/h
R	32 km/h

Figure 13

2. Adjust the adjustment nuts shown in the above picture, if necessary. To make sure the shift lever right position. (see Figure 12)

Break-in

The first month is most important in the life of your vehicle. Proper operation during this break-in period will help assure maximum life and performance from your new vehicle. The following guidelines explain proper break-in procedures.

1. After the engine starts, the engine is not allowed in high speed in the neutral gearshift.
2. Drive vehicle from stop to low speed slowly.
3. Avoid braking strongly.
4. Do not exceed the vehicle speed on the below schedule

The speed of vehicle	The first 1000 km		
Max speed in each gear	1st	Gear	15 km/h
	2nd	Gear	25km/h
	3rd	Gear	40 km/h
	4th	Gear	70km/h

Figure 14

Starting and Operating Instructions

a. Before starting the engine, be sure that the driver is seated properly in the Off Highway Recreational Vehicles and tighten the seatbelt.

b. Testing the Off Highway Recreational Vehicles in a open place at the beginning to learn how to start, turn and stop.

c. Operate the Off Highway Recreational Vehicles slowly until you are familiar with it.

d. The turning radius of this Off Highway Recreational Vehicles is small and agile, so the centrifugal force is very high when turning at high speed. Slow down to a more controllable speed when turning to prevent the Off Highway Recreational Vehicles from

rolling over.

e. To prevent vehicle from rolling over, be sure to only turn the vehicle at a slow more controllable speed.

Service instructions

Air filter

Service air cleaner every 80 hours

NOTE: Service more often under dusty conditions.

Remove filter cover,

Check the filter cover and the air filter for dusty,

If necessary, clear the filter cover and the filter with special liquid or replace them with a new one. (**See** Figure 15)

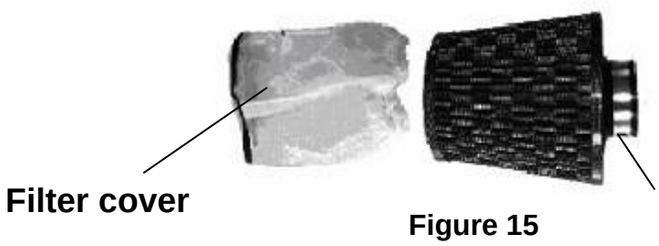

Figure 15

Engine oil replacement

You must change the oil in the crankcase refer to preventative maintenance and service log. That will insure proper lubrication of internal parts and prevent costly repairs due to excessive wear.

Figure 17

Figure 16

Figure 19

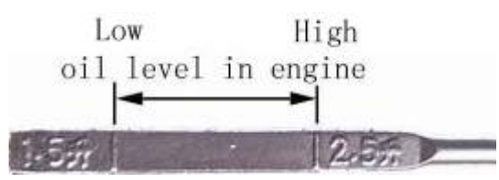

Figure 18

With the engine warm, put the vehicle on the level ground.

a. Shut down the engine; put a collecting oil plate under the engine oil outlet. Loosen the oil outlet plug in the warm engine. Let the engine oil out fully **(see** Figure 17**).**

b. Tighten the engine oil outlet plug.
c. Remove the oil filler cap **(see** Figure 16**),** fill oil (**SAE 10W/10～50)** about 2.8 liters to the engine.
d. Pull out the engine oil dip stick **(see** Figure 16**),** confirm the corrective oil level in the crankcase **(see** Figure 19**).**

Check engine oil and recharge

a. If the color of engine oil changes, you need to replace the engine oil. Replace the engine oil as above.
b. Check the engine oil level, change if necessary from **d** as above.

Transmission lubrication

You must change the oil in the transmission after the first 5 hours of operating of your new engine and after 10 hours of use thereafter. That will insure proper lubrication of internal parts and prevent costly repairs due to excessive wear.

Figure 21

Figure 20

a. Put the vehicle on the level ground.
b. Shut down the engine, put a collecting oil plate under the transmission oil outlet. Loosen the oil outlet plug in the warm engine. Let the transmission oil out fully **(see** Figure 20**).**
c. Remove the iron dust plug, this plug has a magnet on it. Iron dust caused by moving parts will stick to the plug. Clean the iron dust from this dust plug.
d. Tighten the transmission oil outlet plug and the iron dust plug.
e. Remove dipstick of transmission **(see Fig. 14),** fill oil (**GL5 80W/90)** about 1.9 liters.
f. Insert the transmission dipstick**,** check the oil level in the transmission. Confirm the corrective oil level in the transmission **(see** Figure 21**).**

Check transmission oil

If the color of transmission oil changes, you need to replace oil. Replace transmission oil as above.

Engine Coolant

You must check the coolant for level and leaks. If it is low, you need to refill coolant into the radiator (approximately 4L). The lack of coolant will cause the engine to overheat. This can cause engine damage.
The coolant should always be topped up, since the coolant can evaporate.

Figure 22

Figure 23

Put the vehicle on level ground.

1. Turn the coolant cap counterclockwise and open the cap **(see** Figure 22 Figure 23**)**.
2. Pour fresh coolant to filler neck.
3. Start the engine at idle.
4. Increase the engine rev's a few times
5. Repeat 2,3,4 till the coolant is at neck and no bubbles come up.
6. Refit the coolant cap, turn it clockwise and tighten it
7. Turn the reserve coolant case cap counterclockwise and open the cap **(see** Figure 22 Figure 23**)**.
8. Pour fresh coolant of the specified type into the reserve coolant tank till the coolant reaches 2/5 to 3/5 of the reserve coolant tank volume.
9. Close the reserve coolant case cap, turn it clockwise and tighten it

Top up the reserve coolant

If the coolant in the reserve tank is less than 2/5, it needs to be topped up.

⚠ WARNING

Opening the radiator cap while the engine is hot can be hazardous.

Opening the radiator cap can spray the high temperature coolant in your eyes, face and any parts of your body. This can result in severe injury.

Never open the radiator cap while the engine is hot.

⚠ WARNING

New and used coolant can be hazardous.

Children and pets may be harmed by new or used coolant.

Continuous or brief contact with coolant may be dangerous for your health.

Keep new and used coolant away from the children and pets. To minimize your exposure to new and used coolant, wear a long sleeve shirt and moisture-proof gloves(such as dishwashing gloves) when you change coolant. If coolant contacts your skin, wash thoroughly with soap and water. Wash any clothing or rags if wet with coolant. Recycle or properly dispose of used coolant.

WARNING

Harm or damage may occur if use coolant that does not meet the specification 50% standard green coolant and 50%distill water.

Spark Plug

a. Remove the spark plug and inspect it each time you change the oil.
(Use a spark plug wrench) The electrodes should be kept clean and free of carbon.
The presence of carbon or excess oil will greatly reduce proper engine performance.
If possible, check the spark plug gap (area between electrodes) using a wire feeler gauge. This specification is 0.025”~0.030”.
b. Before installing spark plug coat threads lightly with graphite grease if possible, to ensure easy removal next time the spark plug needs inspection **(see** Figure 24**)**.

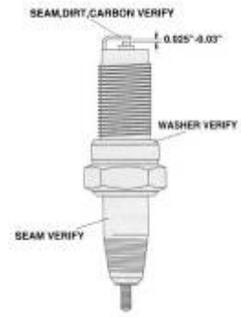

Figure 24

c. It is advisable to replace the spark plug at least once a year to insure easy starting and good engine performance.

Carburetor Adjustment

Never make unnecessary adjustments. The factory recommended settings are correct for most applications. It’s not necessary to disassemble the screw unless the carburetor needs to be replaced. Prepare a 50r/w tachometer before adjustment.

a. Warm up the engine (5~10min)
b. Tighten the air screw gently. Back out 2-3/8 turns counter clockwise **(see** Figure 25**)**.
c. Connect the tachometer, adjust the throttle to limit the idle speed. The standard value is (1400RPM).
d. Turn the air screw counter slowly and observe the RPM of the engine, stop adjusting as the RPM reaches the top speed.
e. Adjust the screw and adjust the idle speed to an ideal value.
f. Repeat step **d** and **e** until the rotate speed of engine stables.

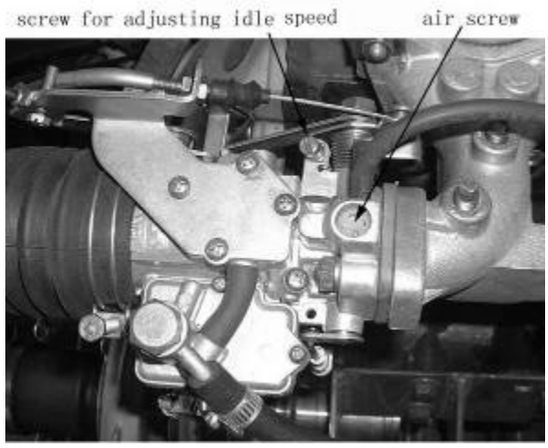

Figure 25

Cleaning Instructions

Keep your vehical clean. With a clean rag, wipe off and dirt and oil from around controls. Wipe off any spilled fuel and oil. Keep the engine clean of foreign object and be sure to check that air intake fan is free of debris for proper cooling.

Vehicles Lubrication

Lubricate vehicle every 90 days of use, Apply several drops of oil in specific points shown as following picture

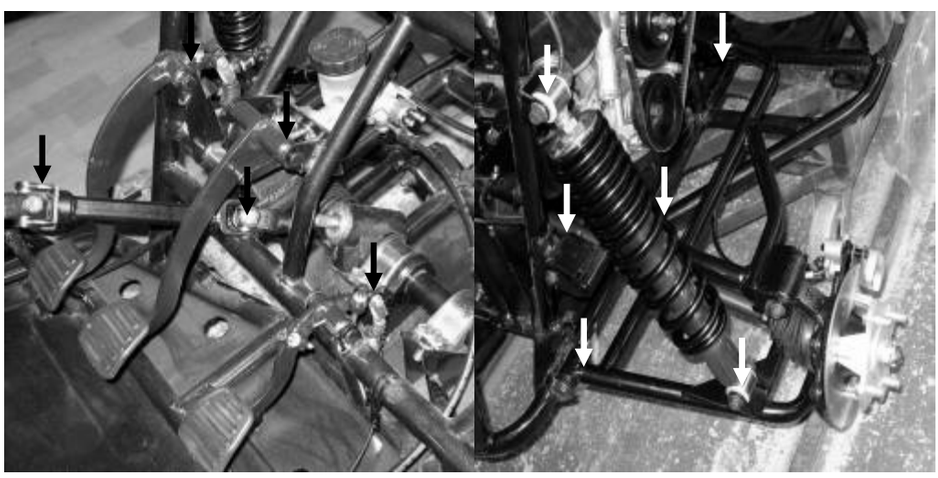

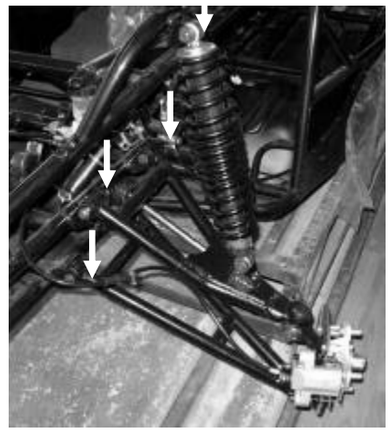

Storage Instruction

In the event your vehical is not to be operated for periods in excess of 30 days or at the end of each driving season prepare for storage as follows:

a. Drain fuel tank and carburetor by allowing engine to run out of fuel, or use a fuel stabilizer.
b. Lubricate engine cylinder by removing the spark plug and pour one ounce of clean lubricating oil through the spark plug hole into the cylinder. Crank the engine slowly to spread oil and replace spark plug.
c. Do not save or store gasoline over winter. Using old gasoline, which has deteriorated from storage, will cause hard starting and affect engine performance.

⚠ WARNING

Do not drain fuel while engine is hot. Be sure to move Off Highway Recreational Vehicles outside before draining fuel.

Repair

Front Wheel Replacement

Do not disassemble the center castle nuts when you replace the front wheels.

(**See** Figure 26) Tighten the nuts after replacing the wheels.

Castle nuts

Torque:180±5 N.M

Wheel nuts

Torque:70±5 N.M

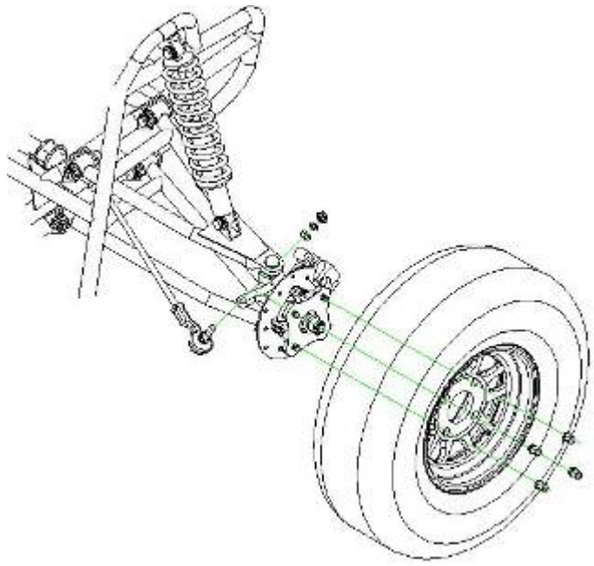

Figure 26

Rear Wheel Replacement

Do not disassemble the center castle nuts when you replace the rear wheels.

(**See** Figure 27) Tighten the nuts after replacing the wheels.

Castle nuts

Torque:180±5 N.M

Wheel nuts

Torque:70±5 N.M

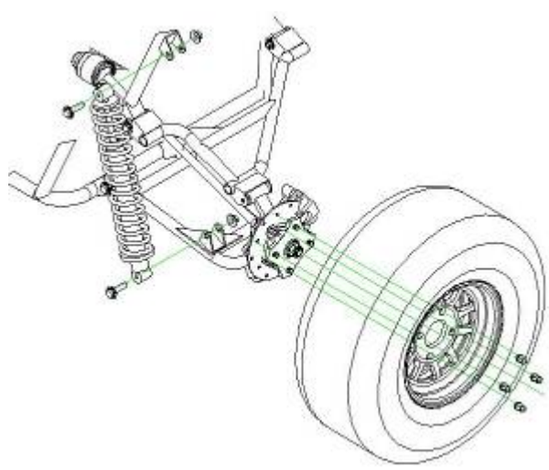

Figure 27

Clutch replacement

Do not remove the whole engine from vehicle when you replace the clutch, but you'll need to remove rear suspension, driven shaft, clutch cable, muffler, wires and rubber cushion that is in the middle of transmission and frame.

1. Remove bolt M14 (**See** Figure 28)

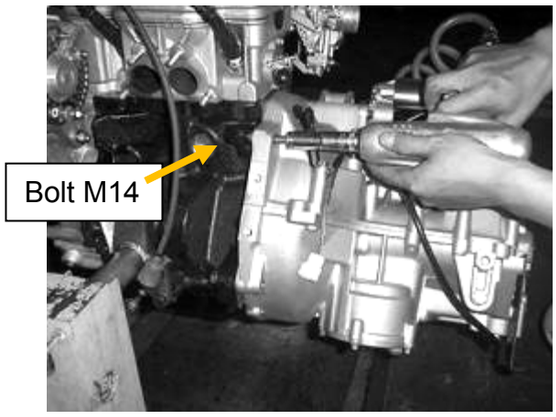

Figure 28

2. Remove two bolts (M12) on the starter (**See** Figure 30), Remove the starter (**See** Figure 29)

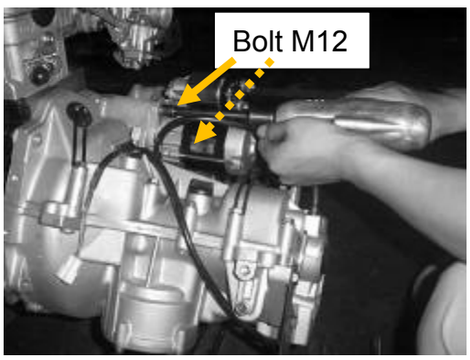

Figure 30

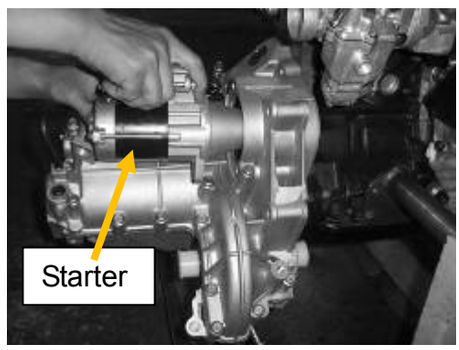

Figure 29

3. Remove two nuts (M14) on two side of transmission (**See** Figure 31**,**Figure 32)

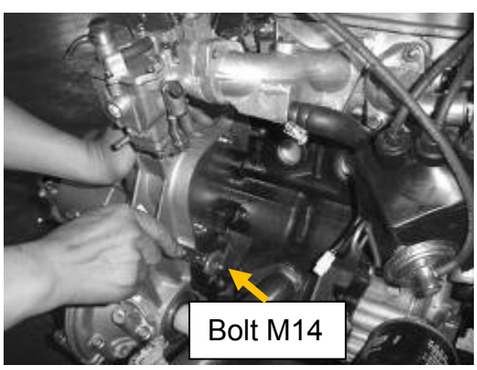

Figure 32

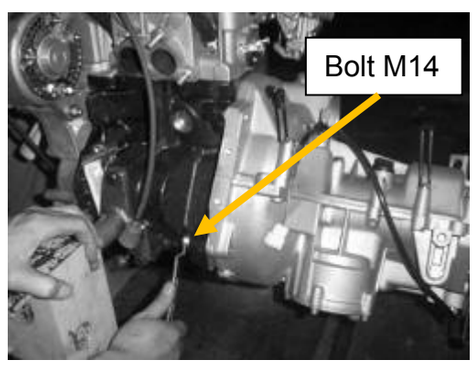

Figure 31

1. Remove two bolts(M8) on the lower mud plate of transmission (**See** Figure 33**,**Figure 34)

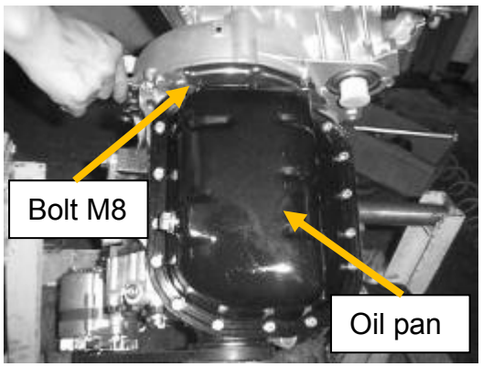

Figure 34

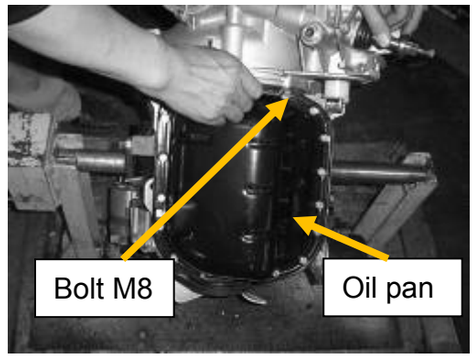

Figure 33

2. Remove the lower mud plate (**See** Figure 35).

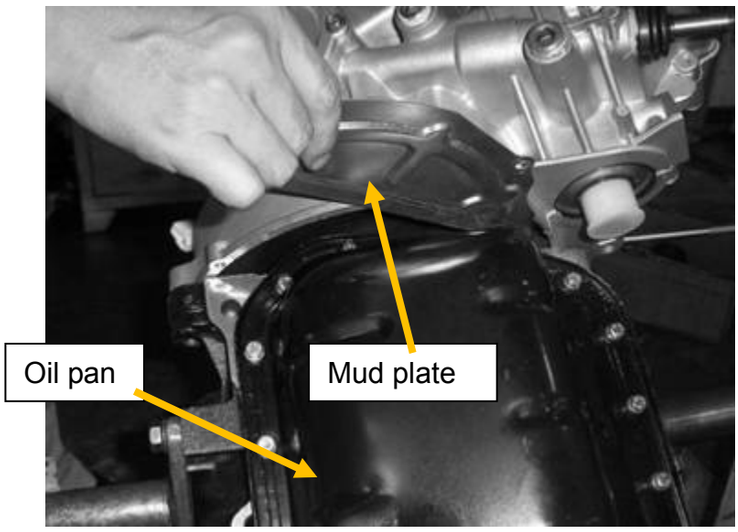

Figure 35

3. Remove the transmission (**See** Figure 36**,**Figure 37)

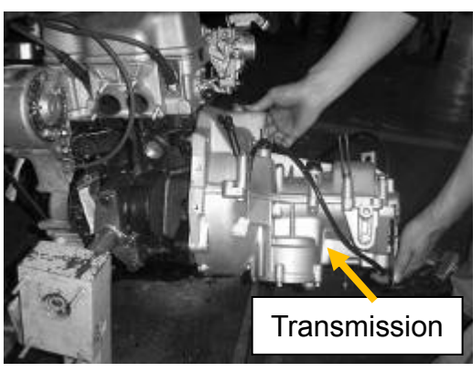

Figure 37

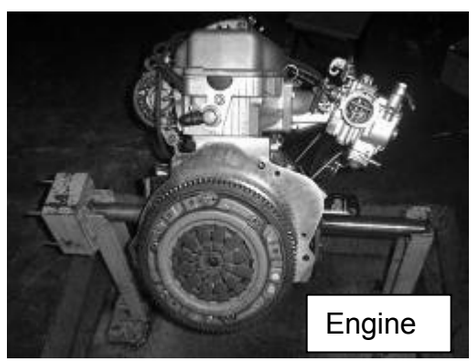

Figure 36

4. Remove upper mud plate (**See** Figure 38)

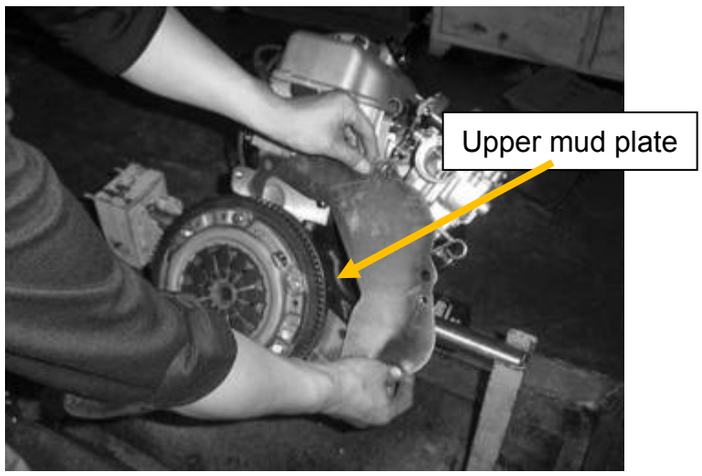

Figure 38

5. Insert the aligning shaft into hole (**See** Figure 40). Remove six bolts on the pressing plate of clutch (**See** Figure 39)

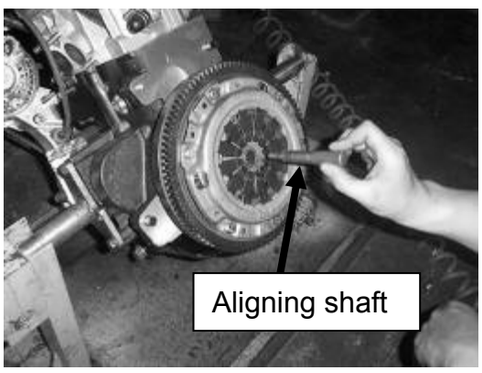

Figure 40

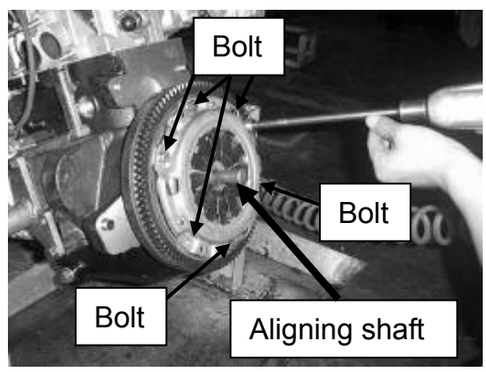

Figure 39

6. Remove the pressure plate (**See** Figure 42).
   Remove the friction disc of clutch (**See** Figure 41**,**Figure 43)

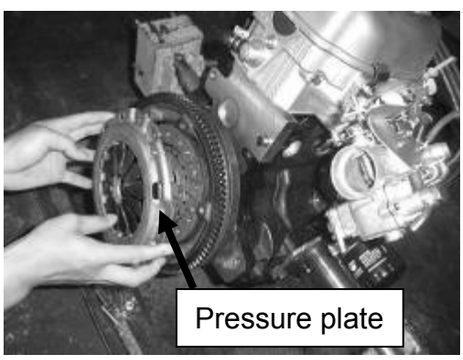

Figure 42

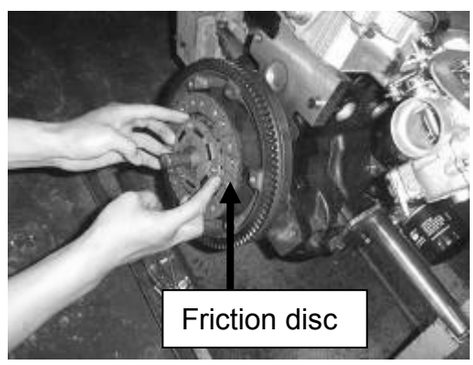

Figure 41

Figure 43

10. Insert the aligning shaft into the hole; align new friction plate to the flywheel of engine (**See** Figure 44**,**Figure 45).

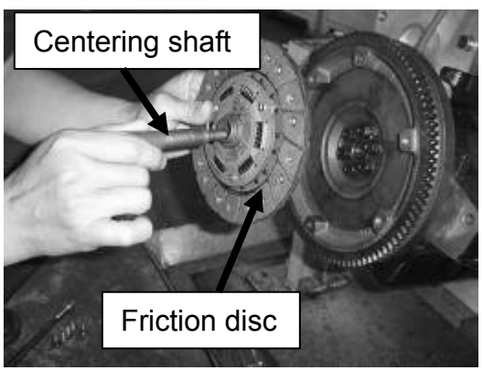

Figure 45

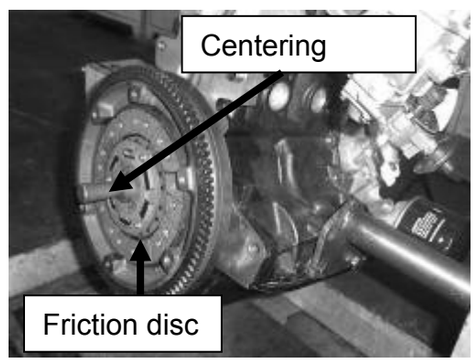

Figure 44

10. Fix pressure plate of clutch. Two bolts with “Y.G” mark must be inserted into two anchor holes. Tighten six bolts with torque 30 N.m (**See** Figure 46**,**Figure 47**)**.

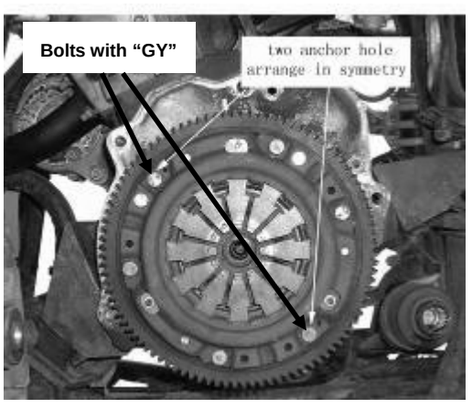

Figure 47

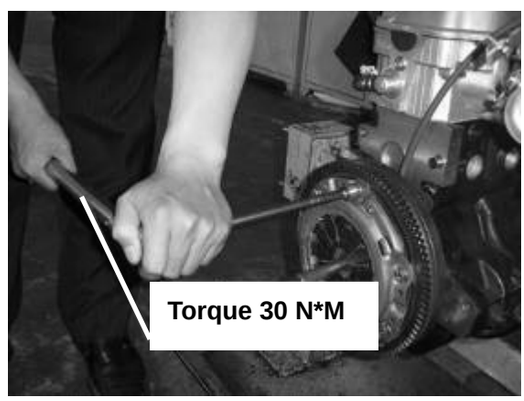

Figure 46

12. Fix upper mud plate (**See** Figure 48**,**Figure 49Figure 49)

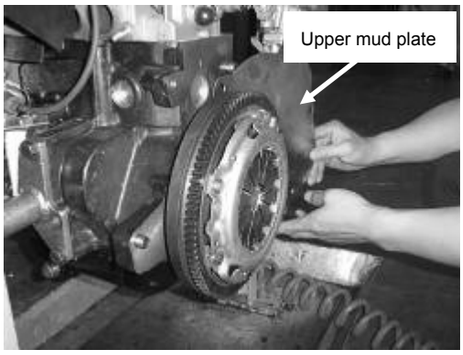

Figure 49

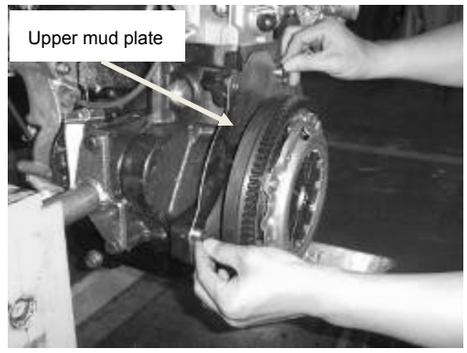

Figure 48

13. Fix parts according to reverse operation to the disassembly

Timing setup and balancing shaft setup

1. When the first piston locates top dead center, make sure the mark on camshaft timing sprocket wheel in the position shown as the following figure.
2. Make a mark between two holes as the Figure 51, and turn the left balancing shaft sprocket, make sure the mark on the balancing shaft sprocket aligned to the mark made at the beginning of this step.
3. Make a mark about 30mm above the bolt as the Figure 52, and turn the right balancing shaft sprocket; make sure the mark on the balancing shaft sprocket aligned to the mark made at the beginning of this step.
3. Fix guide plate, and tension plate
4. Fix the sprocket. Mark on the sprocket must be in straight line to the single white link on the timing chain. (See Figure 53)

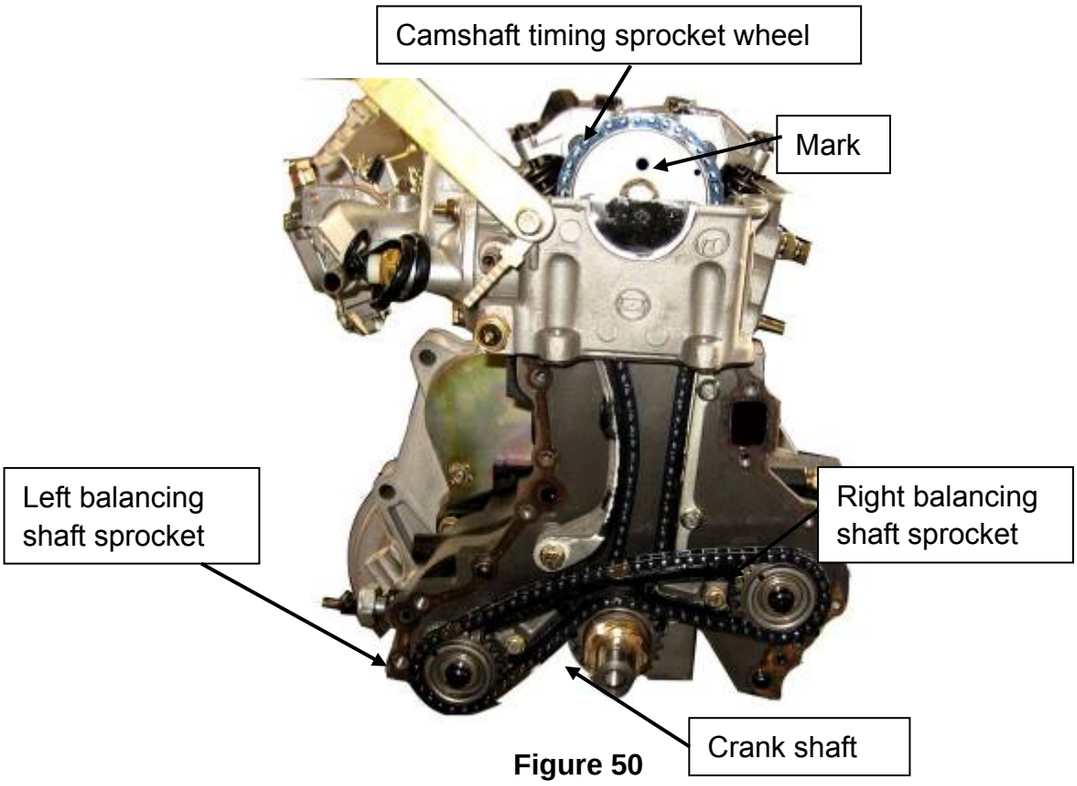

Figure 50

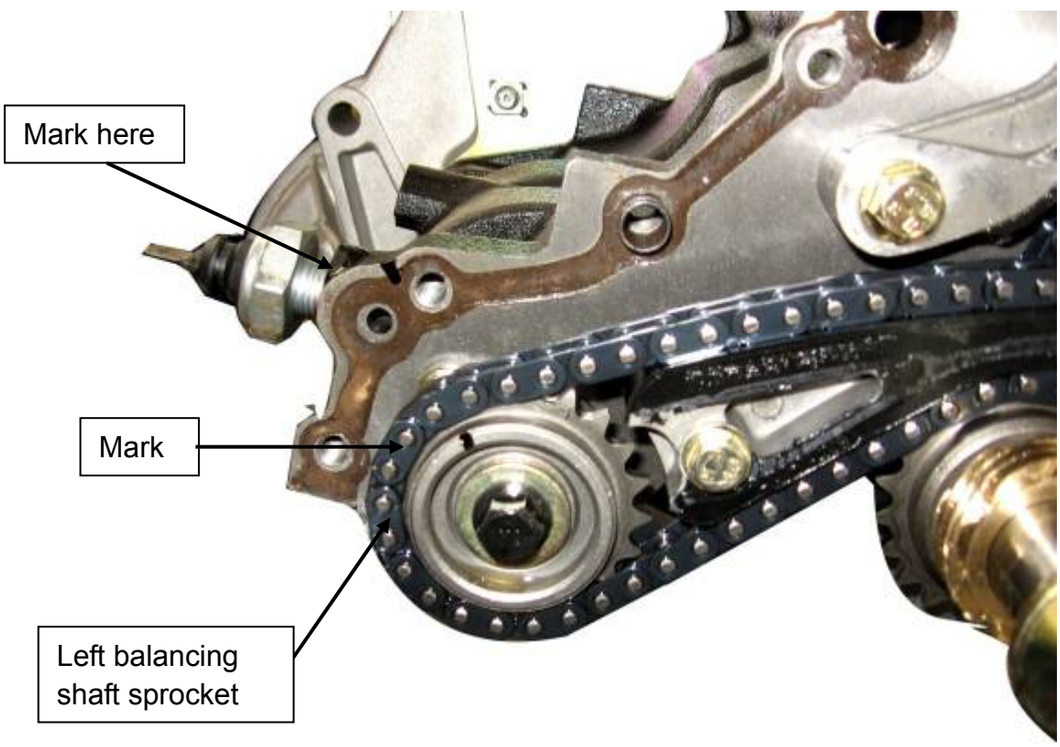

Figure 51

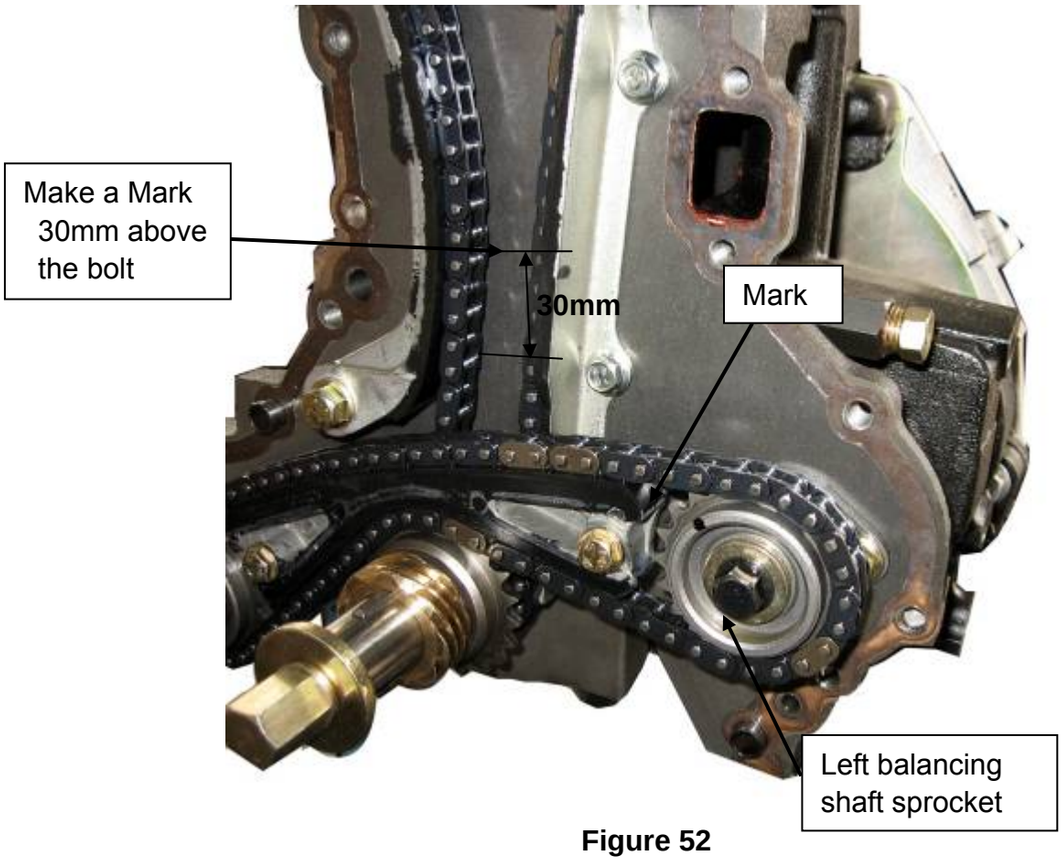

Figure 52

Water pump disassembly

1. Take off fan belt and loosen 4 bolt tightening water pump pulley.

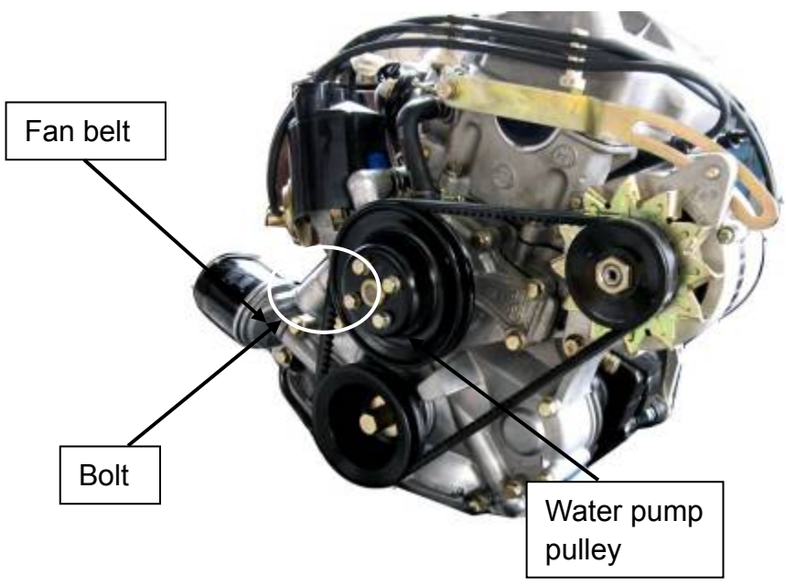

Figure 53

2. Loosen the 6 bolts shown as the Figure 54.

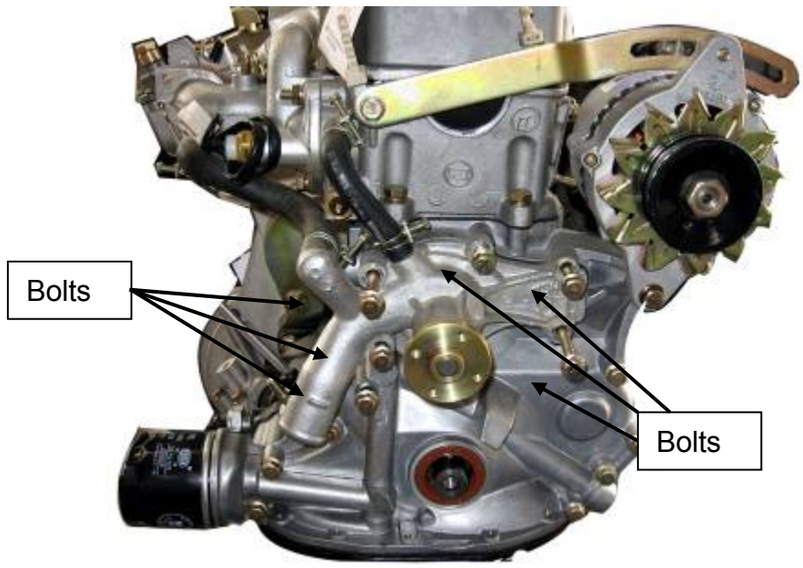

Figure 54

3. Loosen the clamp bolts shown as Figure 55, and disconnect two peace of water pipe, and take off the water pump. The engine without water pump is shown as Figure 55.

Figure 55

Figure 56

Distributor replacement

1) Turn around the crank shaft, align the line on the pulley of crankshaft straight to the 0 degree line on the cover of engine (**See** Figure 57**,**Figure 58**,**Figure 59)

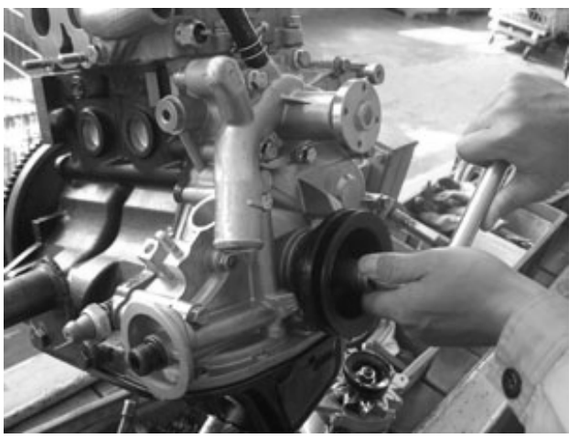

Figure 58

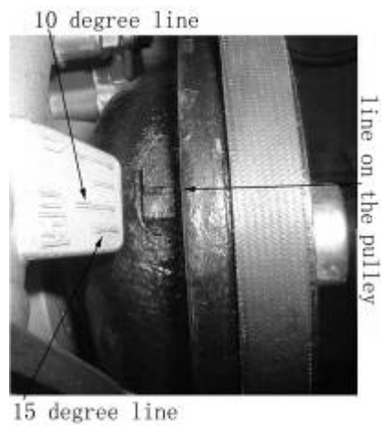

Figure 57

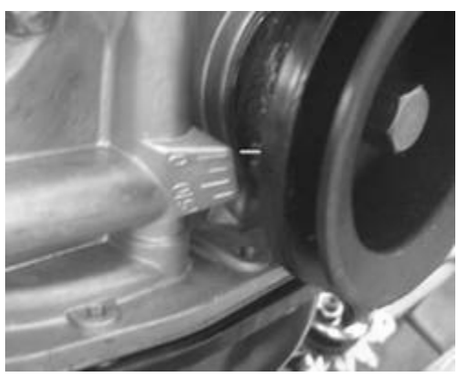

Figure 59

2) Remove the rocker cover of head by removing two bolts (**See** Figure 60)

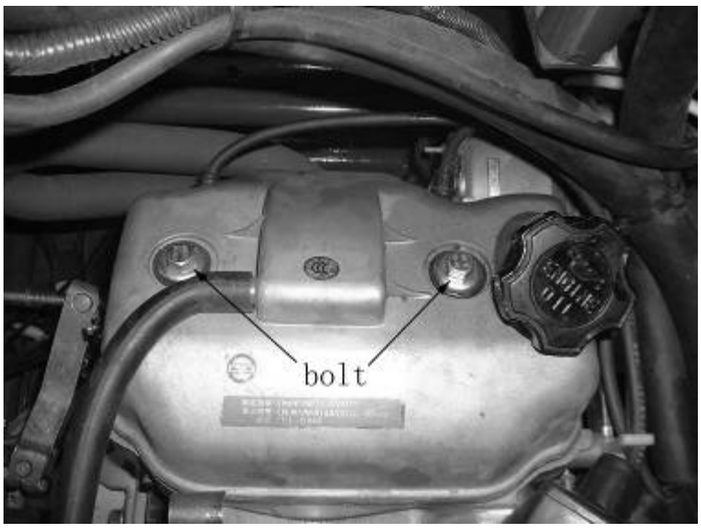

Figure 60

3) Check the anchor hole, if it is not on the direction shown by Fig. Repeat above 1 as to obtain the hole position shown by Figure 53.

4) Insert the screwdriver into the hole, turn the drive of oil pump shaft until parallel to the crankshaft (**See** Figure 62**,**Figure 63)

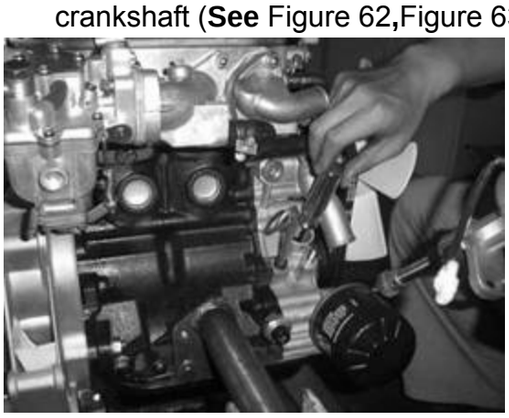

Figure 62

Figure 61

5) Align the mark 2 on the shaft of distributor to the mark 1 on the aluminum housing (**See** Figure 63)

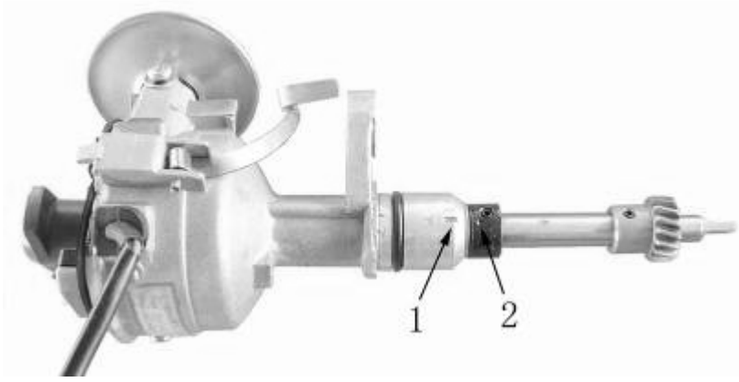

Figure 63

6) Insert the distributor slowly to the hole (**See** Figure 64). Confirm the direction of distributor is as per the figure (**See** Figure 65**,**Figure 66**)**. Tighten the nut of distributor housing.

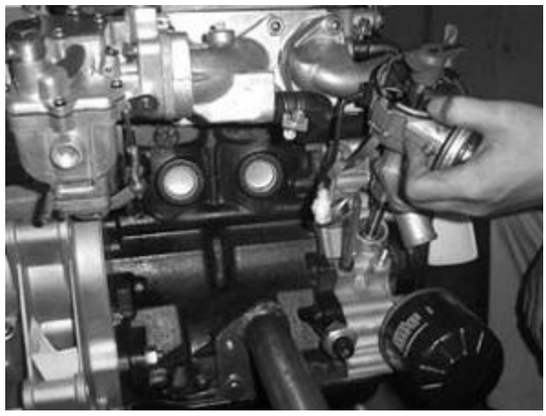

Figure 64

Figure 66

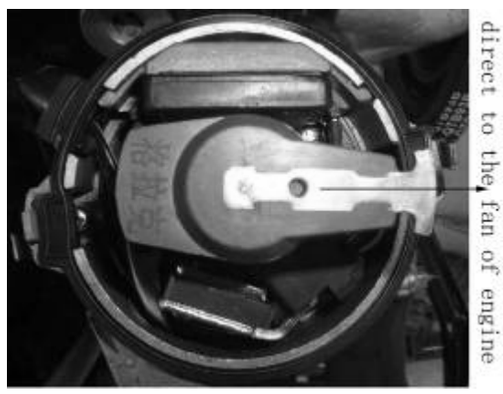

Figure 65

7) Fix the cover of the distributor (**See** Figure 67).

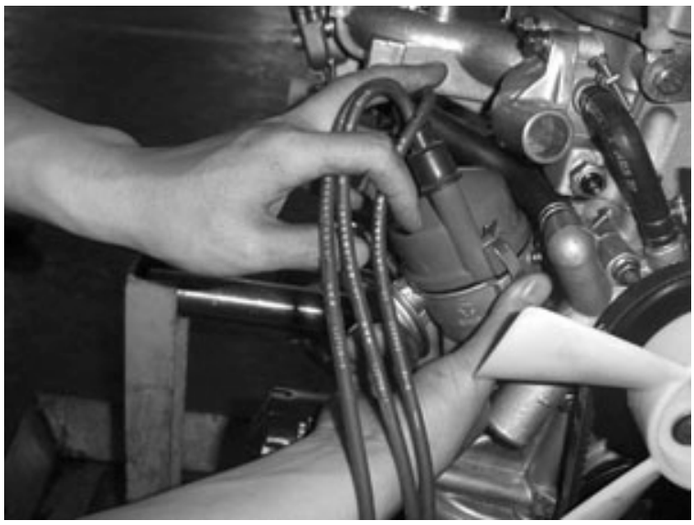

Figure 67

8) Check the spark timing. Adjust if need as followings
a) Loosen the nut of the distributor housing
b) Turn the distributor slowly. Increase the spark timing by counterclockwise turn. Decrease the spark timing by clockwise turn.

A. Gear shift
1) Install thick pivot plate and short crank to shifter shaft
(See Figure 68 Figure 69Figure 70 Figure 71)

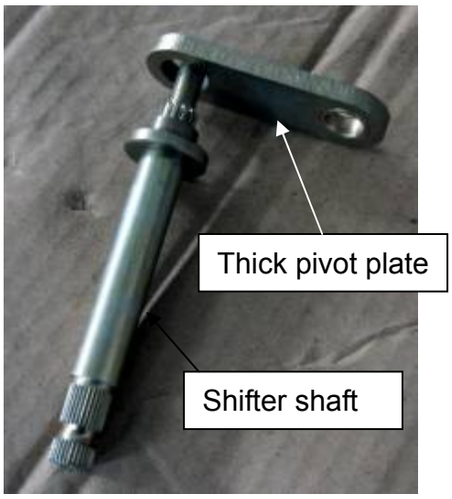

Figure 68

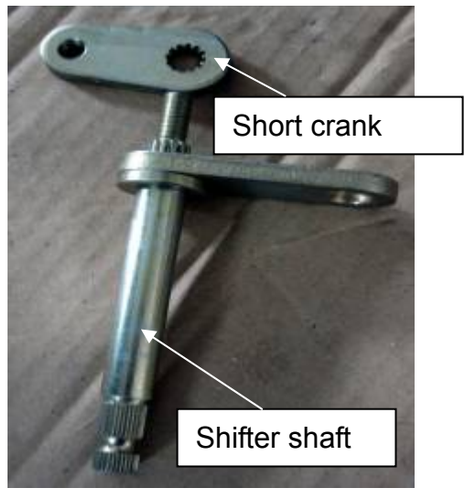

Figure 69

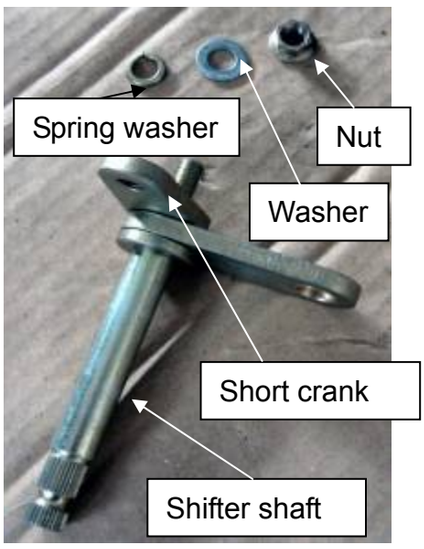

Figure 70

Figure 71

2) Install thin pivot plate and long crank. (see Figure 72
   Figure 73

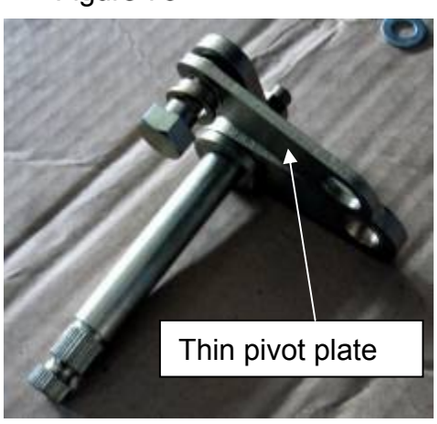

Figure 72

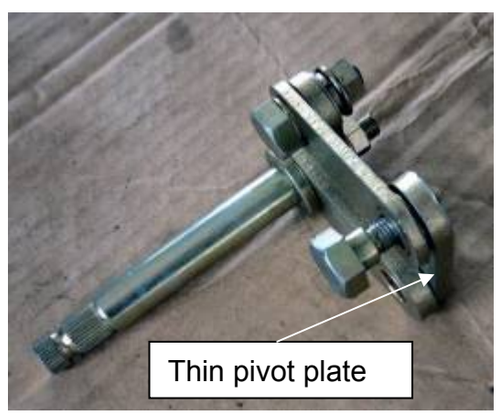

Figure 73

3) Install the shifter shaft ASSY finished above to transmission. (See Figure 74)

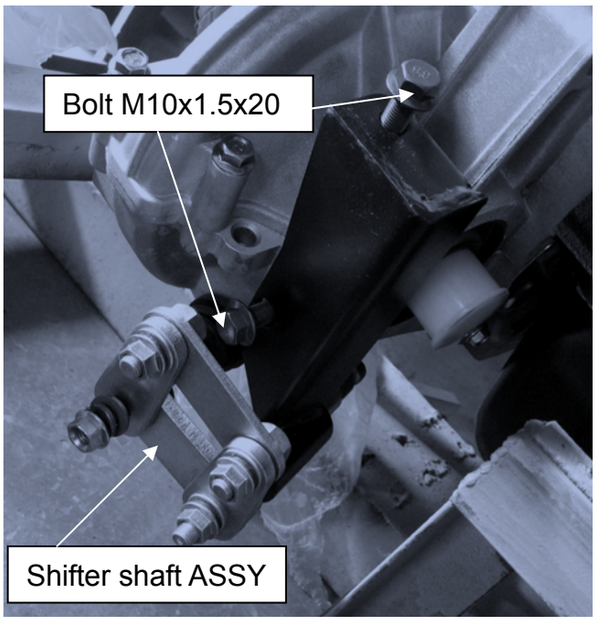

Figure 74

B. Front Wheel Alignment

a) Put the vehicle on level ground.

b) The “toe-in” of the front wheels should be 1.18 inches. To check for alignment, measure distance A and B between the centerline (CL) of the wheels. The proper toe-in dimension A should be 1.18 inches greater than dimension B.

c) To adjust the alignments, loose the lock nuts on both sides of Front Tie Rods. To make Dimension B smaller, turn the rod to the left. Turn the rod to the right to make Dimension B larger. After adjusted to desired length, tighten the lock nut against the rod end. Recheck the dimensions for proper alignment.

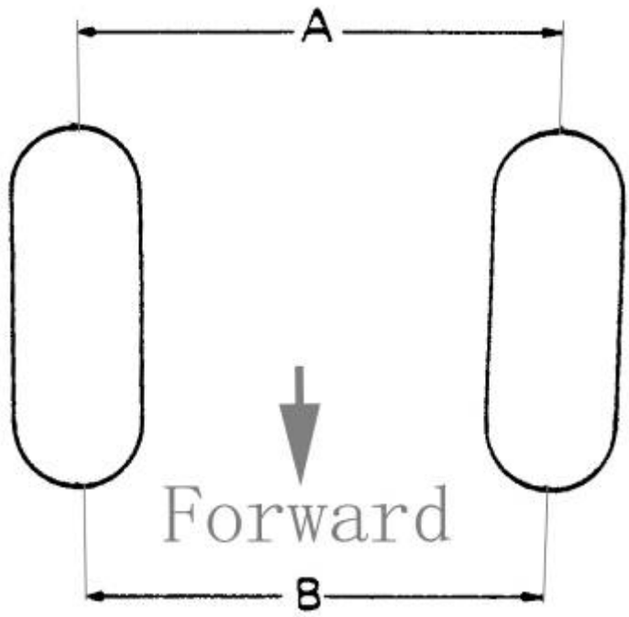

Figure 75

Wiring diagram

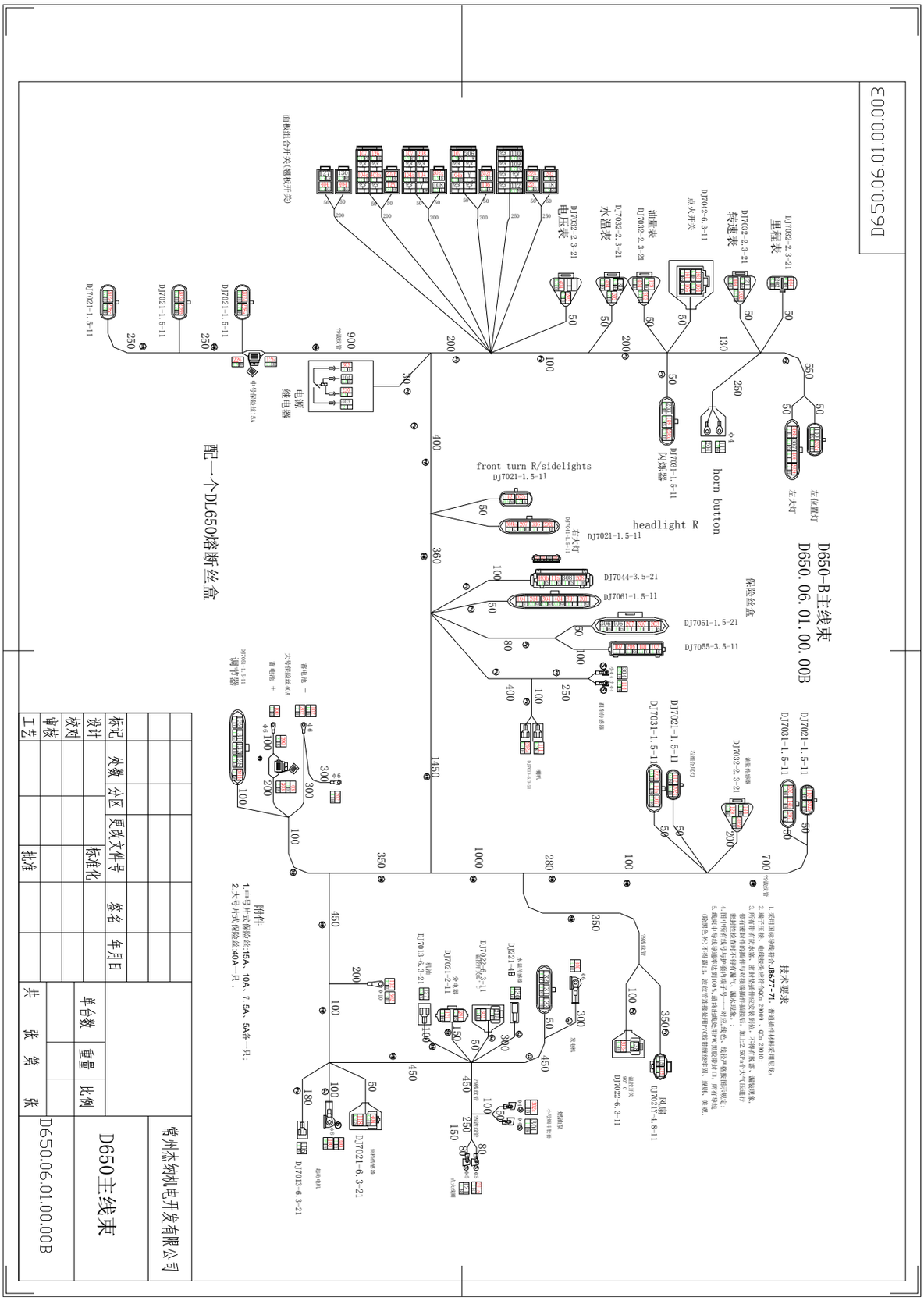

Electrical schematic diagram

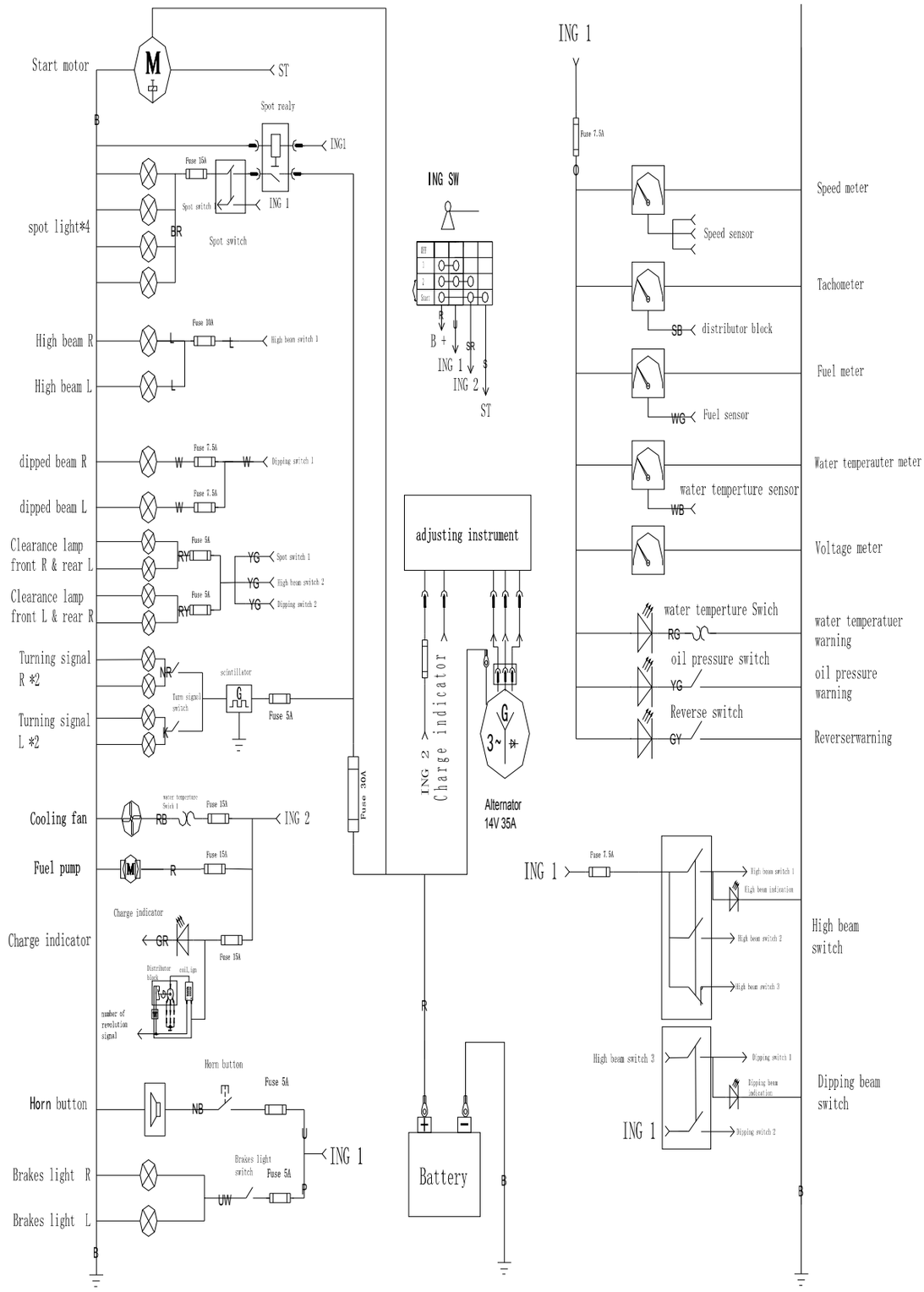

Wire's colour symbol

RS--red/grey B--black R--red U--blue RU--red/blue P--purple S--grey W--white YG--yellow/green L--Cambridge blue N--brown K--pink NB--brown/black NR--brown/red
UW--blue/white RB--red/black GY--green/yellow SB--grey/black BR--black/red Y--yellow WG--white/green GB--green/black WR--white/red BW--black/white

Figure 76

CYLINDER BLOCK PART

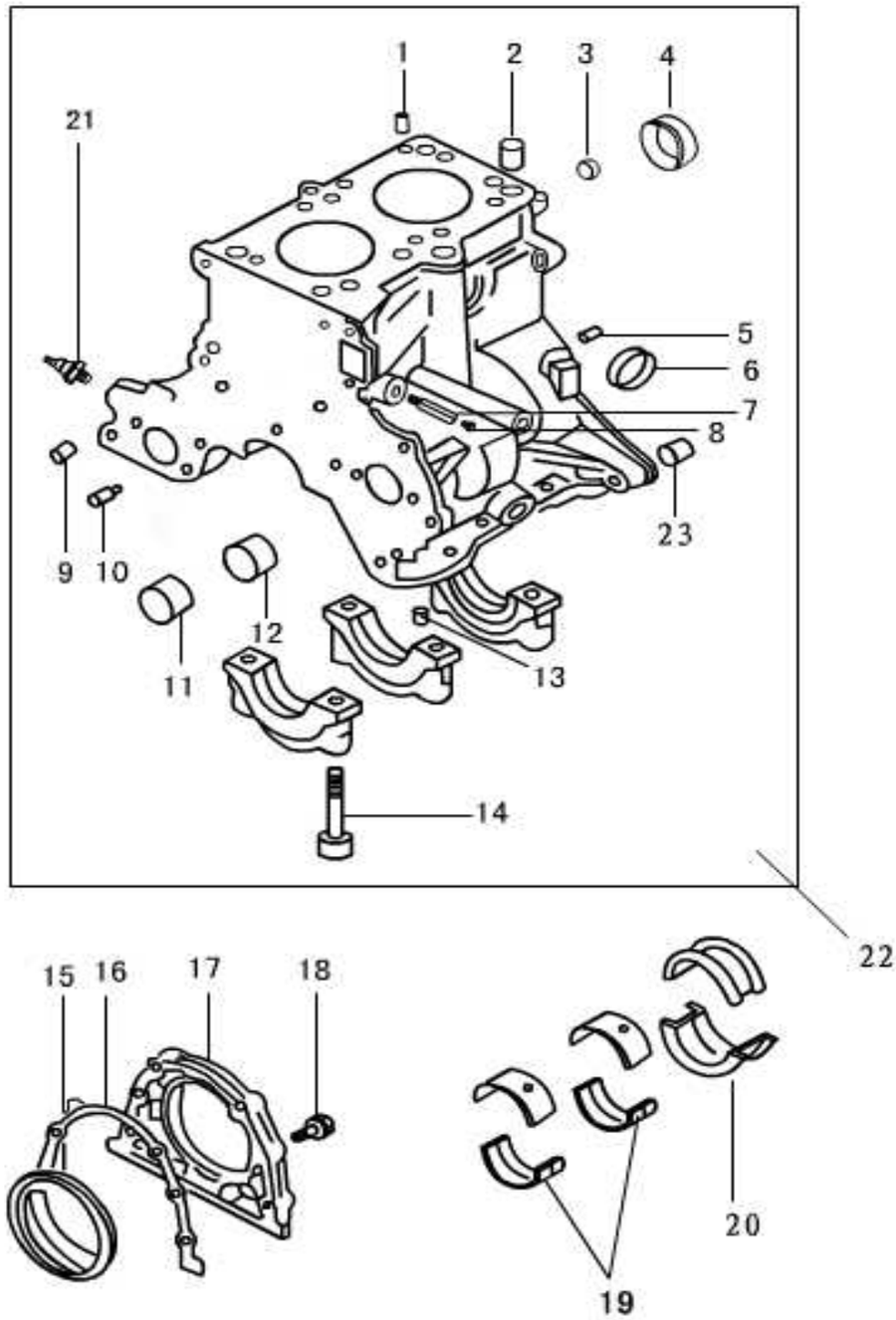

No.	ERP Code	Code name	Description	Q'ty
1	02.DLJ.270Q－02009	270Q－02009	oil feed plug	1
2	02.DLJ.LJ462Q － 1 － 1000028D	LJ462Q － 1 － 1000028D	Cylinder head locating dowel	2
3	02.DLJ.QTB55-φ10.5×7	QTB55-φ10.5×7	Plug φ10.5×7	1
4	02.DLJ.QTB54-φ40	QTB54-φ40	freeze plug φ40	1
5	02.DLJ.119－φ6x18	119－φ6x18	Pinφ6×18	2
6	02.DLJ.QTB542-φ30	QTB542-φ30	freeze plug φ30	3
7	02.DLJ.270Q－02013	270Q－02013	Tie-in pipe of drive valve	1
8	02.DLJ.QTB28-NPT1/4	QTB28-NPT1/4	Hexagon-headed taper bolt NPT1/4	1
9	02.DLJ.QTB42-φ11×12	QTB42-φ11×12	Hollow-swage locating pin φ11×12	2
10	02.DLJ.270Q－02004	270Q－02004	Jetting pipe	1
11	02.DLJ.270Q－02003	270Q－02003	Front bearing of balancing shaft	2
12	02.DLJ.270Q－02011	270Q－02011	Rear bearing of balancing shaft	2
13	02.DLJ.QTB54-8×9	QTB54-8×9	Calathiform plug 8×9	1
14	02.DLJ.270Q－02102	270Q－02102	Main bearing cap bolt	6
15	02.DLJ.QTB53A- FB60×78×7	QTB53A-FB60×78×7	Crankshaft rear oil seal with unidirectional flow around FB60×78×7	1
16	02.DLJ.270Q－02008	270Q－02008	Rear oil seal housing gasket	1
17	02.DLJ.270Q－02007A	270Q－02007A	Rear oil seal housing	1
18	02.DLJ.LJ462Q － 1 － 1000082D	LJ462Q － 1 － 1000082D	Flywheel bolt	4
19	02.DLJ.270Q－04007	270Q－04007	Crankshaft bearing bushing	4
20	02.DLJ.270Q－04008	270Q－04008	Crankshaft thrust bearing bushing	2
21	02.DLJ.270Q－02006C	270Q－02006C	Oil pressure switch	1
22	02.DLJ.276Q－0210D	276Q－0210D	Cylinder block and bearing cap assembly	1
23	02.DLJ.QTB42-φ13×15.5	QTB42-φ13×15.5	Hollow-swage locating pin φ13×15.5	2

SPROCKET COVER AND OIL PAN PART

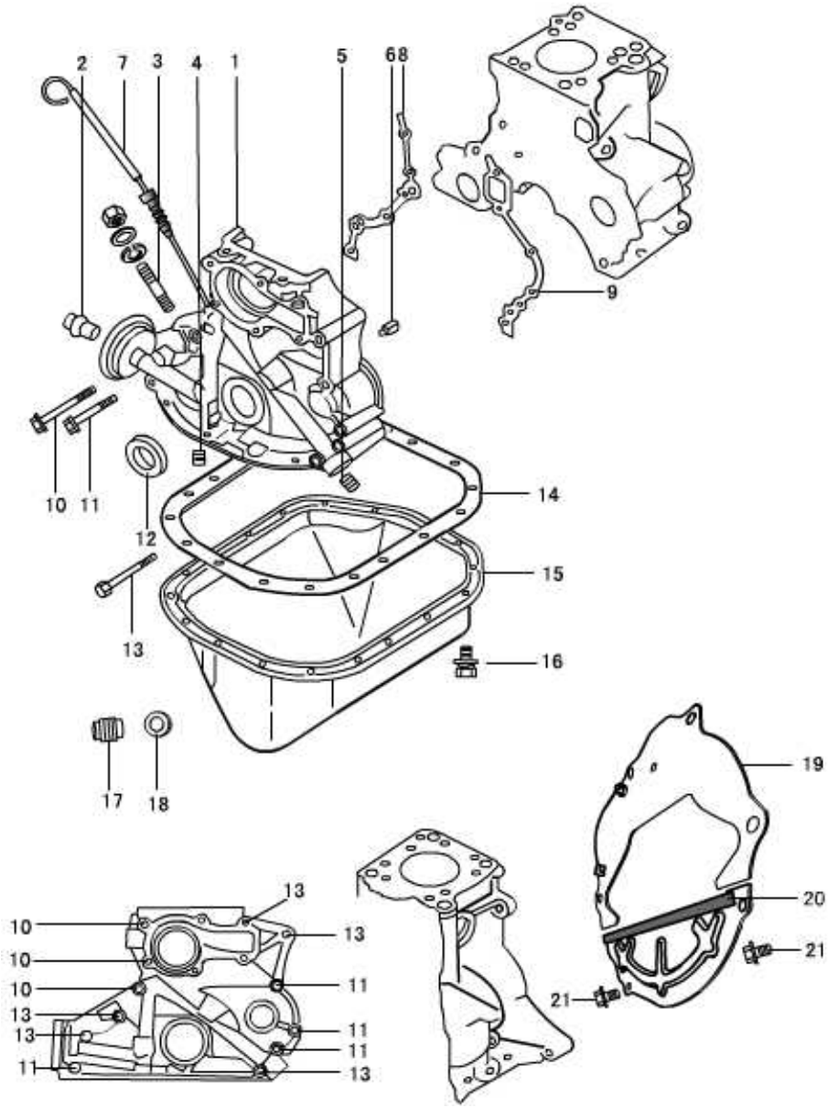

No.	ERP Code	Code name	Description	Q'ty
1	02.DLJ.276Q－02201	276Q－02201	Sprocket cover	1
2	02.DLJ.270Q－02202	270Q－02202	Oil filter threaded sleeve	1
3	02.DLJ.900－M8X22	900－M8X22	Taper bolt AGM8－M8×22－8.8	1
4	02.DLJ.QTB23- NTP1/4	QTB23- NTP1/4	Hexagon-headed taper bolt NTP1/4	1
5	02.DLJ.QTB23- NTP3/8	QTB23- NTP3/8	Hexagon-headed taper bolt NTP3/8	1

No.	ERP Code	Code name	Description	Q'ty
6	02.DLJ.270Q－02004	270Q－02004	Jetting pipe	1
7	02.DLJ.LJ276MT － 2 － 02400	LJ276MT－2－02400	Dipstick	1
8	02.DLJ.-2001	-2001	Left gasket of sprocket cover	1
9	02.DLJ.-2002	-2002	Right gasket of sprocket cover	1
10	02.DLJ.QTB10- M8×88	QTB10- M8×88	Hexagon-headed bolt with edge M8×88	3
11	02.DLJ.QTB10-M8×68	QTB10-M8×68	Hexagon-headed bolt with edge M8×68	4
12	02.DLJ.QTB53A-FB35×50×8	QTB53A- FB35×50×8	Crankshaft front oil seal with unidirectional flow around FB35×50×8	1
13	02.DLJ.QTB10-M8×78	QTB10-M8×78	Hexagon-headed bolt with edge M8×78	3
14	02.DLJ.270－02005A	270－02005A	Oil Pan gasket	1
15	02.DLJ.LJ276MT － 2 － 02300	LJ276MT－2－02300	Oil Pan assembly	1
16	02.DLJ.9074.17-M6X12	9074.17-M6X12	Bolt assembly M6×12	18
17	02.DLJ.QTB24-M14×1.5	QTB24-M14×1.5	Drain Plug M14×1.5	1
18	02.DLJ.270Q－02303B	270Q－02303B	Drain Plug gasket	1
19	02.DLJ.276MT－2－02500	276MT－2－02500	backing plate	1
20	02.DLJ.LY－1701220－01	LY－1701220－01	Tird and forth gear assy	1
21	02.DLJ.QTB10-M6×10	QTB10-M6×10	Hexagon-headed bolt with edge M6×10	2

CYLINDER HEAD PART

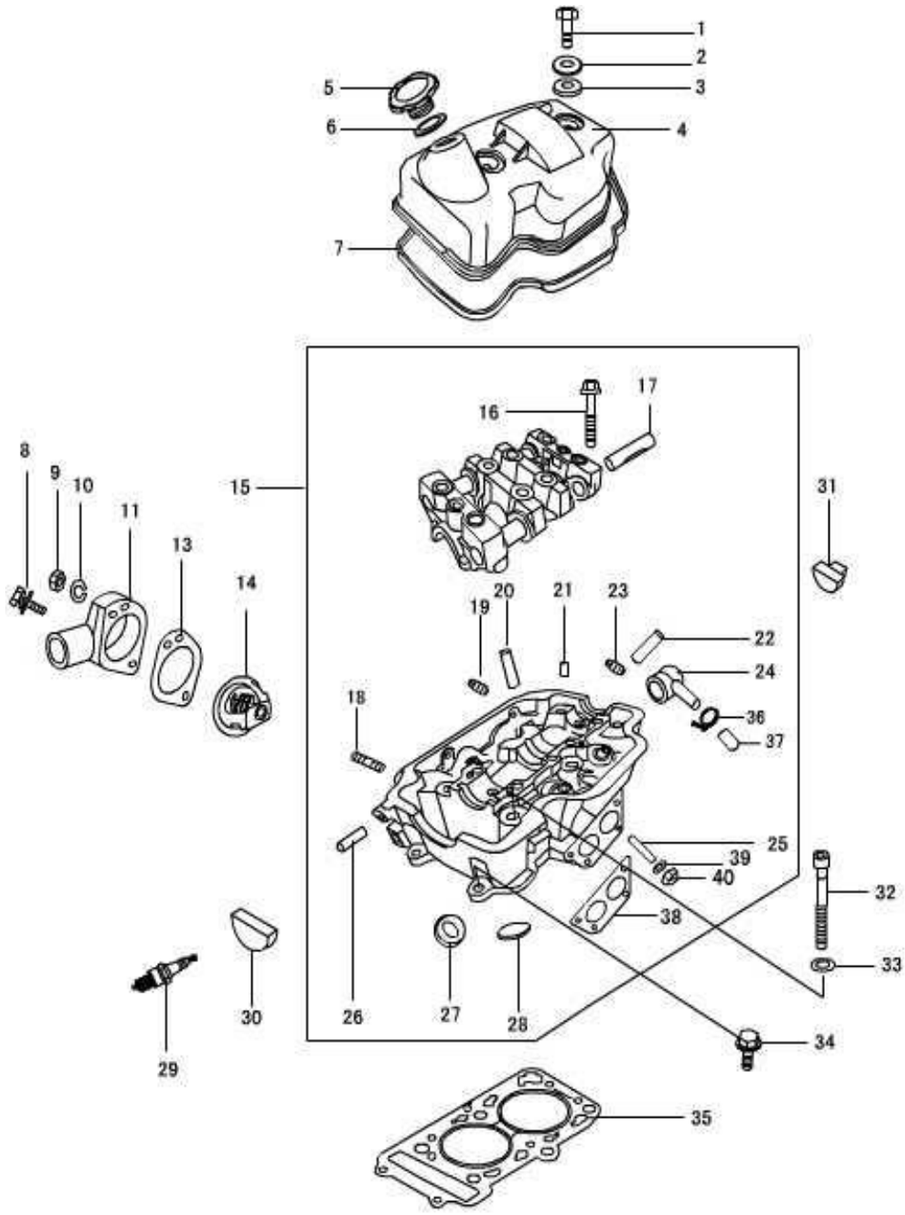

No.	ERP Code	Code name	Description	Q'ty
1	02.DLJ.5782－M8X40	5782－M8X40	Bolt M8×40	2
2	02.DLJ.270Q－01009	270Q－01009	washer of cylinder head cover bolt	2
3	02.DLJ.270Q－01011	270Q－01011	Rubber pad of cylinder head cover bolt	2
4	02.DLJ.276Q－01300	276Q－01300	Cylinder head cover assembly	1
5	02.DLJ.270Q－01400B	270Q－01400B	Filler cap assembly	1

6	02.DLJ.270Q－01403	270Q－01403	Filler cap ruuber washer	1
7	02.DLJ.270Q－01012B	270Q－01012B	Seal ring of cylinder head cover	1
8	02.DLJ.9074.17－M8X30	9074.17－M8X30	Unit bolt M8×30	1
9	02.DLJ.QTB15-M8	QTB15-M8	Nut M8－8	5
10	02.DLJ.93－φ8	93－φ8	Spring washer φ8	5
11	02.DLJ.270Q－01017	270Q－01017	Thermostat housing	1
13	02.DLJ.270Q－01016	270Q－01016	Thermostat gasket	1
14	02.DLJ.270Q－01015	270Q－01015	Thermostat	1
15	02.DLJ.270Q－01100	270Q－01100	Cylinder head and camshaft bearing part	
16	02.DLJ.270Q－01109	270Q－01109	Camshaft bearing bushing cap bolt	8
17	02.DLJ.270Q－01007	270Q－01007	Valve rocker arm shaft	4
18	02.DLJ.898－M8X25	898－M8X25	Stud AGM8×25－8.8	4
19	02.DLJ.899－M8X28	899－M8X28	Stud AGM8×28－8.8	1
20	02.DLJ.270Q－01104	270Q－01104	Inlet valve guide	2
21	02.DLJ.QTB40-φ 6×14	QTB40-φ 6×14	Locating pin φ 6×14	6
22	02.DLJ.270Q－01105	270Q－01105	Exhaust valve guide	2
23	02.DLJ.899－B	899－B	bolt	1
24	02.DLJ.270Q－01023A	270Q－01023A	Hexagon -headed taper plug	1
25	02.DLJ.898－M8X20	898－M8X20	Stud AGM8-M8×20－8.8	4
26	02.DLJ.270Q－01018	270Q－01018	Minor water pipe	1
27	02.DLJ.270Q－01102	270Q－01102	Intake valve seat	2
28	02.DLJ.270Q－01103B	270Q－01103B	Exhaust valve seat	2
29	02.DLJ.270Q－01019B	270Q－01019B	Water Temperature sender unit	1
30	02.DLJ.270Q－01013	270Q－01013	Front Semi-Circle Oil Seal	1
31	02.DLJ.270Q－01014	270Q－01014	Rear Semi-Circle Oil Seal	1
32	02.DLJ.270Q－01022	270Q－01022	Cylinder head bolt	6
33	02.DLJ.GTB30-φ21×φ11×3	GTB30-φ21×φ11×3	head bolt washer φ21×φ11×3	6
34	02.DLJ.9074.17－M8X28	9074.17－M8X28	Bolt assembly M8×28	2
35	02.DLJ.276Q－01021	276Q－01021	Cylinder head gasket	1
36	02.DLJ.270Q－01025	270Q－01025	Rubber blanking plug	1
37	02.DLJ.ZB/TT32005.1－88	ZB/TT32005.1－88	hose clamp	1
38	02.DLJ.270Q－01024	270Q－01024	Exhaust pipe gasket	1
39	02.DLJ.93－W8	93－W8	Washer8	4
40	02.DLJ.QTB15-M8	QTB15-M8	Nut M8－8	4

PISTON ， CONNETING ROD AND CRANKSHAFT PART

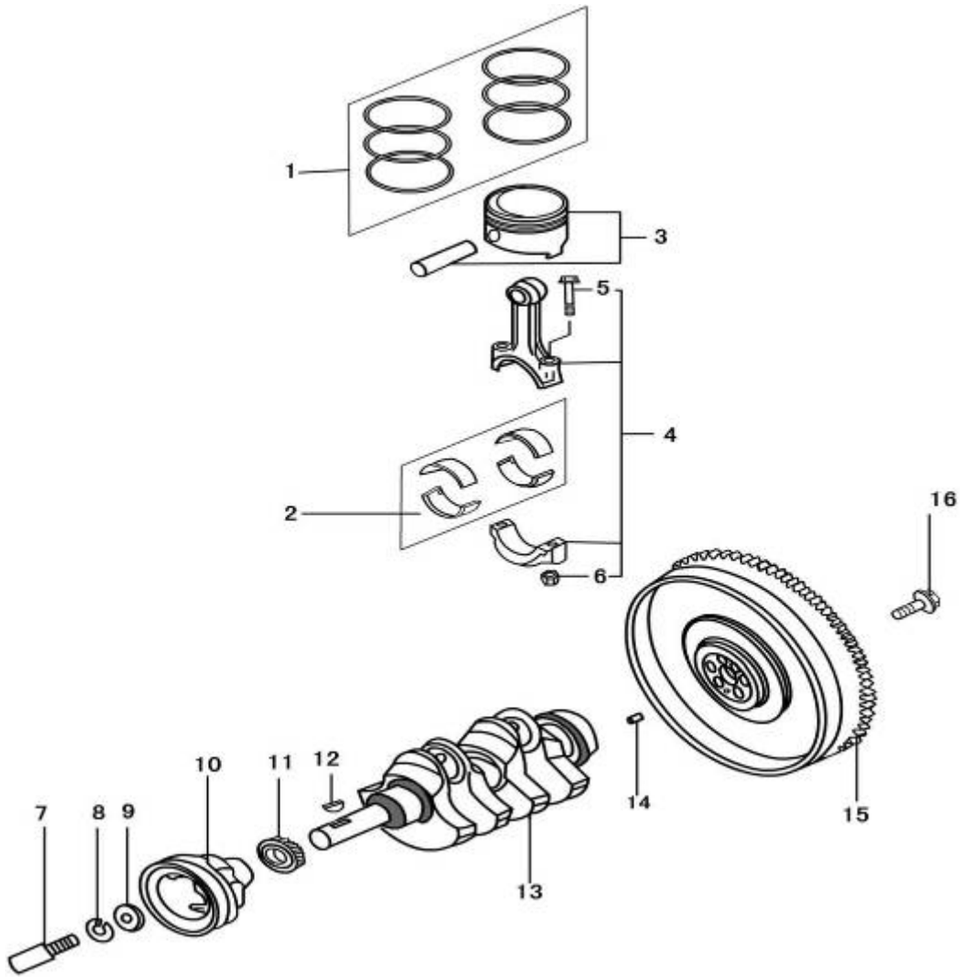

No.	ERP Code	Code name	Description	Q'ty
1	02.DLJ.276Q－03002	276Q－03002	Piston ring (1)	2
	02.DLJ.276Q－03003	276Q－03003	Piston ring (2)	2
	02.DLJ.276Q－03200	276Q－03200	Piston ring (3)	2
2	02.DLJ.270Q－03006	270Q－03006	Connecting rod bearing	4
3	02.DLJ.276Q－03001	276Q－03001	Piston	2
	02.DLJ.276Q－03004B	276Q－03004B	Piston Pin	2
4	02.DLJ.270Q－03100	270Q－03100	Connecting rod assembly(1)	2
			Connecting rod assembly(2)	2
5	02.DLJ.270Q－03103	270Q－03103	Connecting rod bolt	4
6	02.DLJ.270Q－03104	270Q－03104	Connecting rod nut	4
7	02.DLJ.270Q－04001	270Q－04001	front pulley bolt	1
8	02.DLJ.859－SW12	859－SW12	Spring washer 12	1

9	02.DLJ.270Q－04002	270Q－04002	Washer	1
10	02.DLJ.270Q－04003	270Q－04003	Crankshaft belt pulley	1
11	02.DLJ.270Q－04004A	270Q－04004A	Driven bevel gear	1
12	02.DLJ.QTB44-4X19	QTB44-4X19	Woodruff key4×19	2
13	02.DLJ.276Q－04006B	276Q－04006B	Crankshaft	1
14	02.DLJ.LJ462Q1－1000135D	LJ462Q1－1000135D	Locating pin of fly wheel	1
15	02.DLJ.LJ368－1005011	LJ368－1005011	Ring gear assembly of fly wheel	1
16	02.DLJ.LJ462Q－1－1005014D	LJ462Q－1－1005014D	flywheel bolt	6

BALANCING SHAFT PART

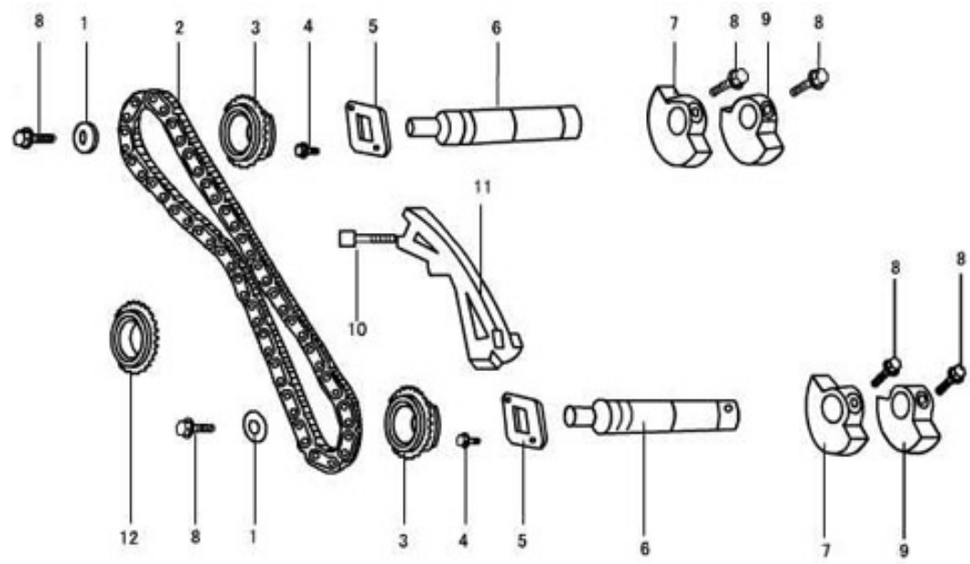

No.	ERP Code	Code name	Description	Q'ty
1	02.DLJ.QTB30-φ24×φ8.5×3	QTB30-φ24×φ8.5×3	Thick washer φ24×φ8.5×3	2
	02.DLJ.270Q－04400	270Q－04400	Balancing chain assembly	1
3	02.DLJ.270Q－04310A	270Q－04310A	Balancing shaft sprocket assembly	2
4	02.DLJ.QTB10-M6×10	QTB10-M6×10	Hexagon-headed bolt with edge M6×10	4
5	02.DLJ.270Q－04301	270Q－04301	Baffle plate of Balancing shaft	2
6	02.DLJ.270Q－04302A	270Q－04302A	Balancing shaft	2
7	02.DLJ.270Q－04303	270Q－04303	Front balancing weight	2
8	02.DLJ.270Q－04305	270Q－04305	Balancing weight bolt	6
9	02.DLJ.270Q－04304	270Q－04304	Rear balancing weight	2
10	02.DLJ.QTB10-M6×45	QTB10-M6×45	Hexagon-headed bolt with edge M6×45	2
11	02.DLJ.270Q－04200B	270Q－04200B	Guide pad assembly of balancing chain	1
12	02.DLJ.270Q－04012A	270Q－04012A	Cam chain drive sprocket	1

CAMSHAFT AND CHAIN TRAIN PART

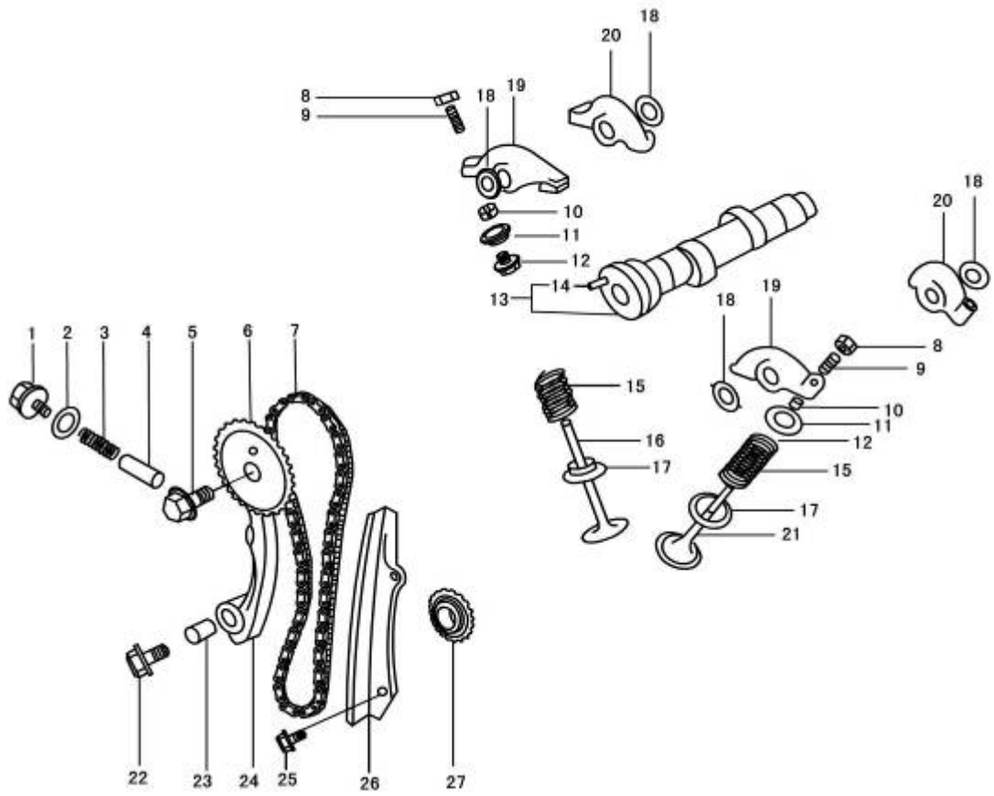

No.	ERP Code	Code name	Description	Q'ty
1	02.DLJ.270Q－05400	270Q－05400	Bolt assembly	1
2	02.DLJ 270Q－05007	270Q－05007	Washer	1
3	02.DLJ 270Q－05005A	270Q－05005A	Tensioning spring	1
4	02.DLJ 270Q－05004	270Q－05004	Tensioning spring plate	1
5	02.DLJ QTB13-M12×1.25×30	QTB13-M12×1.25×30	Small hexagon-headed bolt with edge M12×1.25×30	1
6	02.DLJ 270Q－05002A	270Q－05002A	Camshaft timing sprocket wheel	1
7	02.DLJ 270Q－05100	270Q－05100	Timing chain assembly	1
8	02.DLJ 270Q－01502	270Q－01502	Valve clearance adjusting nut	4
9	02.DLJ 270Q－01501	270Q－01501	Valve clearance adjusting bolt	4
10	02.DLJ 270Q－01004	270Q－01004	Valve locker	8
11	02.DLJ 270Q－01003	270Q－01003	Retainer	4
12	02.DLJ 270Q－01200	270Q－01200	Stem seal	4
13	02.DLJ 276Q－05001	276Q－05001	Camshaft	1
14	02.DLJ QTB40- φ6×14	QTB40- φ6×14	Dowel pin φ6×14	1
15	02.DLJ 276Q－01002A	276Q－01002A	Valve spring	4

16	02.DLJ.270Q－01005A	270Q－01005A	Intake Valve	2
17	02.DLJ.270Q－01001	270Q－01001	Lower seat of valve spring	4
18	02.DLJ.270Q－01008	270Q－01008	Wave form washer	4
19	02.DLJ.270Q－01510	270Q－01510	Valve rocker arm of first cylinder	2
20	02.DLJ.270Q－01610	270Q－01610	Valve rocker arm of second cylinder	2
21	02.DLJ.270Q－01006	270Q－01006	Exhaust Valve	2
22	02.DLJ.QTB13- M8×32	QTB13- M8×32	Small hexagon-headed bolt with edge M8×32	1
23	02.DLJ.270Q－05003	270Q－05003	Dowel	1
24	02.DLJ.270Q－05300	270Q－05300	Chain tightner	1
25	02.DLJ.QTB10-M6×10	QTB10-M6×10	Hexagon-headed bolt with edge M6×10	2
26	02.DLJ.270Q－05200	270Q－05200	Chain guide plate	1
27	02.DLJ.270Q－04005A	270Q－04005A	Crankshaft timing chain sprocket	1

INTAKE MANIFOLD PART

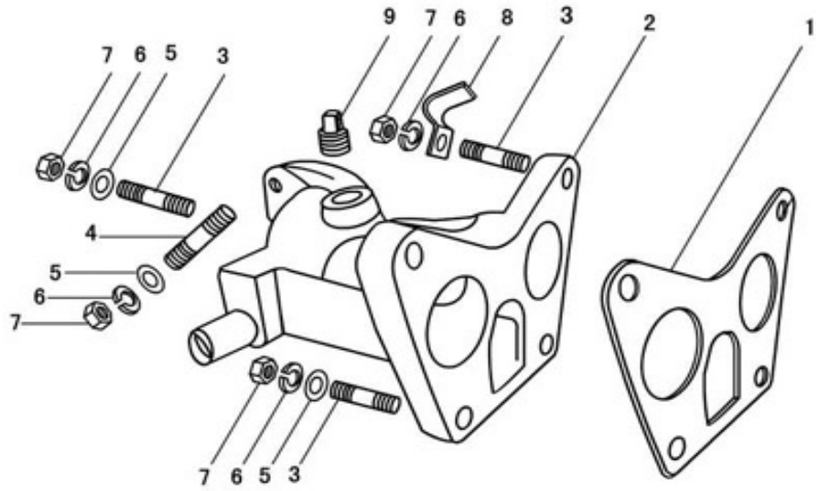

No.	ERP Code	Code name	Description	Q'ty
1	02.DLJ.270Q－06006	270Q－06006	Intake manifold paper gasket	1
2	02.DLJ.LJ276MT－2－06000	LJ276MT － 2 － 06000	Intake mainfold	1
3	02.DLJ.898－M8X25	898－M8X25	Stud AC－M8×25－8.8	4
4	02.DLJ.848－M8X28	848－M8X28	Stud AC－M8×28－8.8	1
5	02.DLJ.QTB77	QTB77	Flat washer	6
6	02.DLJ.93－SWφ8	93－SWφ8	Spring washer φ8	6
7	02.DLJ.QTB15-M8	QTB15-M8	Nut M8－8	2
8	02.DLJ.QTB26	QTB26	Clip	3
9	02.DLJ.899－Z 3/8	899－Z 3/8	Square head taper plug Z 3/8″	1

OIL FILTER AND OIL PUMP PART

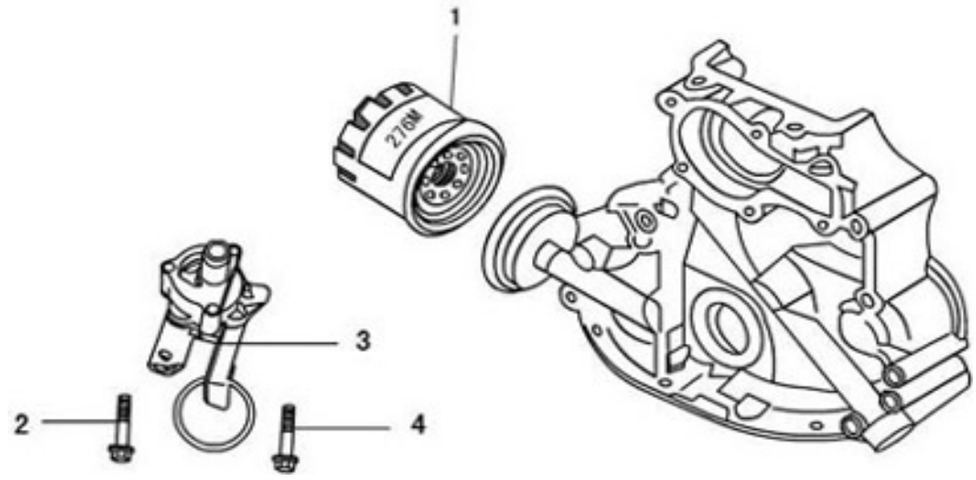

No.	ERP Code	Code name	Description	Q'ty
1	02.DLJ.270Q－17000	270Q－17000	Oil Filter	1
2	02.DLJ.9074.17－M6X48	9074.17－M6X48	Bolt assembly M6×48	2
3	02.DLJ.LJ276MT－2－16000	LJ276MT－2－16000	Oil pump	1
4	02.DLJ.9074.17－M6X53	9074.17－M6X53	Bolt assembly M6×53	1

WATER PUMP AND FAN PART

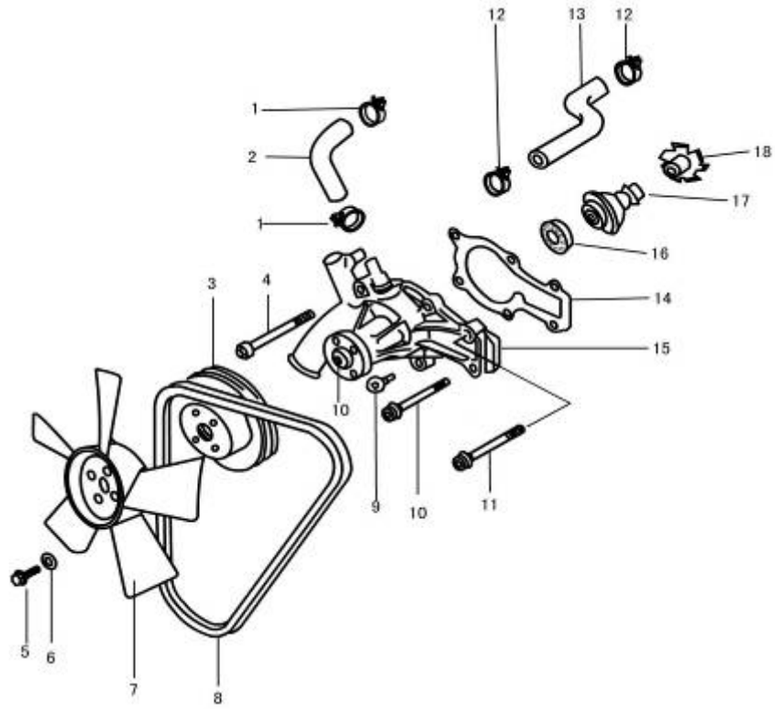

No.	ERP Code	Code name	Description	Q'ty
1	02.DLJ.ZB/TT32005.1－88	ZB/TT32005.1－88	Hose clamp	2
2	02.DLJ.270Q－19011	270Q－19011	Rubber pipe (2)	1
3	02.DLJ.270Q－19013	270Q－19013	water pump pulley	1
4	02.DLJ.QTB10-M8×88	QTB10-M8×88	Hexagon-headed bolt with edge M8×88	2
5	02.DLJ.9074.15－M6X20	9074.15－M6X20	Hexagon head bolt M6×20	4
6	02.DLJ.QTB32-7.5	QTB32-7.5	Washer 7.5	4
7	02.DLJ.276Q－19200	276Q－19200	Fan assembly	1
8	02.DLJ.QTB93A-AV10X845	QTB93A-AV10X845	Fan belt AV10×845	1
9	02.DLJ.QTB10-M8×23	QTB10-M8×23	Hexagon-headed bolt with edge M8×23	2
10	02.DLJ.270Q－19002B	270Q－19002B	bolt	1
11	02.DLJ.QTB10-M8×78	QTB10-M8×78	Hexagon-headed bolt with edge M8×78	2
12	02.DLJ.ZB/TT32005.1－88	ZB/TT32005.1－88	Hose clamp	2
13	02.DLJ.LJ276MT－2－19009	LJ276MT－2－19009	Rubber pipe (1)	1
14	02.DLJ.276Q－19001	276Q－19001	Water pump gasket	1
15	02.DLJ.276Q－19100	276Q－19100	Water pump	1
16	02.DLJ.276－E60101	276－E60101	Roller bearing E60101	2
17	02.DLJ.270Q－F12－00	270Q－F12－00	Water seal	1
18	02.DLJ.276Q－19003	276Q－19003	Impeller	1

DISTRIBUTOR AND ITS LINE UNIT

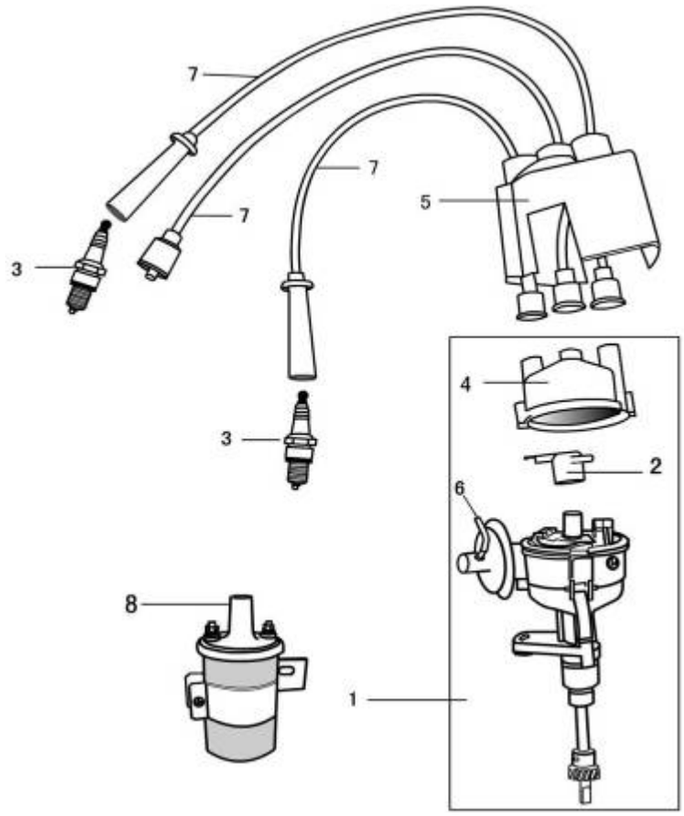

No.	ERP Code	Code name	Description	Q'ty
1	02.DLJ.270Q－23510W	270Q－23510W	Distributor assembly（non contact）	1
2	02.DLJ.FDQ－60000	FDQ－60000	Rotor	1
3	02.DLJ.7825－SP	7825－SP	Spark plug	2
4	02.DLJ.FDQ－1－50000	FDQ－1－50000	Distributor cap assembly	1
5	02.DLJ.270Q－23901	270Q－23901	Distributor protective cover	1
6	02.DLJ.LJ276MT － 2 － 23501	LJ276MT－2－23501	Vacuum rubber tube	1
7	02.DLJ.LJ276M－23910F	LJ276M－23910F	High – tension leads	1
8	02.DLJ.LJ462Q － 1 － 3705010DW	LJ462Q－1－3705010DW	Ignition coil	1

CARBURETOR PART

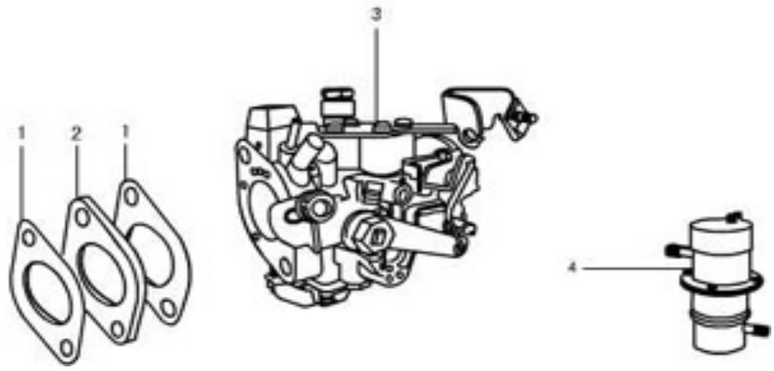

No.	ERP Code	Code name	Description	Q'ty
1	02.DLJ.270Q－06004	270Q－06004	Carburetor gasket	2
2	02.DLJ.270Q－06003	270Q－06003	Carburetor insulator	1
3	02.DLJ.276Q－13000	276Q－13000	Carburetor	1
4	02.DLJ.JB12D－H	JB12D－H	Electric petrol pump	1

AIR FILTER AND PIPE LINE PART

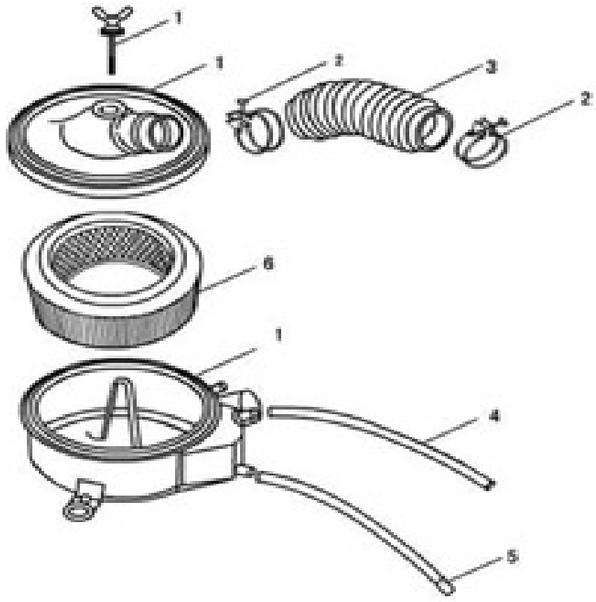

No.	ERP Code	Code name	Description	Q'ty
1	02.DLJ.LJ276MT－2－07100F	LJ276MT－2－07100F	Air filter housing	1
2	02.DLJ.QK1706－03	QK1706－03	Flexible hose clamp	2
3	02.DLJ.LJ276MT－2－07001F	LJ276MT－2－07001F	Flexible intake hose	1
4	02.DLJ.LJ276MT－2－07002F	LJ276MT－2－07002F	Rubber breathing pipe	1
5	02.DLJ.270Q－07003	270Q－07003	Storing dust pipes	1
6	02.DLJ.QK1706－05	QK1706－05	air filter	1

STARTER ， ALTERNATOR AND THEIR FASTENING PIECE

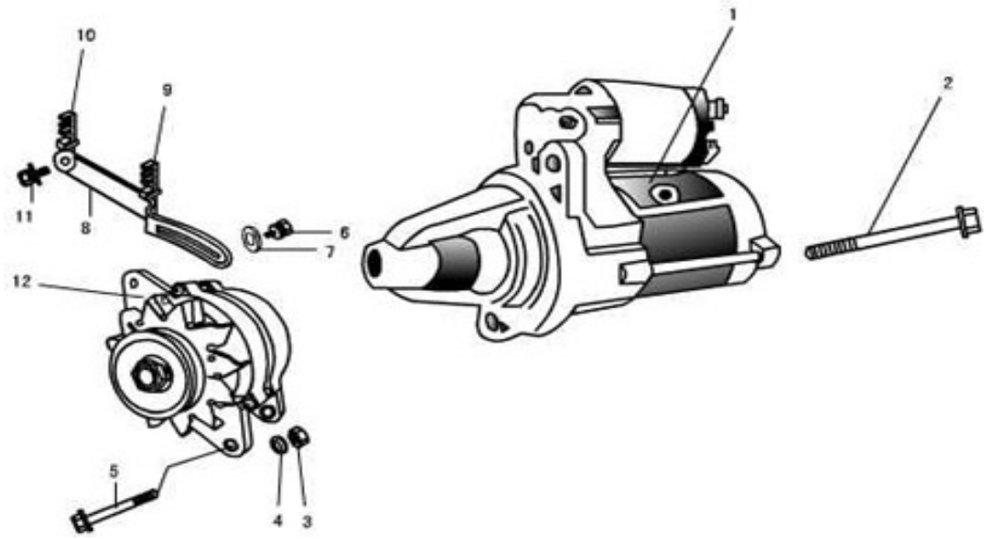

No.	ERP Code	Code name	Description	Q'ty
1	02.DLJ.LJ368Q－3708010	LJ368Q－3708010	Starter	1
2	02.DLJ.LJ368Q－1000068	LJ368Q－1000068	Starter clamp bolt	2
3	02.DLJ.QTB15-M8	QTB15-M8	Hexagon nut M8－8	1
4	02.DLJ.93－SW8	93－SW8	Spring washer 8	1
5	02.DLJ.270Q－02203A	270Q－02203A	Adjusting bolt	1
6	02.DLJ.9074.15－M8X25	9074.15－M8X25	Bolt M8×25	1
7	02.DLJ.QTB30-φ24×φ8.5×3	QTB30-φ24×φ8.5×3	Thick washerφ24×φ8.5×3	1
8	02.DLJ.270Q－25010A	270Q－25010A	Alternator bracket	1
9	02.DLJ.270Q－25001	270Q－25001	Second fixed swift	1
10	02.DLJ.270Q－25020	270Q－25020	First fixed swift (insert)	1
11	02.DLJ.9074.15－M8X20	9074.15－M8X20	Bolt M8×20	1
12	02.DLJ.LJ462Q－1－3701010D	LJ462Q－1－3701010D	Alternator	1

TRANSMISSION TANK

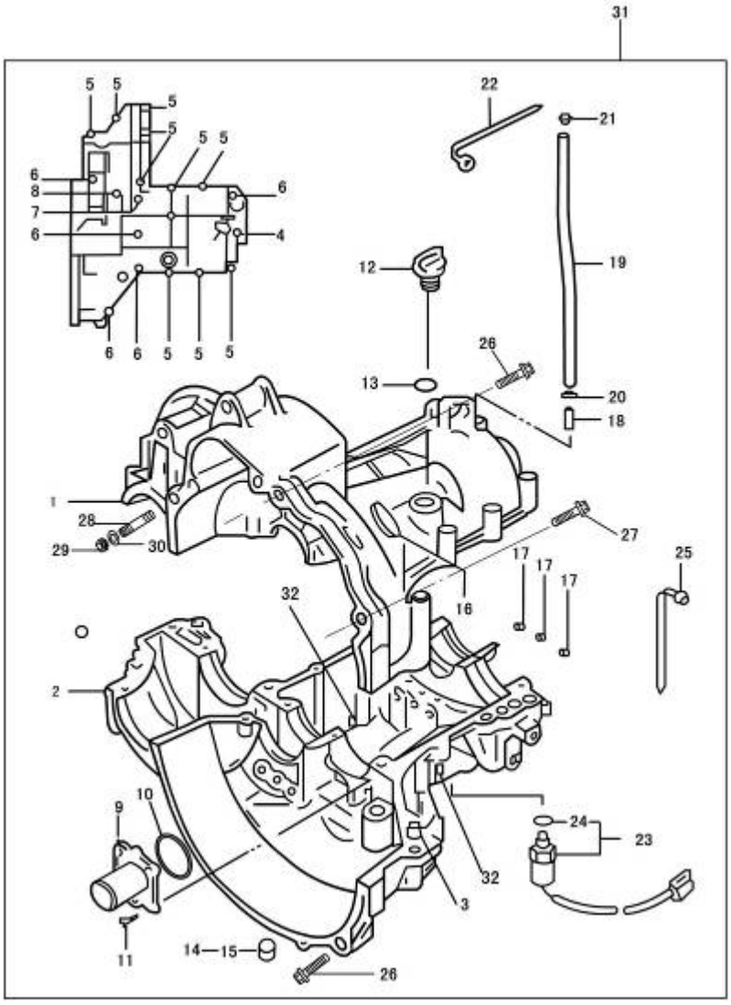

No.	ERP Code	Code name	Description	Q't y
1	02.DLJ.4T06C-1701112	4T06C-1701111	Upper housing of transmission	1
2	02.DLJ.4T06C-1701112	4T06C-1701112	Lower housing of transmission	1
3	02.DLJ.MQC4-1701113	MQC4-1701113	Locating pin	2
4	02.DLJ.GB5789-86 AM6X40	GB5789-86 AM6X40	Bolt AM6×40	1
5	02.DLJ.GB5790-86 AM8X50	GB5790-86 AM8X50	Bolt AM8×50	10
6	02.DLJ.GB5790-86 AM8X70	GB5790-86 AM8X7	Bolt AM8×70	5
7	02.DLJ.GB5790-86 AM8X90	GB5790-86 AM8X90	Bolt AM8×90	1
8	02.DLJ.GB5790-86 AM8X135	GB5790-86 AM8X135	Bolt AM8×135	1
9	02.DLJ.MQC4-1701301	MQC4-1701301	Baffle plate of seal ring of the first shaft	1
10	02.DLJ.GB3452,1-82 40X2,65	GB3452.1-2005 40×2.65	“O” type seal ring 40×2.65	1
11	02.DLJ.GB819-85 M6×16-6.8	GB819-85 M6X16-6.8	Bolt M6×16-6.8	4

12	02.DLJ.MQC4-1701140	MQC4-1701140	Dip stick	1
13	02.DLJ.GB3452,1-82 15X2,65	GB3452.1-2005 15×2.65	“O” type seal ring15×2.65	1
14	02.DLJ.ZBT32001,3-87	ZBT32001,3-87	Bolt Z 1／2″—14	1
15	02.DLJ.ZBT32001,9-87	ZBT32001,9-87	Bolt Z 1／2″—14(magnetism)	1
16	02.DLJ.MQC4-1701017	MQC4-1701017	Sight hole cover	1
17	02.DLJ.MQC4-1702050	MQC4-1702050	Sealing cover assembly of shift lever	3
18	02.DLJ.MQC4-1701025	MQC4-1701025	Breathing pipe tie-in	1
19	02.DLJ.MQC4-1701026	MQC4-1701026	Breathing pipe	1
20	02.DLJ.MQC4-1701023	MQC4-1701023	Perkins joint	1
21	02.DLJ.MQC4-1701027	MQC4-1701027	Breathing pipe plug	1
22	02.DLJ.MQC4-1701024	MQC4-1701024	Line fastener	1
23	02.DLJ.4T06-3729010	4T06-3729010	Reverse switch	1
24	02.DLJ.GB3452,1-82 11.8×1.8	GB3452.1-2005 11.8 ×1.8	“O” type seal ring 11.8×1.8	1
25	02.DLJ.1000013	1000013	Supporting piece	1
26	02.DLJ.MQC4-1701024	MQC4-1701024	Line fastener	1
27	02.DLJ.LJ368Q—1000163	LJ368Q—1000163	Shouldered tap bolt	2
28	02.DLJ.LJ368Q—1000169	LJ368Q—1000169	Shouldered tap bolt	1
29	02.DLJ.LJ368Q—1000167	LJ368Q—1000167	Stud	1
30	02.DLJ.6171—M10X1.25	6171—M10X1.25	Nut M10×1.25	1
31	02.DLJ.4T06CA4-1700000	4T06CA4-1700000	4T06CA4Transmission assembly	1
32	02.DLJ.848—W10	848—W10	Washer10	1

CLUTCH, SHIFTER SHAFT AND ROCKER ARM

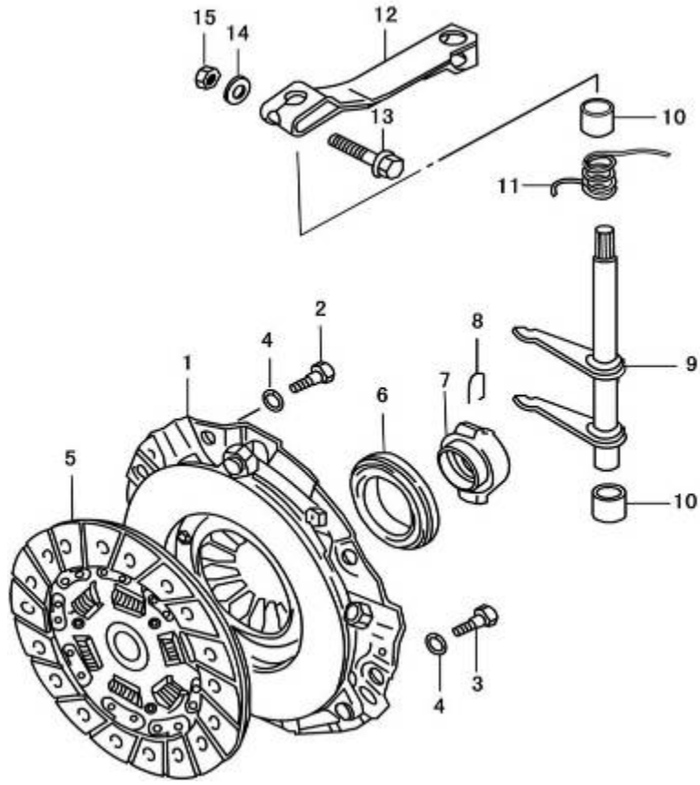

No.	ERP Code	Code name	Description	Q'ty
1	02.DLJ.QST160HH14	QST160HH14	Clutch pressure plate	1
2	02.DLJ.LJ462Q—1—1005024D	LJ462Q—1—1005024D	Clutch cover bolt	2
3	02.DLJ.9074.15—M8X16	9074.15—M8X16	Bolt tab M8×16	4
4	02.DLJ.859—W8	859—W8	Light gage spring washer8	6
5	02.DLJ.DST160A71	DST160A71	Clutch plate	1
6	02.DLJ.MQC4-1701510	MQC4-1701510	Clutch release bearing	1
7	02.DLJ.MQC4-1701501	MQC4-1701501	Release bearing carrier	1
8	02.DLJ.MQC4-1701022	MQC4-1701022	Circlip	2
9	02.DLJ.MQC4-1701040	MQC4-1701040	Clutch fork	1
10	02.DLJ.MQC4-1701019	MQC4-1701019	Bushing ring	2
11	02.DLJ.MQC4-1701018	MQC4-1701018	Tension spring	1
12	02.DLJ.4T06C-1701016	4T06C-1701016	Clutch action arm	1
13	02.DLJ.GB5789-86 AM8X35	GB5789-86 AM8X35	Bolt AM8×35	1
14	02.DLJ.GB97.1-85 8-200HV	GB97.1-85 8-200HV	Washer8-200HV	1
15	02.DLJ.GB6170-86 M8	GB6170-86 M8	Nut M8	1

DIFFERENTIAL

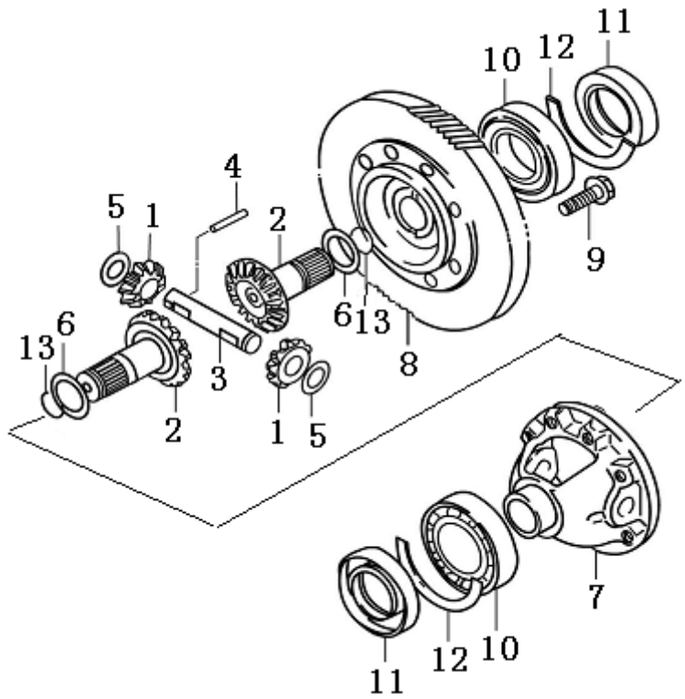

No.	ERP Code	Code name	Description	Q'ty
1	02.DLJ.MQC4-2303017	MQC4-2303017	Differential Planet gear	2
2	02.DLJ.MQC4-2303015	MQC4-2303015	Half axle of Differential	2
3	02.DLJ.MQC4-2303019	MQC4-2303019	Planet gear shaft	1
4	02.DLJ.GB309-84 P5x5.8	GB/T309-1984	Needle bearing P5×25.8	1
5	02.DLJ.MQC4-2303018	MQC4-2303018	Planet gear washer	2
6-1	02.DLJ.MQC4-2303012	MQC4-2303012	Half axle adjusting washer	0～2
6-2	02.DLJ.MQC4-2303013	MQC4-2303013	Half axle adjusting washer	0～2
6-3	02.DLJ.MQC4-2303014	MQC4-2303014	Half axle adjusting washer	0～2
7	02.DLJ.MQC4-2303011	MQC4-2303011	Differential case	1
8	02.DLJ.4T06-2303021	4T06-2303021	Main reduction gear	1
9	02.DLJ.GB5789-86 M10x.25x0-10.9	GB/T5789-1986	Bolt M10×1.25×20-10.9	8
10	02.DLJ.GB/T276-94 6207-Z/P63	GB/T276-1994	Endocentric ball bearing 6207Z/P63	2
11	02.DLJ.MQC4-1701090	MQC4-1701090	Differential seal ring assembly	2
12	02.DLJ.MQC4-1701014	MQC4-1701014	Thrust ring of Differential	2
13	02.DLJ.MQC4-2303016	MQC4-2303016	Steel cable baffle ring	2

ONE SHAFT OUTPUT (option)

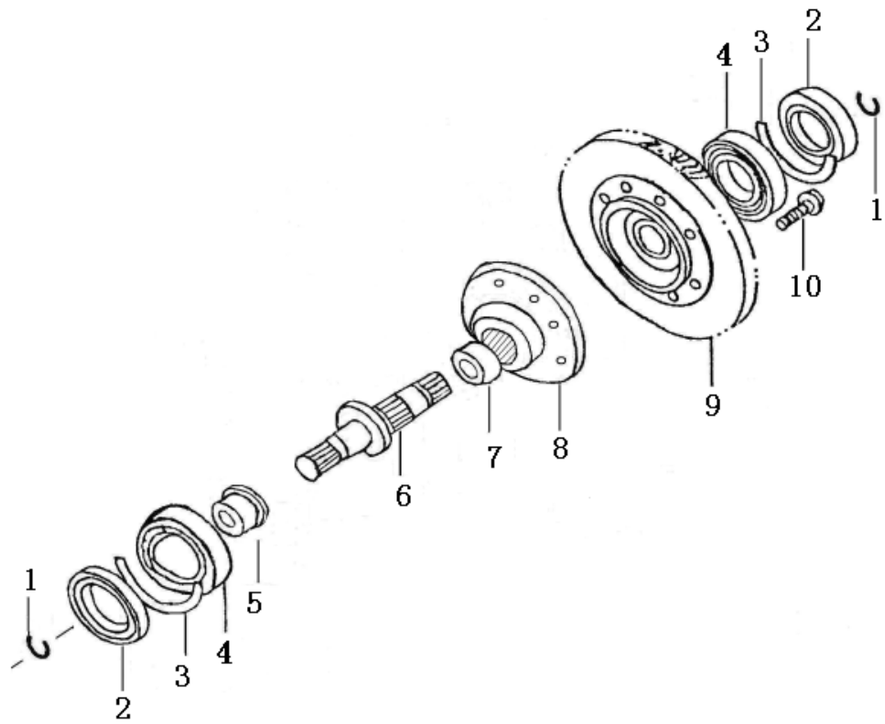

No.	ERP Code	Code name	Description	Q'ty
1	02.DLJ.MQC4-2303016	MQC4-2303016	Steel cable baffle ring	2
2	02.DLJ.MQC4-1701090	MQC4-1701090	Differential seal ring assembly	2
3	02.DLJ.MQC4-1701014	MQC4-1701014	Thrust ring of Differential	2
4	02.DLJ.GB/T276-94 6207-Z/P63	GB/T276-1994	Endocentric ball bearing 6207Z/P63	2
5	02.DLJ.4T06C-2303013	4T06C-2303013	Bushing ring 1	1
6	02.DLJ.4T06C-2303012	4T06C-2303012	Output shaft	1
7	02.DLJ.4T06C-2303014	4T06C-2303014	Bushing ring 2	1
8	02.DLJ.4T06C-2303011	4T06C-2303011	Connection plate	1
9	02.DLJ.4T06-2303021	4T06-2303021	Main reduction gear	1
10	02.DLJ.GB5789-86 M10x.25x0-10.9	GB/T5789-1986	Bolt M10×1.25×25-10.9	8

FIRST SHAFT AND COUNTERSHAFT

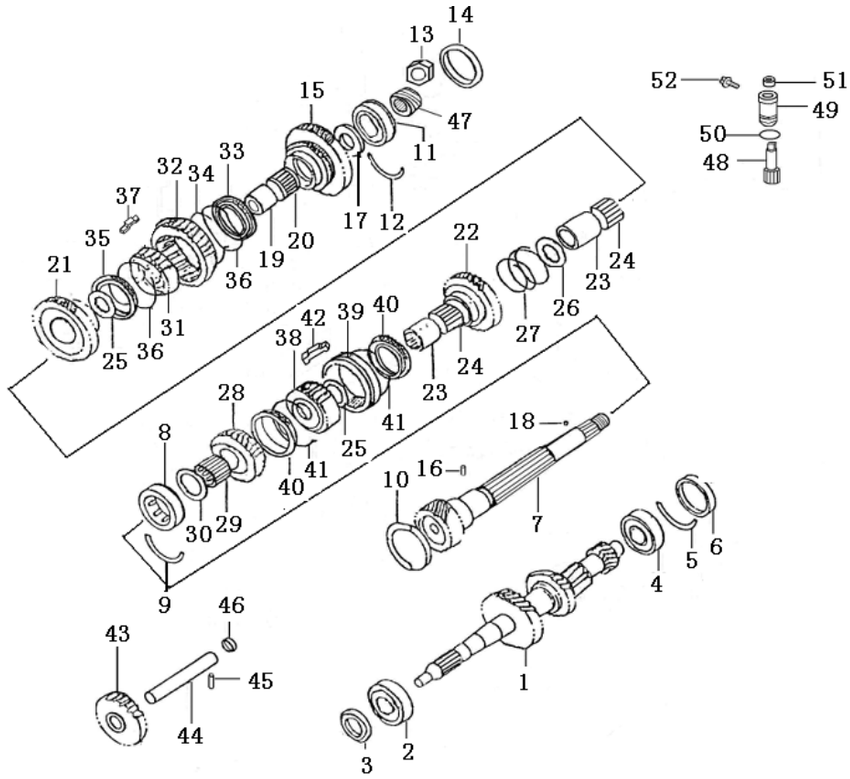

No.	ERP Code	Code name	Description	Q'ty
1	02.DLJ. 4T06CA1-1701130	4T06CA1-1701130	Input shaft assembly	1
2	02.DLJ.GB/T276-94 6204-2RS/P53	GB/T276-1994	Rearing 6204-2RS/P53	1
3	02.DLJ. MQC4-1701310	MQC4-1701310	The first shaft seal ring assembly	1
4	02.DLJ.GB/T276-94 6203-2RS/P53	GB/T276-1994	Rearing 6303-2RS/P53	1
5	02.DLJ. MQC4-1701011	MQC4-1701011	Thrust ring of the first shaft bearing	1
6	02.DLJ. MQC4-1701120	MQC4-1701120	The first shaft seal cap assembly	1
7	02.DLJ.4T06-1701201	4T06-1701201	Countershaft	1
8	02.DLJ.MQC4-1701250	MQC4-1701250	Cylindrical roller bearing with locking notch and without inner circle	1
9	02.DLJ.MQC4-1701013	MQC4-1701013	Thrust ring of countershaft bearing(right)	1
10	02.DLJ.MQC4-1701060	MQC4-1701060	Sealing cap assembly of countershaft(right)	1
11	02.DLJ.GB/T276-94 6304N/P53	GB/T276-94	Endocentric ball rearing 6304N/P53	1
12	02.DLJ.MQC4-1701012	MQC4-1701012	Thrust ring of countershaft bearing(left)	1
13	02.DLJ.MQC4-1701219	MQC4-1701219	Tight nut of countershaft	1
14	02.DLJ.MQC4-1701050	MQC4-1701050	Sealing cap assembly of countershaft(right)	1
15	02.DLJ.4T06-1701211	4T06-1701211	The first gear of countershaft	1

16	02.DLJ.GB309-84 P2×7.8	GB309-84	Needle P2×7.8	1
17	02.DLJ.MQC4-1701203	MQC4-1701203	The first gear gasket of countershaft	1
18	02.DLJ.GB308-84 4,7625G60b	GB308-84	Steel ball 4.7625	1
19	02.DLJ.MQC4-1701204	MQC4-1701204	First gear bushing ring of countershaft	1
20	02.DLJ.GB5846-86 K253023	GB5846-86	Needle bearing K253023	1
21	02.DLJ.4T06-1701212	4T06-1701212	The second gear of countershaft	1
22	02.DLJ.4T06CA1-1701213	4T06CA1-1701213	The third gear of countershaft	1
23	02.DLJ.MQC4-1701205	MQC4-1701205	The second and the third gear bushing	2
24	02.DLJ.5846—K303520	GB5846-86	Needle bearing K303520	2
25	02.DLJ.MQC4-1701206	MQC4-1701206	The second and the third gears gasket	2
26	02.DLJ.MQC4-1701208	MQC4-1701208	The third gear spacer	1
27	02.DLJ.MQC4-1701207	MQC4-1701207	The second and the third gears pressure	1
28	02.DLJ.4T06CA1-1701214	4T06CA1-1701214	The fourth gear of countershaft	1
29	02.DLJ.GB5846-86 K253020	GB5846-86	Needle bearing K253020	1
30	02.DLJ.MQC4-1701209	MQC4-1701209	The fourth gear gasket	1
31	02.DLJ.MQC4-1701232	MQC4-1701232	Low synchronizer shell	1
32	02.DLJ.MQC4-1701231	MQC4-1701231	Low synchronizer sleeve	1
33	02.DLJ.MQC4-1701215	MQC4-1701215	Low synchronizer ring(left)	1
34	02.DLJ.MQC4-1701217	MQC4-1701217	Low synchronizer ring spring(left)	1
35	02.DLJ.MQC4-1701216	MQC4-1701216	Low synchronizer ring(right)	1
36	02.DLJ.MQC4-1701233	MQC4-1701233	Low synchronizer spring	2
37	02.DLJ.MQC4-1701234	MQC4-1701234	Synchronizer guide spring	3
38	02.DLJ.MQC4-1701242	MQC4-1701242	High synchronizer ring(left)	1
39	02.DLJ.MQC4-1701241	MQC4-1701241	High synchronizer sleeve (left)	1
40	02.DLJ.MQC4-1701218	MQC4-1701218	High synchronizer ring(right)	2
41	02.DLJ.MQC4-1701243	MQC4-1701243	High synchronizer spring	2
42	02.DLJ.MQC4-1701234	MQC4-1701234	Synchronizer guide spring	3
43	02.DLJ.MQC4-1701080	MQC4-1701080	Racing gear of reverse gear	1
44	02.DLJ.MQC4-1701015	MQC4-1701015	Reverse gear shaft	1
45	02.DLJ.GB119-86 D5x13	GB119-86	Pin D5×13	1
46	02.DLJ.MQC4-1701070	MQC4-1701070	Sealing cap assembly of reverse gear	1
47	02.DLJ.MQC4-1701202	MQC4-1701202	Speed gage worm	1
48	02.DLJ.MQC4-1701209	MQC4-1701029	Speed gage worm wheel	1
49	02.DLJ.MQC4-1701400	MQC4-1701400	Speed gage worm wheel bushing ring	1
50	02.DLJ.GB3452,1-82 19X1.8	GB3452.1-82	“O” Type seal ring19×1.8	1
51	02.DLJ.MQC4-1701410	MQC4-1701410	Seal ring assembly of speed gage worm	1
52	02.DLJ.MQC4-1701028	MQC4-1701028	Speed gage thrust bolt	1

GEAR SHIFTED GEAR FORK

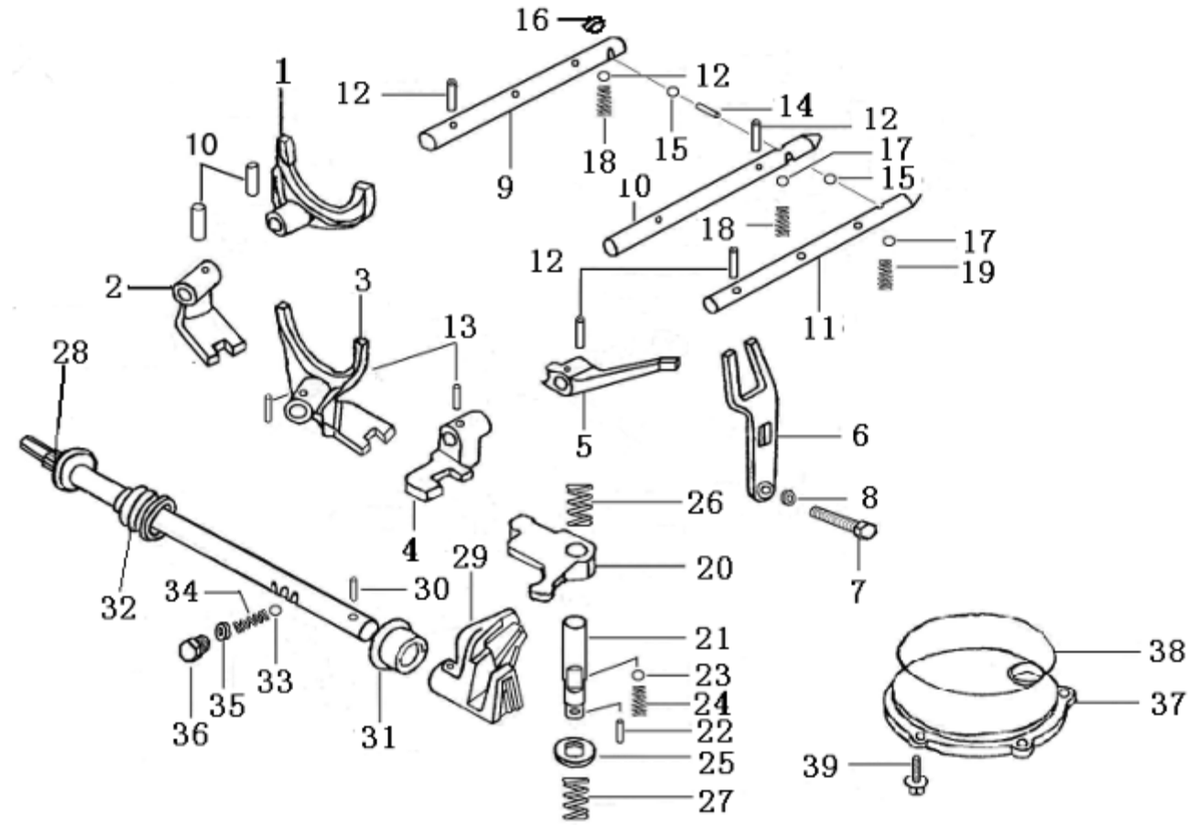

No.	ERP Code	Code name	Description	Q'ty
1	02.DLJ.MQC4-1702014	MQC4-1702014	Shift fork for the first gear	1
2	02.DLJ.MQC4-1702013	MQC4-1702013	Shift fork for the first and second gear	1
3	02.DLJ.MQC4-1702015	MQC4-1702015	Shift fork for the third and fourth gear	1
4	02.DLJ.MQC4-1702012	MQC4-1702012	Reverse gear shift fork	1
5	02.DLJ.MQC4-1702011	MQC4-1702011	Reverse gear shift cantilever	1
6	02.DLJ.MQC4-1702060	MQC4-1702060	Shift fork assembly of reverse gear	1
7	02.DLJ.GB5783-86 M10×1.25×33-4h	GB5783-86	Bolt M10×1.25×35	1
8	02.DLJ.MQC4-1702019	MQC4-1702019	Shift fork washer of reverse gear	1
9	02.DLJ.MQC4-1702017	MQC4-1702017	Shift lever for the first and second gear	1
10	02.DLJ.MQC4-1702018	MQC4-1702018	Shift lever for the third and fourth gear	1
11	02.DLJ.MQC4-1702016	MQC4-1702016	Reverse gear shift lever	1
12	02.DLJ.GB879-86 4,5X18	GB879-86	Pin 4.5×18	4
13	02.DLJ.GB879-86 4,5X20	GB879-86	Pin 4.5×20	4
14	02.DLJ.GB309-84 3X9,8	GB309-84	Needle 3×9.8	1
15	02.DLJ.GB308-84 9.5250G606	GB308-84	Steel ball 9.525	2

16	02.DLJ.MQC4-1701021	MQC4-1701021	Hole plug	1
17	02.DLJ.GB308-84 7.9375606	GB308-84	Steel ball 7.9375	3
18	02.DLJ.MQC4-1702021	MQC4-1702021	Locating spring of high and low speed shit lever	2
19	02.DLJ.MQC4-1702022	MQC4-1702022	Locating spring	1
20	02.DLJ.MQC4-1702082	MQC4-1702082	Transposition Rocker shaft	1
21	02.DLJ.MQC4-1702081	MQC4-1702081	Transposition shaft	1
22	02.DLJ.GB119-86 D4X8	GB119-86	Pin D4X8	1
23	02.DLJ.GB308-84 7.9375G606	GB308-84	Steel ball 7.9375G606	1
24	02.DLJ.MQC4-1702029	MQC4-1702029	Spring of transposition shaft	1
25	02.DLJ.MQC4-1702026	MQC4-1702026	Transposition shaft washer	1
26	02.DLJ.MQC4-1702024	MQC4-1702024	Long spring of transposition shaft	1
27	02.DLJ.MQC4-1702025	MQC4-1702025	Short spring of transposition shaft	1
28	02.DLJ.4T06C-1702070	4T06C-1702070	Shift shaft assembly	1
29	02.DLJ.MQC4-1702028	MQC4-1702028	Transposition shaft rocker	1
30	02.DLJ.GB879-86 5X22	GB879-86	pin 5x22	1
31	02.DLJ.MQC4-1702040	MQC4-1702040	Seal ring assembly of shift shaft	1
32	02.DLJ.MQC4-1702027	MQC4-1702027	Dirt guard of shift shaft	1
33	02.DLJ.GB308-84 7.9375G60b	GB308-84	Steel ball 7.9375 G60b	1
34	02.DLJ.MQC4-1702022	MQC4-1702022	Locating spring	1
35	02.DLJ.MQC4-1702019	MQC4-1702019	Shift fork washer of reverse gear	1
36	02.DLJ.ZBT31033-88 M10×1.25×9	ZBT31033-88	Bolt M10×1.25×9	1
37	02.DLJ.MQC4-1702023	MQC4-1702023	Transposition shaft cap	1
38	02.DLJ.GB3452,1-82 9,5×2,65	GB3452.-82	“0”type seal ring 9.5×2.65	1
39	02.DLJ.GB5789-86 AM6X20	GB5789-86	Bolt AM6X20	1

air filter for usa

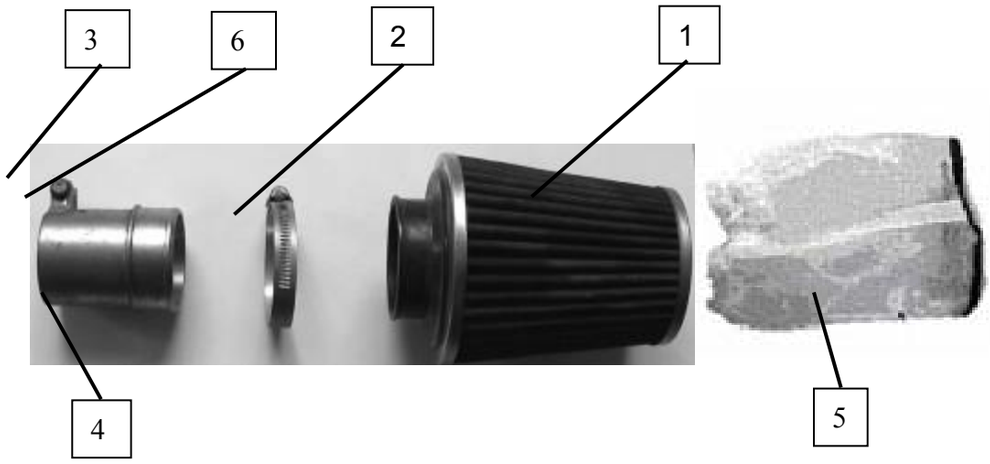

1	02.N650.04.05.01	N650.04.05.01.00	Air cleaner	1
2	02.N650.04.05.0001	N650.04.05.00.01	hoop（65-82）	1
3	03.01.5787-M6x30/05	5787-86 M6x30	Flange Bolt M6x30	1
4	02.N650.04.05.02	N650.04.05.02.00	Air filter joint	1
5	02.N650.04.05.03	N650.04.05.03.00	Air filter coat	1
6	03.02.SJ2842- M6/05	2842-M6	Flange nut m6	1

Frame

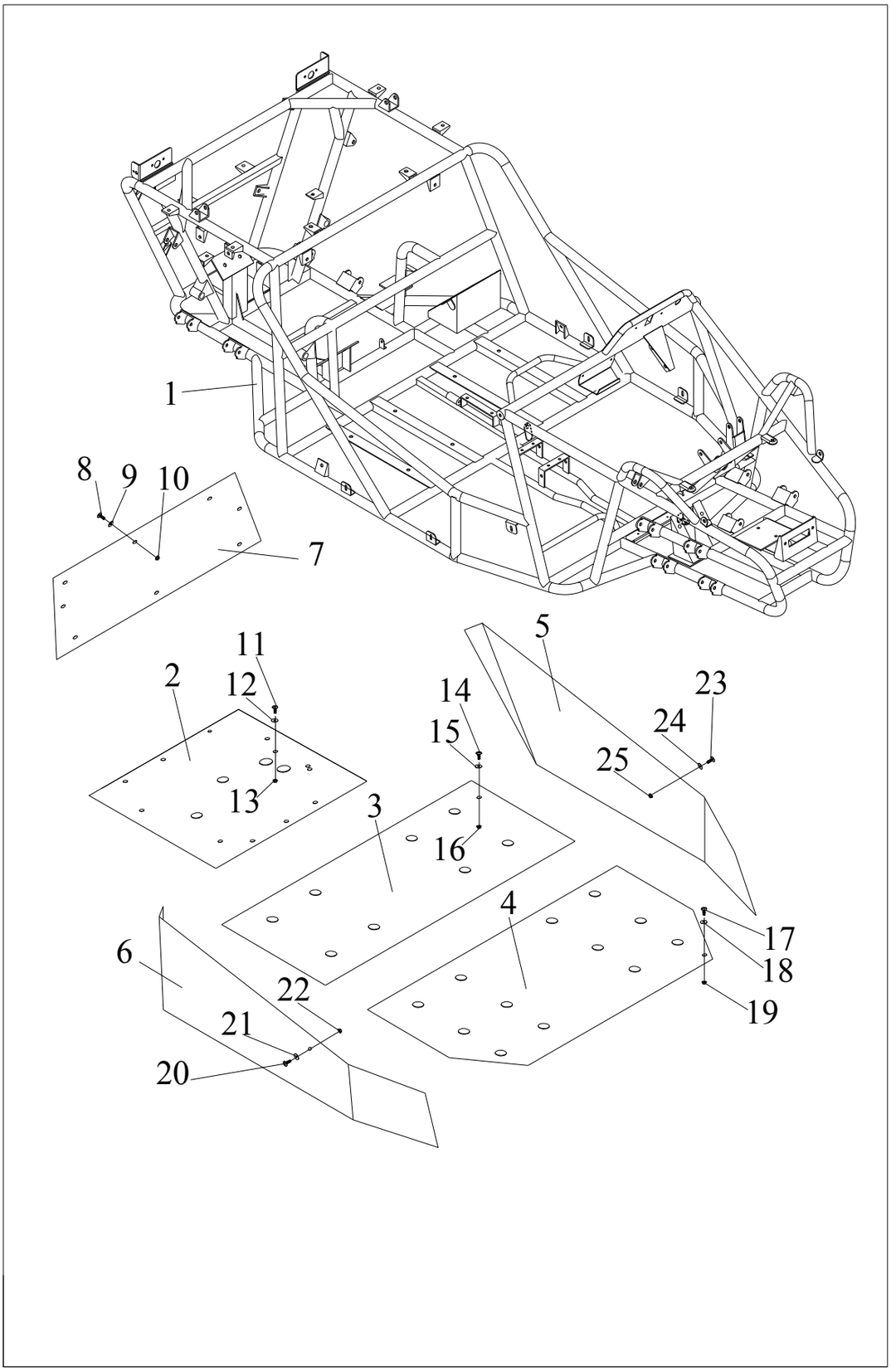

No.	ERP CODE	Code name	Description	Q'ty
1	02.DB650.01.01	DB650.01.01.00.00	Frame component	1
2	02.DB650.01.01.02.71	DB650.01.01.02.71	engine board	1
3	02.DB650.01.01.02.72	DB650.01.01.02.72	seat motherboard	1
4	02.DB650.01.01.02.73	DB650.01.01.02.73	front motherboard	1
5	02.DB650.01.01.02.74	DB650.01.01.02.74	left side board	1
6	02.DB650.01.01.02.75	DB650.01.01.02.75	right side board	1
7	02.DB650.01.01.02.70	DB650.01.01.02.70	seat rear board	1
8	03.01.D818-M6X16	D818-M6X16	Cross head screw M6*16	10
9	02.JD.0900008	JD0900008	Washer 6	10
10	03.02.6183,1-M6 /05	6183.1-M6	Self-locking nut M6	10
11	03.01.D818-M6X16	D818-M6X16	Cross head screw M6*16	11
12	02.JD.0900008	02.JD.0900008	Washer 6	11
13	03.02.6183,1-M6 /05	6183.1-M6	Self-locking nut M6	11
14	03.01.D818-M6X16	D818-M6X16	Cross head screw M6*16	17
15	JD0900008-W6	JD0900008	Washer 6	17
16	6183,1-M6/05	6183.1-M6	Self-locking nut M6	17
17	03.01.D818-M6X16	D818-M6X16	Cross head screw M6*16	25
18	JD0900008-W6	JD0900008	Washer 6	25
19	03.01.6183,1-M6	6183.1-M6	Self-locking nut M6	25
20	03.01.D818-M6X16	D818-M6X16	Cross head screw M6*16	10
21	02.JD.0900008	JD0900008-W6	Washer 6	10
22	03.02.6183,1-M6 /05	6183.1-M6	Self-locking nut M6	10
23	03.01.D818-M6X16	D818-M6X16	Cross head screw M6*16	10
24	02.JD.0900008	JD0900008	Washer 6	10
25	03.02.6183,1-M6 /05	6183.1-M6	Self-locking nut M6	10

Engine mount

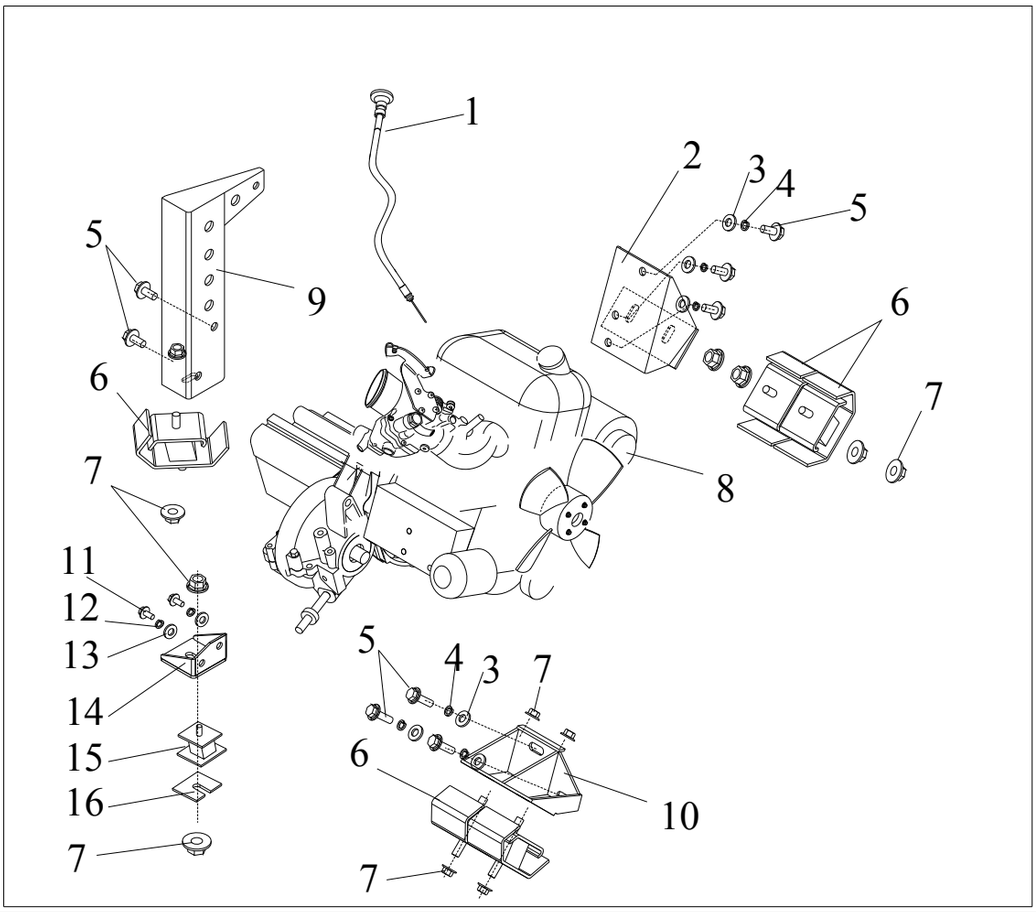

No.	Erp code	Code name	Description	Qty
1	02.D650.04.01.0500	D650.04.01.05.00	choke cable	1
2	02.N650.04.01.02	N650.04.01.02.00	engine mount ,front	1
3	03.03.95- Φ10X20X2/05	95-Φ10X20X2	washer Φ10 (11*20*2)	10
4	03.05.93-Φ20/05	93-Φ20	spring washer Φ10	10
5	03.01.5787-M10X1,25X25/05	5787- M10X1,25X25	bolt-washer M10*1.25*25	8
6	02.D650.04.01.0001	D650.04.01.00.01	engine rubber bumper	5
7	03.02.2842-M10X1,25/05	2842-M10X1,25	bolt-washer M10*1.25	12
8	02.D650.04.01.01	D650.04.01.01.00	engine(LJ276M)	1
9	02.D650.04.01.03	D650.04.01.03.00	engine mount ,left	1
10	02.D650.04.01.04A	D650.04.01.04.00A	engine mount ,rear	1
11	03.02.2842-M8X25/05	2842-M8X25	bolt-washer M8*25	2
12	03.04.93-Φ8/05	93-Φ8	spring washer Φ8	2
13	03.03.96,2-Φ8X24X2/05	96,2-Φ8X24X2	washer Φ8 (8.4*24*2)	2
14	02.D650.04.01.06	D650.04.01.06.00	engine mount ,middle	1
15	02.DS250.08.000003	DS250.08.00.00.03	small engine rubber bumper	1
16	02.D650.01.02.0002	D650.01.02.00.02	adjust washer	1

Gear shift

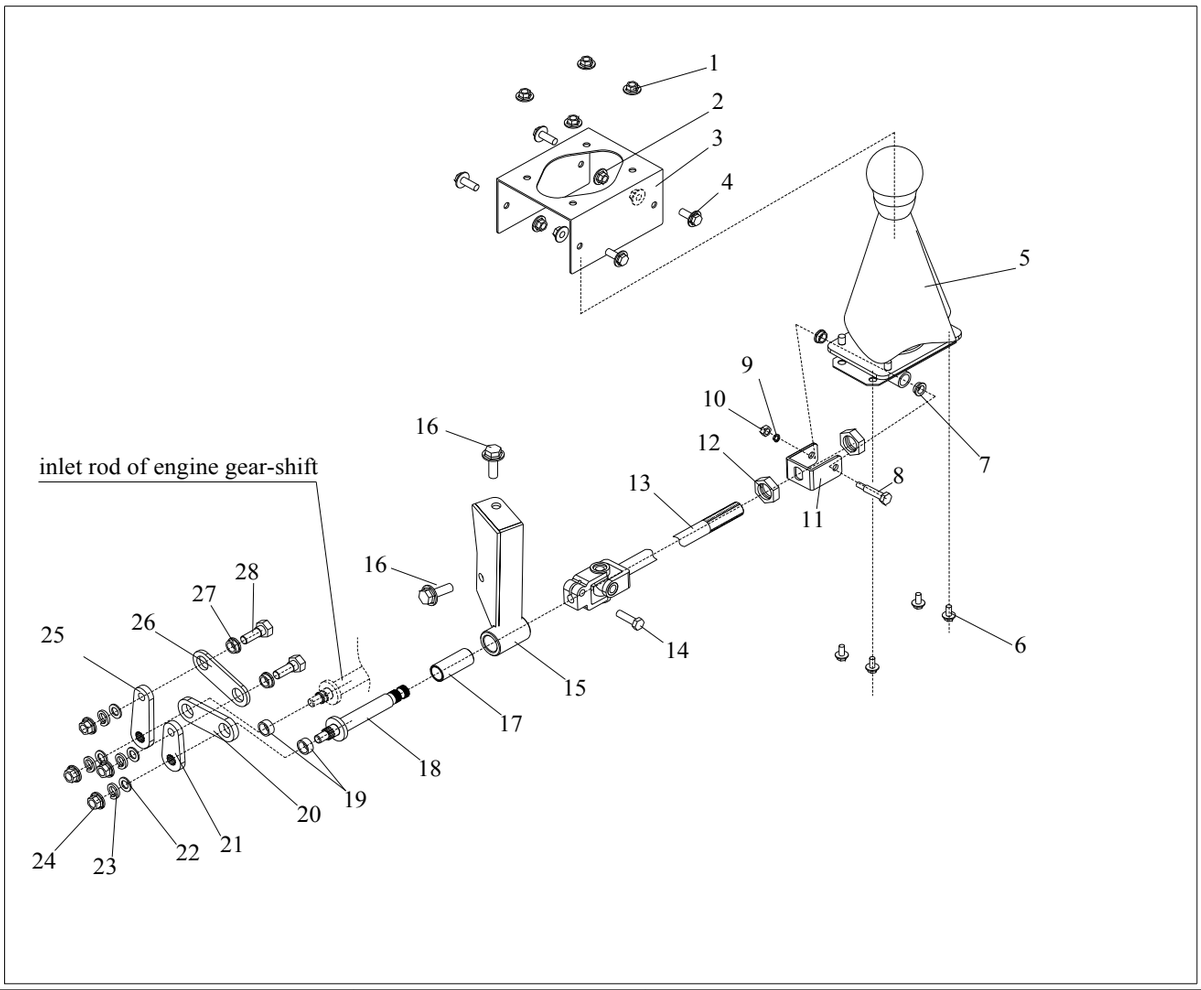

No.	ERP CODE	Code name	Description	Q'ty
1	03.02.6183,1-M8/05	6183.1-M8	self-locking nut M8	4
2	03.02.6183,1-M6/05	6183.1-M6	self-locking nut M6	4
3	02.D650.05.02.02.03	D650.05.02.02.03	shifter mount	1
4	03.01.5787-M6X20/05	5787-M6X20	bolt-washer M6*20	4
5	02.D650.05.02.02.04	D650.05.02.02.04	shifter assy	1
6	03.01.5787-M6X12/05	5787-M6X12	bolt-washer M6*12	4
7	02.650.05.02.02.02	D650.05.02.02.02	shift gear handgrip bush	2
8	02.D650.05.02.02.01	D650.05.02.02.01	shift gear handgrip screw axle	1
9	03.04. 93-Φ6/05	93-Φ6	spring washer%%c6	1
10	03.02. 6170-M6/05	6170-M6	nut M6 (m=5.2)	1
11	02.N650.05.02.05	N650.05.02.05.00	shift lever fork	1
12	03.02.6172.1-M14X1.5/05	6172.1-M14X1.5	Nut M14*1.5	2
13	02.D650.05.02.03	D650.05.02.03.00	shift lever	1
14	02.D650.05.02.04.01	D650.05.02.04.01	shift lever bolt M8	1
15	02.D650.05.02.04	D650.05.02.04.00	guide	1
16	03.01.5787-M10X1.25X20/05	5787-M10X1.25X20	bolt-washer M10*1.25*20	2
17	02.JD.0580002	JD0580002	nylon bush	1

18	02.D650.05.02.01.01	D650.05.02.01.01	shifter shaft	1
19	02.D650.05.02.01.02	D650.05.02.01.02	copper sleeve	2
20	02.D650.05.02.01.03	D650.05.02.01.03	thick pivot plate	1
21	02.D650.05.02.01.05	D650.05.02.01.05	short crank	1
22	03.03.95-Φ10X18X1,5/05	95-Φ10X18X1.5	washer %%c10(%%c10.5*%%c18*%%c1.6)	2
23	03.04. 93-Φ10/05	93-Φ10	spring washer %%c10	2
24	03.02.SJ2842-M10X1,25/05	SJ2842-M10X1.25	nut-washer M10*1.25	2
25	02.D650.05.02.01.04	D650.05.02.01.04	long crank	1
26	02.D650.05.02.01.06	D650.05.02.01.06	thin pivot plate	1
27	02.D650.05.02.01.08	D650.05.02.01.08	thin rod copper flange cover	2
28	02.D650.05.02.01.07	D650.05.02.01.07	threaded shaft	2

Steering assy

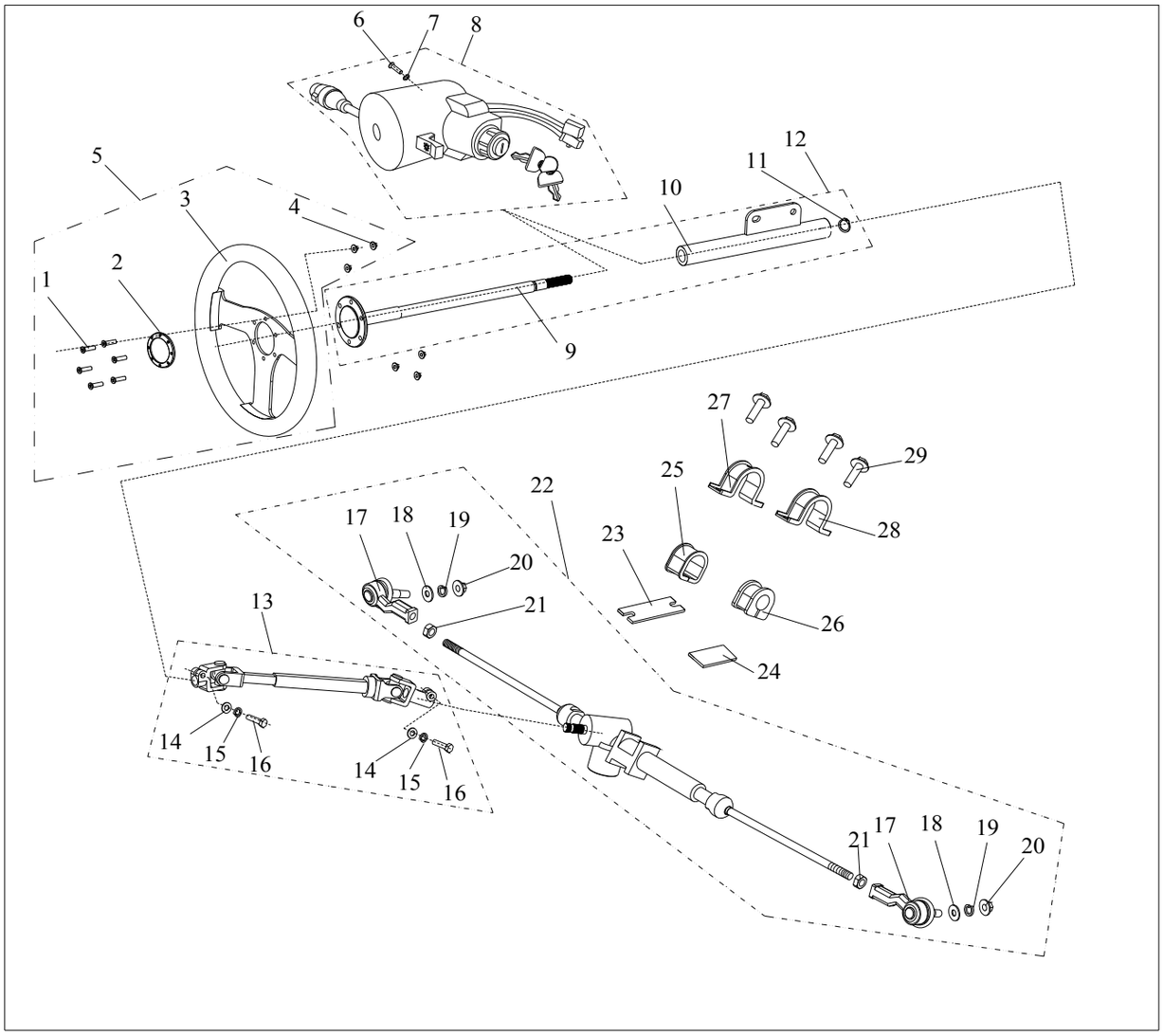

No.	ERP CODE	Code name	Description	Q'ty
1	03.01.70,3-M6x20/05	70.3-M6X20	M6*20 screw	6
2	02.TR1100.05.01.0002-3	TR1100.05.01.00.02-3	plastic cover	1
3	02.TR1100.05.01.0002	TR1100.05.01.00.02	350steering wheel	1
4	03.02.6183,1-M6/05	6183.1-M6	M6 self-locking nut	6
5	02.TR1100.05.01	TR1100.05.01.00.00	steering wheel subassembly	1
6	03.07.819,1-M6X10/05	819.1-M6X10	bolt M6*10	1
7	03.04.93-Φ6/05	93-Φ6	spring washer %%c6	1
8	02.N650.06.00.18	N650.06.00.18.00	integrated switch assy	1
9	02.D650.05.01.01.01	D650.05.01.01.01	steering wheel shaft	1
10	02.E650.05.01.01.02	E650.05.01.01.02	steering column housing	1
11	03.09.894,1-Φ15/05	894.1-Φ15	circlip %%c15, external	1
12	02.D650.05.01.01	D650.05.01.01.00	steering column assy	1
13	02.D650.05.01.02	D650.05.01.02.00	steering universal rod	1
14	03.03.96-Φ8X24X2/05	96-Φ8X24X2	washer %%c8 (8.4*24*2)	2

15	03.04.93-Φ8/05	93-Φ8	spring washer %%c8	2
16	03.01.5782-M8X25/05	5782-M8X25	bolt M8*25	2
17	02.D650.05.01.03.01	D650.05.01.03.01	tie rod end	2
18	03.03.95-Φ10X28X2/05	95-Φ10X28X2	washer %%c10	2
19	03.04.93-Φ10/05	93-Φ10	spring washer %%c10	2
20	03.02.6172,2-M10X1.25/05	6172.2-M10X1.25	nut lock M10*1.25(nylon)	2
21	03.02.6170-M12X1,5/05	6170-M12X1.5	nut M12*1.5	2
22	02.D650.05.01.03	D650.05.01.03.00	steering gear box	1
23	02.D650.05.01.0006	D650.05.01.00.06	big iron cushion	1
24	02.D650.05.01.0005	D650.05.01.00.05	small iron cushion	1
25	02.D650.05.01.0004	D650.05.01.00.04	thin rubber cover	1
26	02.D650.05.01.0003	D650.05.01.00.03	thick rubber cover	1
27	02.D650.05.01.0002-1	D650.05.01.00.02-1	mounting rack(hole)	1
28	02.D650.05.01.0002-2	D650.05.01.00.02-2	mounting rack(no hole)	1
29	03.01.5787-M10X1.25X25/05	5787-M10X1.25X25	bolt washer M10*1.25*25	4

Pedal control and park brake

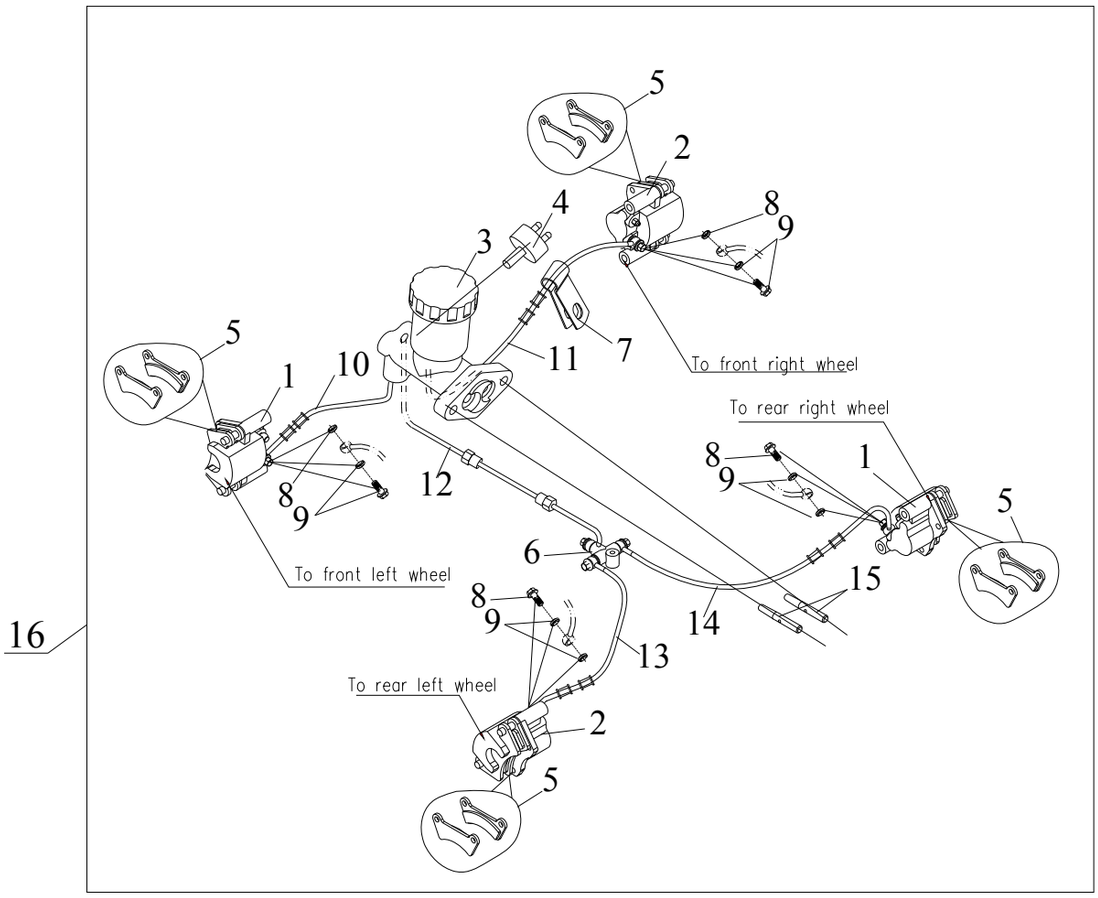

No.	ERP CODE	Code name	Description	Q'ty
1	02.D650.07.01.01.08	D650.07.01.01.08	disc brake with floating caliper,front	2
2	02.D650.07.01.01.09	D650.07.01.01.09	disc brake with floating caliper,rear	2
3	02.DN250.04.01.01	DN250.04.01.01.00	Master cylinder assy	1
4	02.DLJ.JK613B	JK613B	hydraulic power brake valve	1
5	02.D650.07.01.01.10	D650.07.01.01.10	hydraulic brake pads	4 set
6	02.DLJ.ZJ609.F02-01	ZJ609.F02-01	hydraulic threeway valve	1
7	02.TR1100.07.01.01.02	TR1100.07.01.01.02	clip	8
8	02.DLJ.ZJGS.01-02	ZJGS.01-02	Hose bolt M10x1.25	10
9	02.DLJ.ZJGS.01-01	ZJGS.01-01	Seal washer	20
10	02.D650.07.01.01.04	D650.07.01.01.04	hydraulic brake hose,front,left	1
11	02.D650.07.01.01.03	D650.07.01.01.03	hydraulic brake hose,front,right	1
12	02.D650.07.01.01.07	D650.07.01.01.07	hydraulic brake hose,middle	1
13	02.D650.07.01.01.06	D650.07.01.01.06	hydraulic brake hose,rear,left	1
14	02.D650.07.01.01.05	D650.07.01.01.05	hydraulic brake hose,rear,right	1
15	02.D650.07.01.0004A	D650.07.01.00.04A	Master cylinder rod	2
16	02.D650.07.01.01	D650.07.01.01.00	four caliper hydraulic brake assy	1

parking brake assy

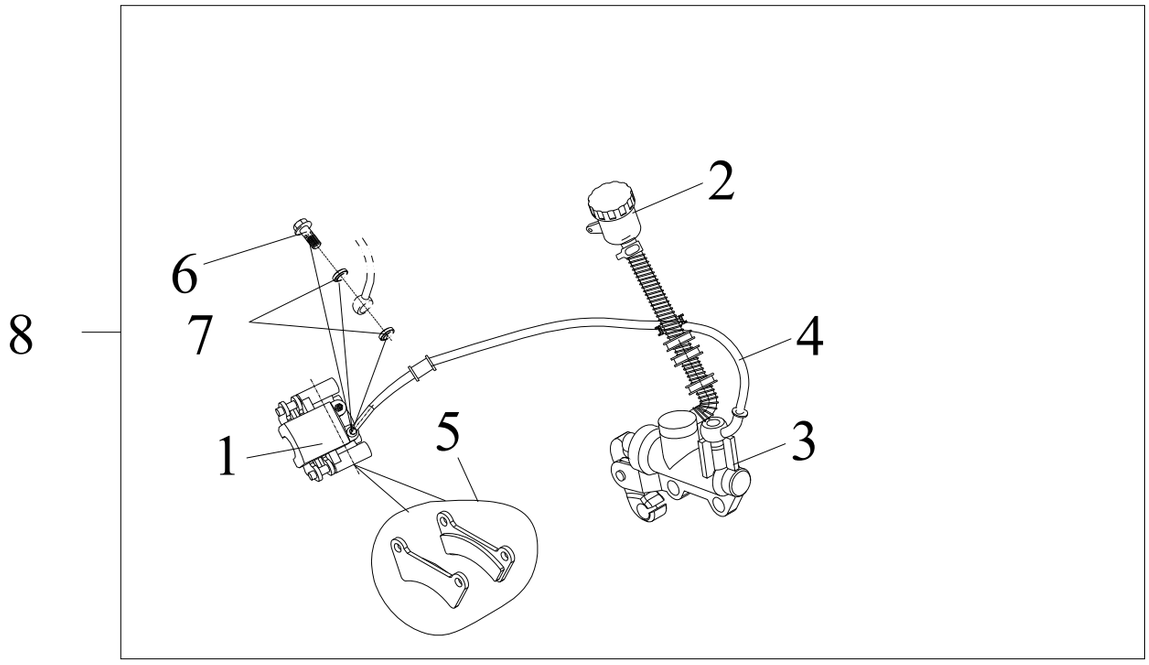

No.	ERP CODE	Code name	Description	Q'ty
1	02.SV800.07.01.01.01	SV800.07.01.01.01	disc brake with floating caliper,front	1
2	02.D650.07.02.03.02	D650.07.02.03.02	single hydraulic oil cup	1
3	02.D650.07.02.03.03	D650.07.02.03.03	single hydraulic pump	1
4	02.D650.07.02.03.04	D650.07.02.03.04	pipe	1
5	02.D650.07.01.01.10	D650.07.01.01.10	hydraulic brake pads	1 set
6	02.DLJ.ZJGS.01-02	ZJGS.01-02	Hose bolt M10x1.25	1
7	02.DLJ.ZJGS.01-01	ZJGS.01-01	Seal washer	2
8	02.D650.07.02.03	D650.07.02.03.00	parking brake assy	1

Throttle and park assy

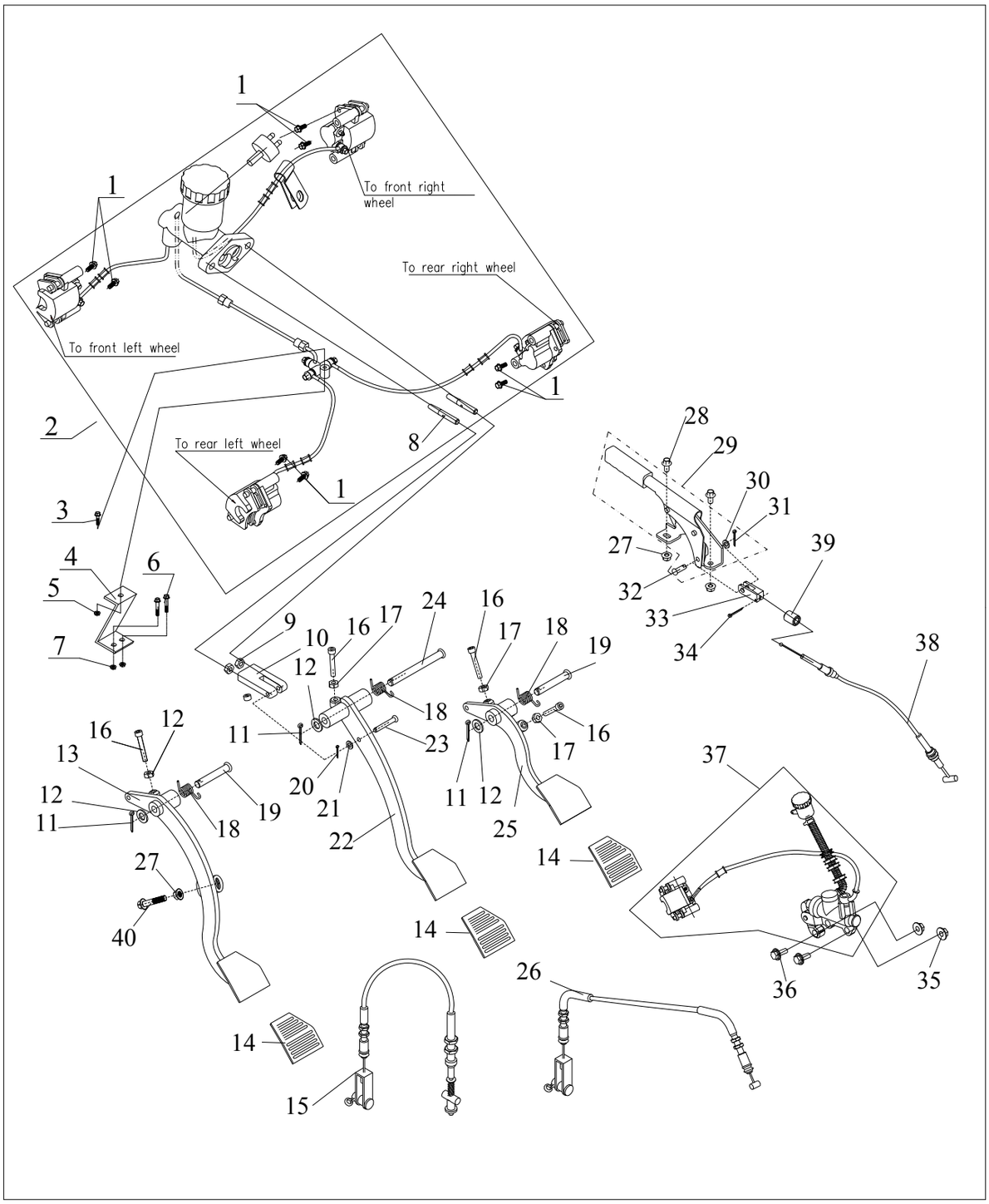

No.	ERP code	Code name	Description	Q't y
1	03.01.5787-M8X20/05	5787-M8X20	Flange bolt M8*20	8
2	02.D650.07.01.01	D650.07.01.01.00	four caliper hydraulic brake assy	1

3	03.01.5787-M6X20 /05	5787-M6X20	Bolt-washer M6*20	1
4	02.D1600.01.02.0008	D1600.01.02.00.08	support	1
5	03.02.6183,1-M6/05	6183.1-M6	self-locking nut M6	1
6	03.01.5787-M6X20 /05	5787-M6X20	Bolt-washer M6*20	2
7	03.02.6183,1-M6/05	6183.1-M6	self-locking nut M6	2
8	02.D650.07.01.0004A	D650.07.01.00.04A	pushing bar	2
9	6172.1-M8	6172.1-M8	M8 nut	2
10	D650.07.01.00.03	D650.07.01.00.03	push rod holder	1
11	03.08.91-3.2X30/05	91-3.2X30	cotter pin 3.2*30	3
12	03.03.95-Φ 10X18X1,5/05	95-Φ10X18X1.5	φ10 washer(φ10.5*φ18*φ1.6)	3
13	02.D650.07.04.02	D650.07.04.02.00	clutch pedal	1
14	02.D650.07.01.0005	D650.07.01.00.05	pedal rubber cover	3
15	02.D650.07.04.01	D650.07.04.01.00	clutch cable	1
16	03.01.70,1-M6X55/05	70.1-M6X55	M6*55 socket head bolt	4
17	03.02. 6170-M6/05	6170-M6	M6 nut(m=5.2)	4
18	02.D250.10.003	D250.10.003	spring	3
19	03.07.882-φ10X60/05	882-φ10X60	φ10*60 pin roll	2
20	03.08.91-Φ2X25/05	91-Φ2X25	cotter pin φ2*25	1
21	03.03.95-Φ 6X13X1,5/05	95-Φ6X13X1.5	φ6 washer	1
22	02.D650.07.01.02	D650.07.01.02.00	brake pedal	1
23	03.07.882-6X40/05	882-6X40	φ6*40 pin roll	1
24	03.07.882-10X105/05	882-10X105	φ10*105 pin roll	1
25	02.D650.07.03.02	D650.07.03.02.00	throttle pedal	1
26	02.D650.07.03.01	D650.07.03.01.00	throttle cable	1
27				
28	03.01.5787-M8X20/05	5787-M8X20	M8*20 bolt	2
29	02.D650.07.02.01	D650.07.02.01.00	park assy	1
30	03.03.95-Φ 8X16X1,5/05	95-Φ8X16X1.5	φ8 washer	1
31	03.08.91-3.2X30/05	91-3.2X30	cotter pin 3.2*30	1
32	02.D650.07.02.01.01	D650.07.02.01.01	axle 8*24	1
33	02.D650.07.02.0001	D650.07.02.00.01	parking brake connection	1
34	03.08.91-3.2X30/05	91-3.2X30	cotter pin 3.2*30	1
35	02.D650.07.02.02	D650.07.02.02.00	M8 self-locking nut	2
36	02.D650.07.02.0002	D650.07.02.00.02	bolt-washer M8*30	2
37	02.D650.07.02.03	D650.07.02.03.00	parking brake assy	1
				1
38	02.D650.07.02.02	D650.07.02.02.00	park brake cable	
39	02.D800.07.02.0001	D800.07.02.00.01	steel bush	1
40				

Front housing

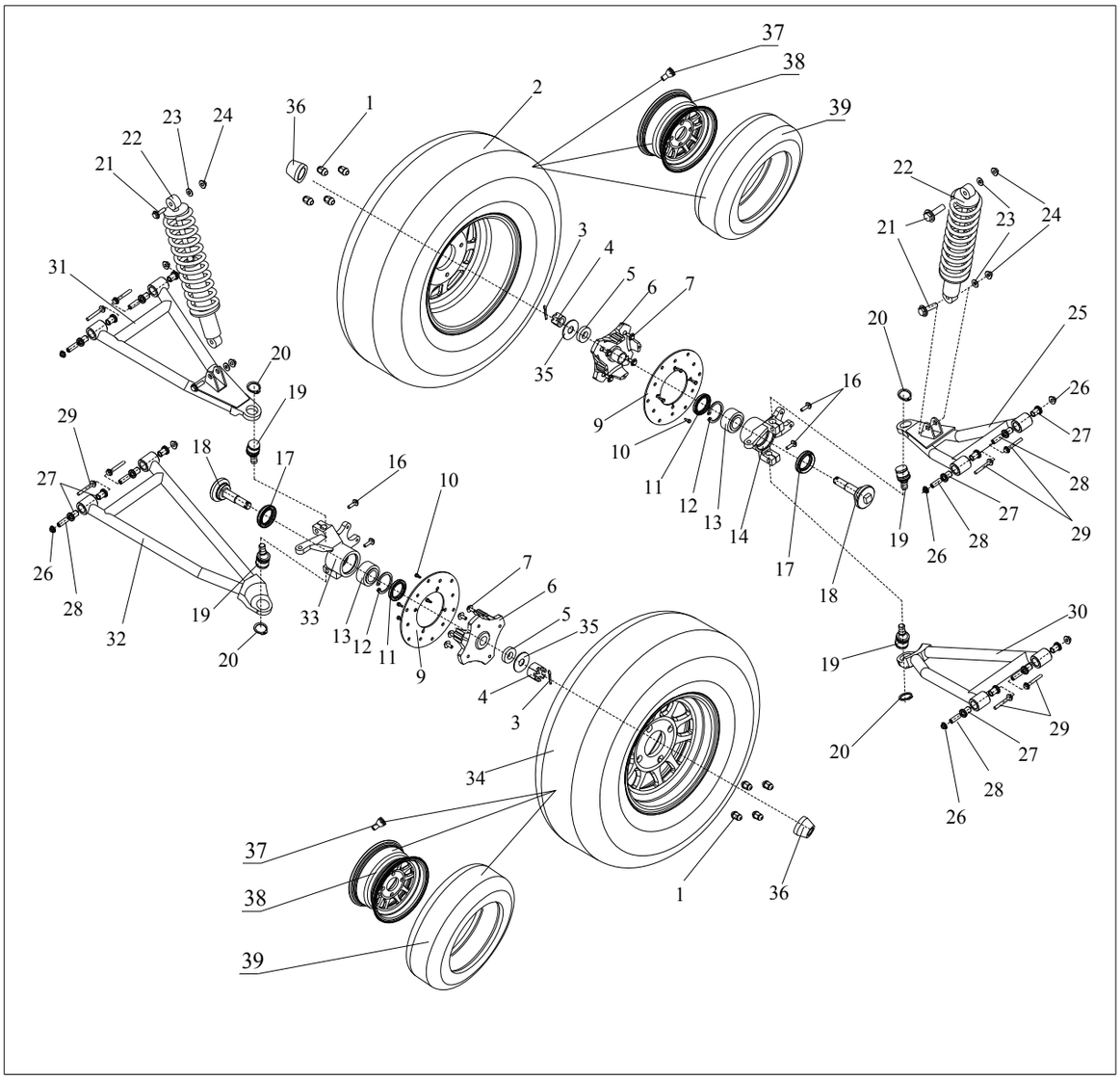

No.	ERP code	Code name	ENGLISH	Q'ty
1	02.S650.03.01.0002	S650.03.01.00.02	M12*1.5 wheel nut	8
2	02.S650.03.01.01A	S650.03.01.01.00A	left wheel(27*8-12)	1
3	03.08.91-4X40/05	91-4X40	cotter pin 4*40	2
4	03.02.9457-M18X1,5/05	9457-M18X1.5	nut-castle M18*1.5,front axle	2
5	02.D650.03.01.0008	D650.03.01.00.08	front axle washer	2
6	02.D650.03.01.0001A	D650.03.01.00.01A	front hub	2
7	02.D650.03.02.0003A	D650.03.02.00.03A	bolt M12*1.5,hub	8
8				
9	02.D650.03.02.0005	D650.03.02.00.05	brake disc	2
10	02.D650.03.02.0008	D650.03.02.00.08	bolt M6,brake disc	8

11	02.D650.03.01.0004	D650.03.01.00.04	seal (40X55X6)	2
12	03.09.893,2-Φ55/05	893.2-Φ55	circlipΦ55,internal	2
13	02.D650.03.01.0005	D650.03.01.00.05	front hub bearing(30X55X30X25)	2
14	02.D650.03.01.0007	D650.03.01.00.07	stub axle,L	1
15				
16	03.01.5787-M10X1.5X30X20/05	5787-M10X1.5X30X20	bolt-washer M10*1.5*30*20	4
17	02.D650.03.01.0006	D650.03.01.00.06	internal seal(40X58X7X5)	2
18	02.D650.03.01.0003	D650.03.01.00.03	front axle	2
19	02.D650.02.01.0003	D650.02.01.00.03	ball joint	4
20	03.09.894.2-Φ29	894.2-CΦ29	Φ29,external circlip	4
21	03.01.5787-M12X1.5X45X18/05	5787-M12X1.5X45X18	bolt-washer M12*1.5*45*18	4
22	02.D650.02.03.01	D650.02.03.01.00	front shock absorber	2
23	03.03.95-Φ16X30X1,2/05	95-Φ16X30X1.2	washer Φ16（Φ16.5*Φ30*2）	4
24	03.02.SJ2842-M12X1.5/05	SJ2842-M12X1.5	flange nut,M12*1.5	4
25	02.D650.02.01.03	D650.02.01.03.00	FL upper suspension arm	1
26	03.02.SJ2842-M10X1,25/05	SJ2842-M10X1.25	flange nut,M10*1.25	8
27	02.D650.02.01.0001	D650.02.01.00.01	suspension arm bush	8
28	02.D650.02.01.0002	D650.02.01.00.02	suspension arm spacer	4
29	03.01.5787-M10X1,25X75/05	5787-M10X1.25X75	bolt-washer M10*1.25*75*18	8
30	02.D650.02.01.04	D650.02.01.04.00	FL lower suspension arm	1
31	02.D650.02.01.01	D650.02.01.01.00	FR upper suspension arm	1
32	02.D650.02.01.02	D650.02.01.02.00	FR lower suspension arm	1
33	02.D650.03.01.0002	D650.03.01.00.02	stub axle R	1
34	02.S650.03.01.04A	S650.03.01.04.00A	right wheel(27*8-12)	1
35	02.D800.03.01.0010	D800.03.01.00.10	washer	2
36	02.JD.0360010	JD0360010	rubber dirt-proof boot	2
37	02.D650.03.01.01.03	D650.03.01.01.03	valve cock	2
38	02.S650.03.01.01.01	S650.03.01.01.01	front rim 12*6	2
39	02.S650.03.01.01.02A	S650.03.01.01.02A	front tire 27*8-12	2

Muffler

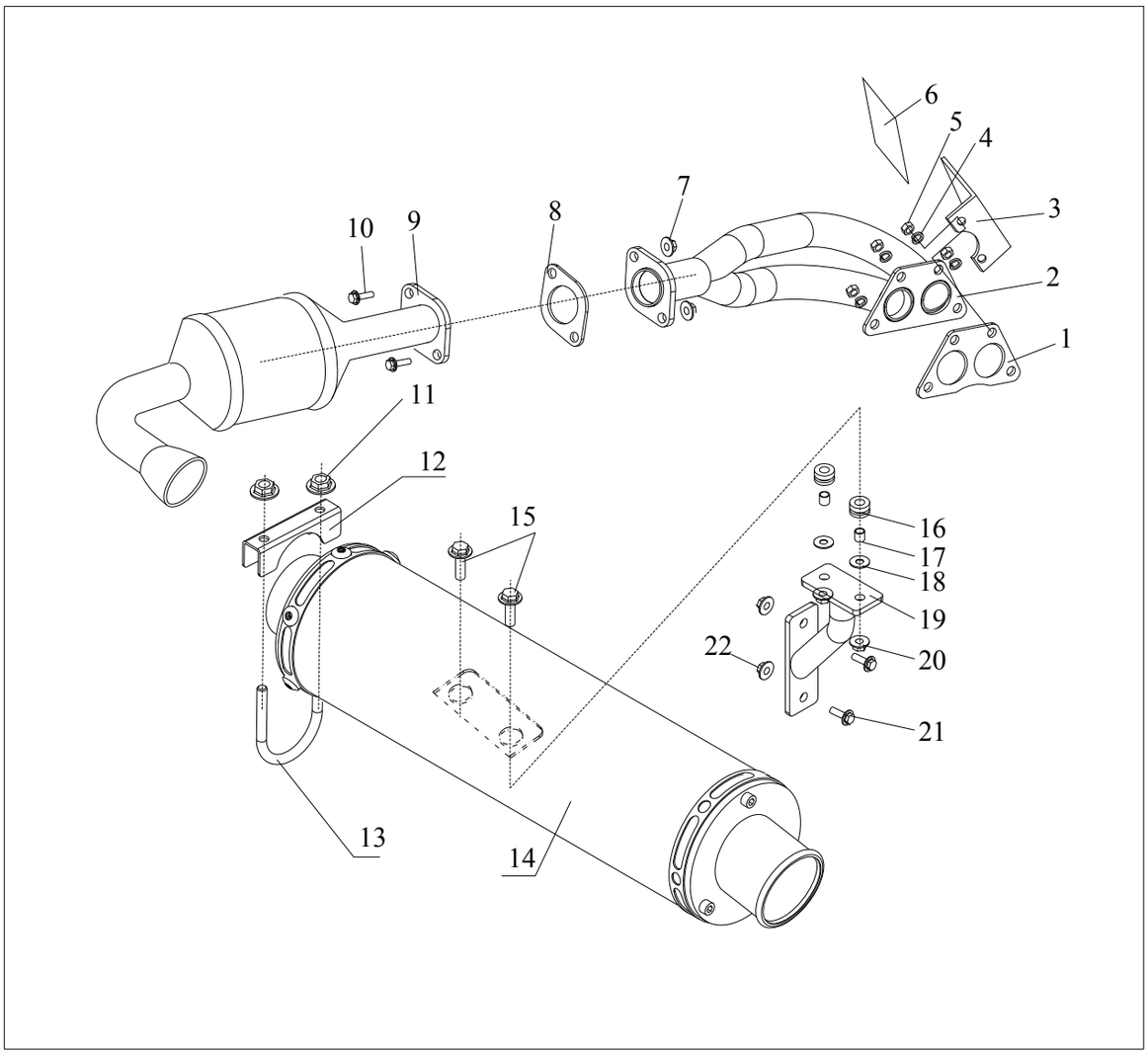

No.	ERP code	Code name	Description	Qty
1	02.DLJ.270Q－06006	270Q－06006	exhaust manifold gasket	1
2	02.D650.04.04.02	D650.04.04.02.00	front exhaust pipe	1
3	02.D650.04.04.0003	D650.04.04.00.03	front pipe shield	1
4	03.04.93-Φ8/05	93-Φ8	spring washer Φ8	4
5	03.02.6172,1-M8/05	6172.1-M8	nut M8(m=6.8)	4
6	02.D650.04.04.0004	D650.04.04.00.04	sheet of heat insulation (65*65)	1
7	03.02.6183,1-M8/05	6183.1-M8	nut self-lock M8	2
8	02.D650.04.04.0009	D650.04.04.00.09	cushion flange	1
9	02.D650.04.04.04A	D650.04.04.04.00A	catalac convertor	1
10	03.01.5787-M8X30/05	5787-M8X30	bolt washer M8*30	2
11	03.02.6183,1-M8/05	6183.1-M8	self-locking nut M8	2
12	02.D650.04.04.0008-1	D650.04.04.00.08-1	U clamp mount	1
13	02.D650.04.04.0008-2	D650.04.04.00.08-2	U clamp screw rod	1

14	02.D650.04.04.01B	D650.04.04.01.00B	long muffler	1
15	03.01.5787-M8X30/05	5787-M8X30	bolt-washer M8*30	2
16	02.JD.1910003A	JD1910003A	muffler rubber cover	2
17	02.JD.1910002	JD1910002	spacer	2
18	03.03.96-Φ8X24X2/05	96-Φ8X24X2	washer Φ8（Φ8.4*Φ24*2）	2
19	02.D650.04.04.03	D650.04.04.03.00	muffer bracket	1
20	03.02.6183.1-M8/05	6183.1-M8	self-lock M8	2
21	03.01.5787-M10X1,25X25/05	5787-M10X1.25X25	bolt washer M10*1.25*25	2
22	03.02.SJ2842-M10X1,25/05	SJ2842-M10X1.25	nut washer M10*1.25	2

Fuel tank and gasoline pump

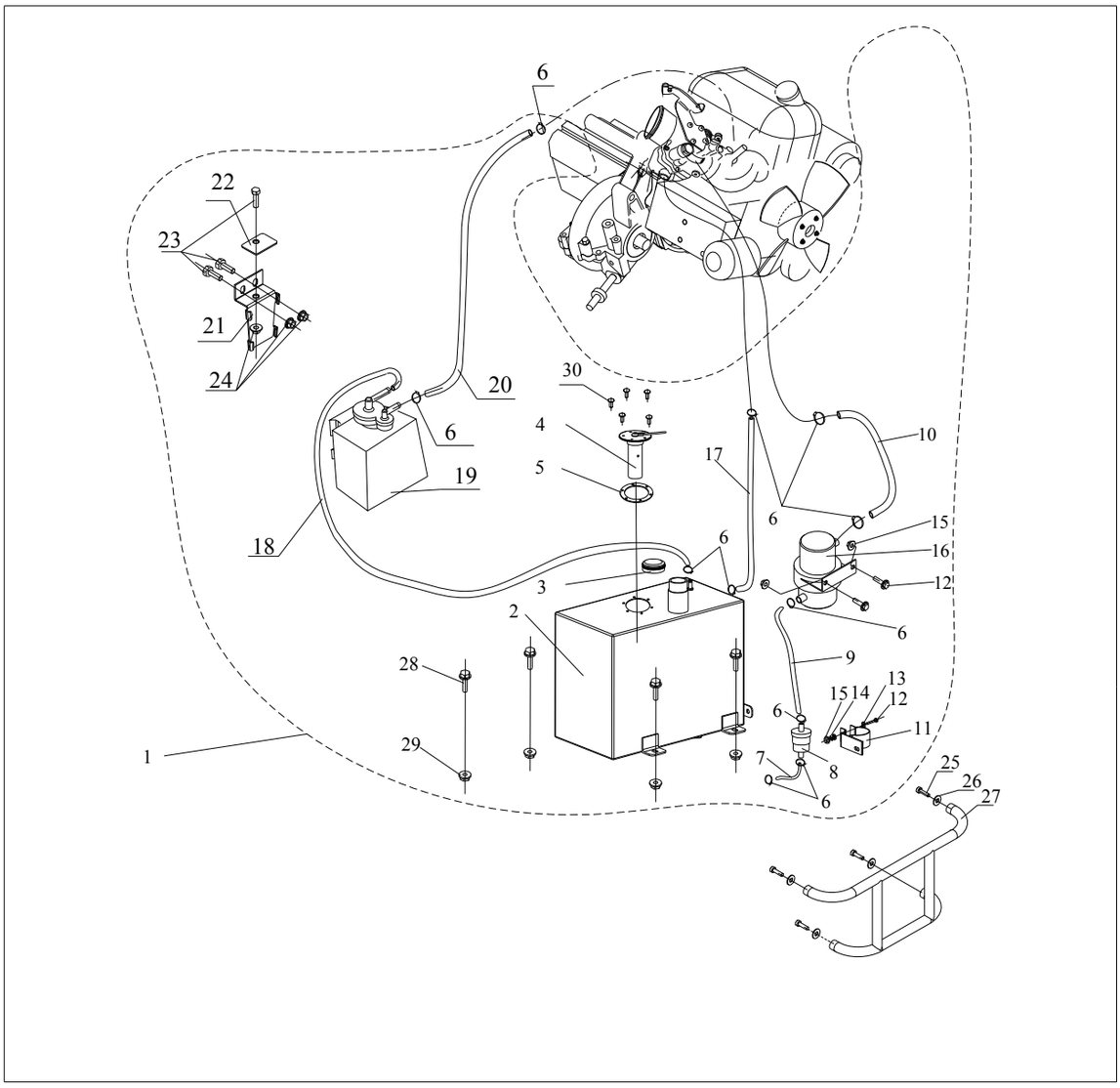

No.	ERP code	Code name	Description	Q'ty
1			fuel tank assy	1
2	02.D650.04.03.01B	D650.04.03.01.00B	fuel tank	1
3	02.SR2000.04.03.0003A	SR2000.04.03.00.03A	fuel tank cap	1
4	02.SR2000.04.03.03	SR2000.04.03.03.00	fuel level sensor	1
5	02.SR2000.04.03.03.01	SR2000.04.03.03.01	rubber washer	1
6	02.D650.04.03.0004	D650.04.03.00.04	hoop (10-16)	12
7	02.FTCARB-0816	FTCARB-0816	fuel hose(Φ 8x Φ 16 CARB)	0.2meter
8	02.D650.04.03.0005	D650.04.03.00.05	fuel filter	1
9	02.FTCARB-0816	FTCARB-0816	fuel hose(Φ 8x Φ 16	0.2mete

			CARB)	r
10	02.FTCARB-0816	FTCARB-0816	fuel hose(Φ 8x Φ 16 CARB)	0.4meter
11	02.D650.04.03.0010	D650.04.03.00.10	fuel filter clip	1
12	03.01.5787-M8X25/05	5787-M8X25	bolt-washer M8*25	1
13	03.03.95-Φ6X12X1/05	95-Φ6X12X1	washer Φ6	2
15	03.02.SJ2842-M8/05	SJ2842-M8	nut-washer M8	2
16	02.D650.04.03.02	D650.04.03.02.00	fuel pump	1
17	02.FTCARB-0816	FTCARB-0816	fuel hose(Φ 8x Φ 16 CARB)	0.4meter
18	02.FTCARB-0409	FTCARB-0409	fuel hose(Φ 4.5x Φ 9 CARB)	0.5meter
19	02.TR1100.04.06.01	TR1100.04.06.01.00	carbon canister	1
20	02.FTCARB-0409	FTCARB-0409	fuel hose(Φ 4.5x Φ 9 CARB)	0.5meter
21	02.D650.04.06.0001	D650.04.06.00.01	carbon can bracket	1
22	02.D650.04.06.0002	D650.04.06.00.02	carbon can plate	1
23	03.01.5787-M6X16/05	5787-M6X16	bolt-washer M6*16	3
24	03.02.SJ2842-M6/05	SJ2842-M6	washer nut M6	3
25	03.01.70,1-M12X30/05	70.1-M12X30	M12*30 socket head screw	4
26	03.03.96,2-Φ12X24X2/05	96.2-Φ12X24X2	washer Φ12 (Φ13* Φ 24*2.5)	4
27	02.D650.01.02.06	D650.01.02.06.00	rear bumper bar	1
28	03.01.5787-M10X20/05	5787-M10X20	bolt-washer M10*20	4
29	03.02.SJ2842-M10/05	SJ2842-M10	washer nut M10	4
30	03.01.5782-M4X10/05	5782-M4X10	bolt M4X10	5

rear cargo rack and roll bar

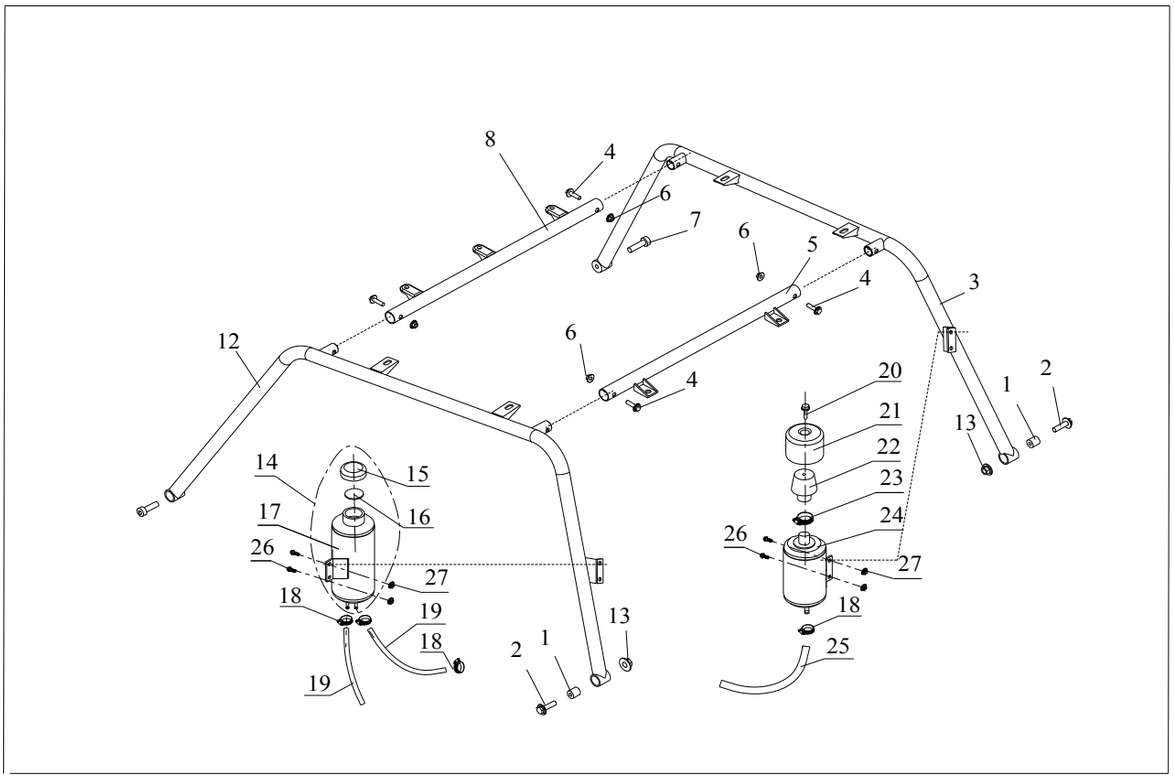

No.	ERP code	Code name	Description	Q'ty
1	02.D250.11.771	D250.11.771	nylon bush	2
2	03.01.5787-M12X1,5X30/05	5787-M12X1.5X30	bolt washer M12*1.5*30	2
3	02.D650.01.02.02B	D650.01.02.02.00B	right roll bar	1
4	03.01.5787-M10X1.25X45/05	5787-M10X1.25X45	bolt washer M10*1.25*45	4
5	02.D650.01.02.04	D650.01.02.04.00	rear cross bar	1
6	03.02.SJ2842-M10X1,25/05	6177.1-M10*1.25	nut washer M10*1.25	4
7	03.01.70.1-M12X1.5X30/05	70.1-M12X1.5X30	bolt hexagon M12*1.5*30	2
8	02.D650.01.02.03	D650.01.02.03.00	front cross bar	1
9				
10				
11				
12	02.D650.01.02.01B	D650.01.02.01.00B	left roll bar	1

13	03.02.SJ2842-M12X1,5/05	6177.1-M12X1.5	nut washer M12*1.5	2
14	02.D800.04.02.02	D800.04.02.02.00	reserve tank	1
15	02.D800.04.02.0001	D800.04.02.00.01	cap of reserve tank	1
16	02.D800.04.02.0002	D800.04.02.00.02	airproof washer of reserve tank	1
17	02.D800.04.02.0003	D800.04.02.00.03	takeoff reserve tank	1
18	02.D650.04.03.0004	D650.04.03.00.04	hoop(10-16)	7
19	02.D250.09004	D25009004	radiator connecting tube	1meter
20	03.01.5787-M6X16/05	5787-M6X16	bolt-washer M6*16	1
21	02.D650.04.07.0003	D650.04.07.00.03	oil separator cover	1
22	02.D650.04.07.0002	D650.04.07.00.02	oil separator air filter	1
23	02.SV800.04.07.0001	SV800.04.07.00.01	hoop(21-38)	1
24	02.D650.04.07.0001	D650.04.07.00.01	oil separator tank	1
25	02.D650.04.05.0003	D650.04.05.00.03	recycle exhaust gas tube	1
26	03.01.5787-M8X20/05	5787-M8*20	bolt-washer M8*20	4
27	03.02.6183,1-M8/05	6183.1-M8	self-locking nut M8	4

Rear housing

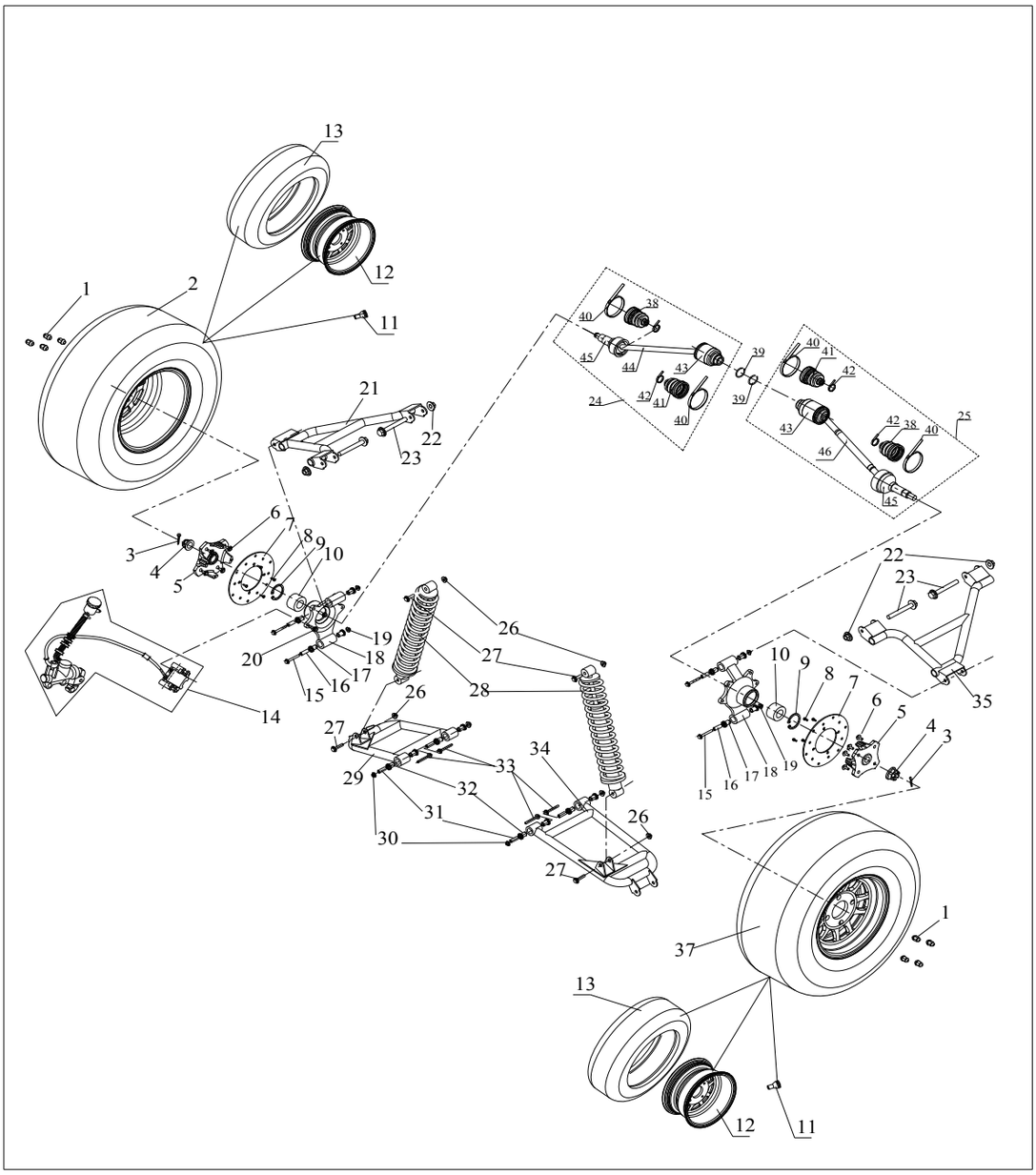

No.	ERP code	Code name	Description	Q'ty

1	02.S650.03.02.0002	S650.03.02.00.02	wheel nut M12*1.5	8
2	02.D650.03.02.01H	D650.03.02.01.00H	(F938)wheel(25*11-12),BL	1
3	03.08.91-4X40/05	91-4X40	cotter pin 4*40	2
4	02.DLJ.JGC2202-K	JGC2202-K	nut-castle M22*1.5,rear shaft	2
5	02.D650.03.02.0004A	D650.03.02.00.04A	disk base	2
6	02.D650.03.02.0003A	D650.03.02.00.03A	M12*1.5 bolt	16
7	02.D650.03.02.0005	D650.03.02.00.05	brake disc	2
8	02.D650.03.02.0008	D650.03.02.00.08	bolt M6,butterfly disc	8
9	03.09.893.2-Φ55/05	893.2-CΦ55	Φ55,internal circlip	2
10	02.D650.03.02.0007	D650.03.02.00.07	(Φ30XΦ55X32),rear hub bearing	2
11	02.D650.03.01.01.03	D650.03.01.01.03	valve cock	2
12	02S650.03.02.01.01	S650.03.02.01.01	rear rim 12*8	2
13	02.S650.03.02.01.02A	S650.03.02.01.02A	F938 rear off-road tire 27x11-12	2
14	02.D650.07.02.03	D650.07.02.03.00	parking brake assy	1
15	03.01.5787-M10X1,25X100/05	5787-M10X1.25X100	bolt-washer M10*1.25*100*20	4
16	02.D650.02.02.0002	D650.02.02.00.02	shaft carrier spacer	4
17	02.D650.02.02.0001	D650.02.02.00.01	shaft carrier bush	8
18	02.D650.03.02.0001	D650.03.02.00.01	shaft carrier	2
19	03.02.SJ2842-M10X1,25/05	SJ2842-M10X1.25	Nut-washer M10*1.25	4
20	03.01.5787-M8X20/05	5787-M8X20	bolt-washer M8*20	4
21	02.D650.02.02.03	D650.02.02.03.00	RL upper suspension arm	2
22	03.02.SJ2842-M10X1,25/05	SJ2842-M10X1.25	nut-washer M10*1.25	4
23	03.01.5787-M10X1.25X75/05	5787-M10X1.25X75	bolt-washer M10*1.25*75*18	4
24	02.D650.03.02.02	D650.03.02.02.00	left proppeller shaft	1
25	02.D650.03.02.03	D650.03.02.03.00	right propeller shaft	1
26	03.02.SJ2842-M12X1,5/05	SJ2842-M12X1.5	nut-washer M12*1.5	4
27	03.01.5787-M12X1.5X60/05	5787-M12*1.5*60*18	bolt-washer M12*1.5*60*18	4
28	02.D650.02.03.02	D650.02.03.02.00	rear shock absorber	2
29	02.D650.02.02.04	D650.02.02.04.00	RL lower suspension arm	1
30	03.02.SJ2842-M10X1,25/05	6177.1-M10*1.25	nut-washerM10*1.25	4
31	02.D650.02.01.0002	D650.02.01.00.02	suspension arm spacer	8
32	02.D650.02.01.0001	D650.02.01.00.01	suspension arm bush	16
33	03.01.5787-M10X1,25X75/05	5787-M10*1.25*75*18	bolt-washer M10*1.25*75*18	4
34	02.D650.02.02.02	D650.02.02.02.00	RR lower suspension	1
35	02.D650.02.02.01	D650.02.02.01.00	RR upper suspension	1
36				
37	02.D650.03.02.04H	D650.03.02.04.00H	(F938)wheel(25*11-12),BR	1
38	02.DLJ.BT-1045	BT-1045	outer boot seal	2

39	02.DLJ.MQC4-2303016	MQC4-2303016	steel cable baffle ring	2
40	02.DLJ.SH07680	SH07680	BIG band	4
41	02.DLJ.BT-1085	BT-1085	inner boot seal	2
42	02.DLJ.SH07350	SH07350	SMALL band	4
43	02.DLJPT SZW5004	PT SZW5004	end motion type inboard joint	2
44	02.DLJ.PT SZ-9001	PT SZ-9001	solid bar,left	1
45	02.DLJ.PT SZW1003	PT SZW1003	fixed enter type outboard joint	2
46	02.PT SZ-9002	PT SZ-9002	right solid bar	1

Radiator and air cleaner

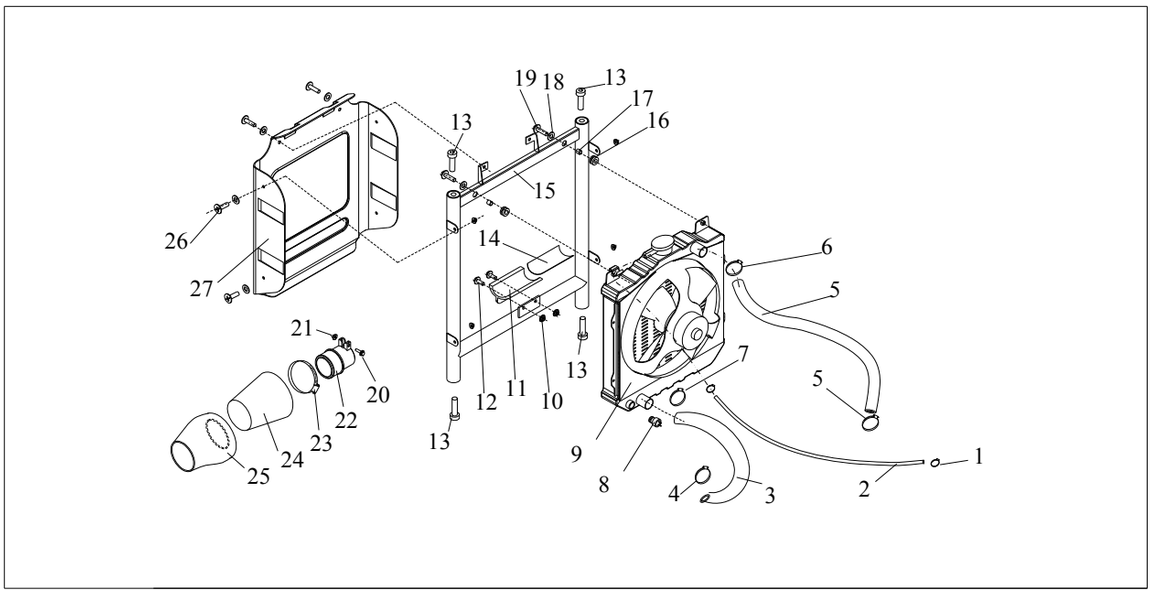

No.	ERP code	Code name	Description	Q'ty
1	02.D650.04.03.0004	D650.04.03.00.04	hoop (10-16)	2
2	02.D250.09004	D25009004	overflow bottle hose	1
3	02.D650.04.02.0001	D650.04.02.00.01	engine water outlet hose	1
4	02.D650.04.02.0003	D650.04.02.00.03	hoop(25-38),water tube	1
5	02.D650.04.02.0003	D650.04.02.00.03	hoop(25-38),water tube	1
6	02.D650.04.02.0002	D650.04.02.00.02	engine water inlet hose	1
7	02.D650.04.02.0003	D650.04.02.00.03	hoop(25-38),water tube	2
8	02.D800.04.02.02	D800.04.02.02.00	water temperature switch	1
9	02.D800.04.02.01	D800.04.02.01.00	radiator	1
10	03.02.6183,1-M6/05	6183.1-M6	self-locking nut M6	2
11	02.D800.01.02.0500	D800.01.02.05.00	radiator bracket	1
12	03.01.5787-M6X15/05	5787-M6x15	bolt washer M6*15	2
13	03.01.70.1-M12X1.5X30/05	70.1-M12x1.5x30	bolt hexagon M12*1.5*30	4

14	02.D650.04.02.0006	D650.04.02.00.06	radiator cushion	1
15	02.E650.01.02.05A	E650.01.02.05.00A	radiator mounting bar	1
16	02.JD.1910003	JD1910003	radiator rubber washer	2
17	02.JD.1910002	JD1910002	radiator spacer	2
18	03.03. 95-Φ6x13x1,5	95-Φ6x13x1.5	washer %%C6	2
19	03.01.5787-M6X25/05	5787-M6x25	bolt washer M6*25	2
20	03.01.5787-M6X40/05	5787-M6x40	bolt washer M6*40	1
21	03.02.6183,1-M6/05	6183.1-M6	self-locking nut M6	1
22	02.N650.04.05.02	N650.04.05.02.00	air cleaner bracket	1
23	02.N650.04.05.0001	N650.04.05.00.01	hoop (65-82) ,air cleaner	1
24	02.N650.04.05.01	N650.04.05.01.00	air cleaner	1
25	02.N650.04.05.03	N650.04.05.03.00	air cleaner jacket	1
26	03.01.D818-M6X35	D818-M6X35	bolt M6X35	4
27	02.D650.04.02.0005	D650.04.02.00.05	plastic cover of radiator	1

Electric appliance

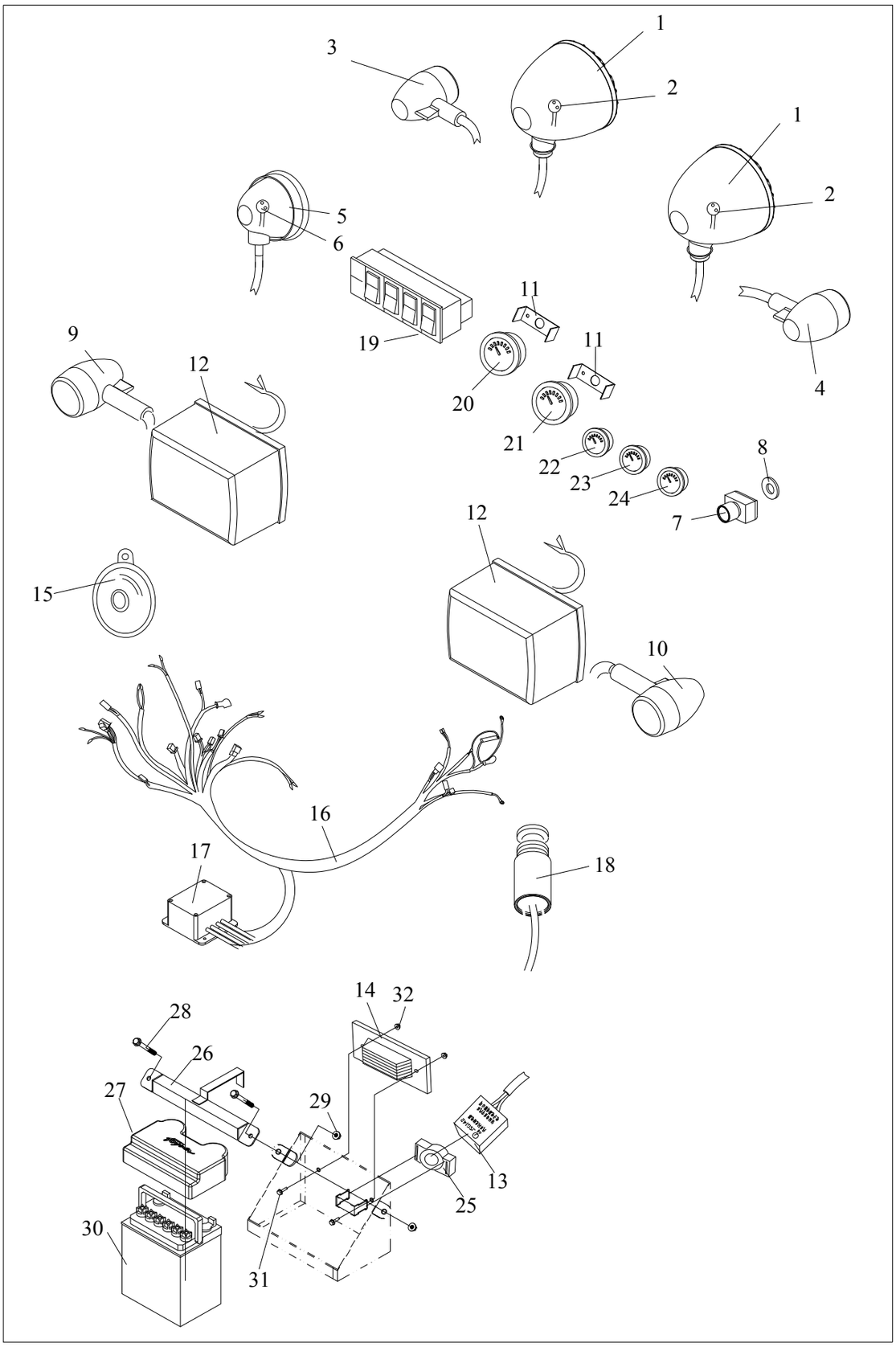

No.	ERP code	Code name	Description	Q'ty
1	02.D1600.06.11	D1600.06.11.00.00	headlight	2
2	02.D1600.06.11.0001	D1600.06.11.00.01	headlight bulb(35W/35W)	2
3	02.D650.06.00.05	D650.06.00.05.00	FL turning signal	1
4	02.D650.06.00.15	D650.06.00.15.00	FR turning signal	1
5	02.D1600.06.10	D1600.06.10.00.00	spot light	3
6	02.D1600.06.10.0001	D1600.06.10.00.01	spot light bulb(30W)	3
7	02.DS250.10.000005	DS250.10.00.00.05	horn button	1
8	02.JD.0460003	JD0460003	washer	1
9	02.D650.06.00.06	D650.06.00.06.00	RR turning signal	1
10	02.D650.06.00.16	D650.06.00.16.00	RL turning signal	1
11	02.D1600.01.02.0006	D1600.01.02.00.06	Bracket of speedometer	2
12	02.D650.06.00.04	D650.06.00.04.00	tail light	2
13	02.D250.07914A	D25007914A	flasher apparatus	1
14	02.D650.06.00.11A	D650.06.00.11.00A	regulator	1
15	02.D650.06.00.09	D650.06.00.09.00	horn	1
16	02.D650.06.00.01B	D650.06.00.01.00B	harness	1
17	02.D650.06.00.01.01	D650.06.00.01.01	relay box	1
18	02.N650.06.06	N650.06.06.00.00	speed sensor	1
19	02.D1600.06.03	D1600.06.03.00.00	four switch assy	
20	02.N650.06.02A	N650.06.02.00.00A	speedometer	1
21	02.N650.06.03	N650.06.03.00.00	tachometer	1
22	02.N650.06.05	N650.06.05.00.00	coolant temperature indicator	1
23	02.D1600.06.09	D1600.06.09.00.00	voltmeter	1
24	02.N650.06.04	N650.06.04.00.00	fuel level gauge	1
25	02.D250.07924	D25007924	flasher coat	1
26	02.D800.01.02.06	D800.01.02.06.00	battery bracket	1
27	02.D650.08.01.0011	D650.08.01.00.11	battery cover	1
28	03.02.6183.1-M8/05	6183.1-M8	nut-washer M8	2
29	03.01.5787-M8X140/05	5787-M8X140	bolt-washer M8*140	2
30	02.D650.08.01.0001	D650.08.01.00.01	battery(36Ah)	1
31	D818-M6X16	818-M6X16	Cross head screw M6*16	2
32	03.02.6183,1-M6/05	6183.1-M6	Self-locking nut M6	2

Seat and safety belt

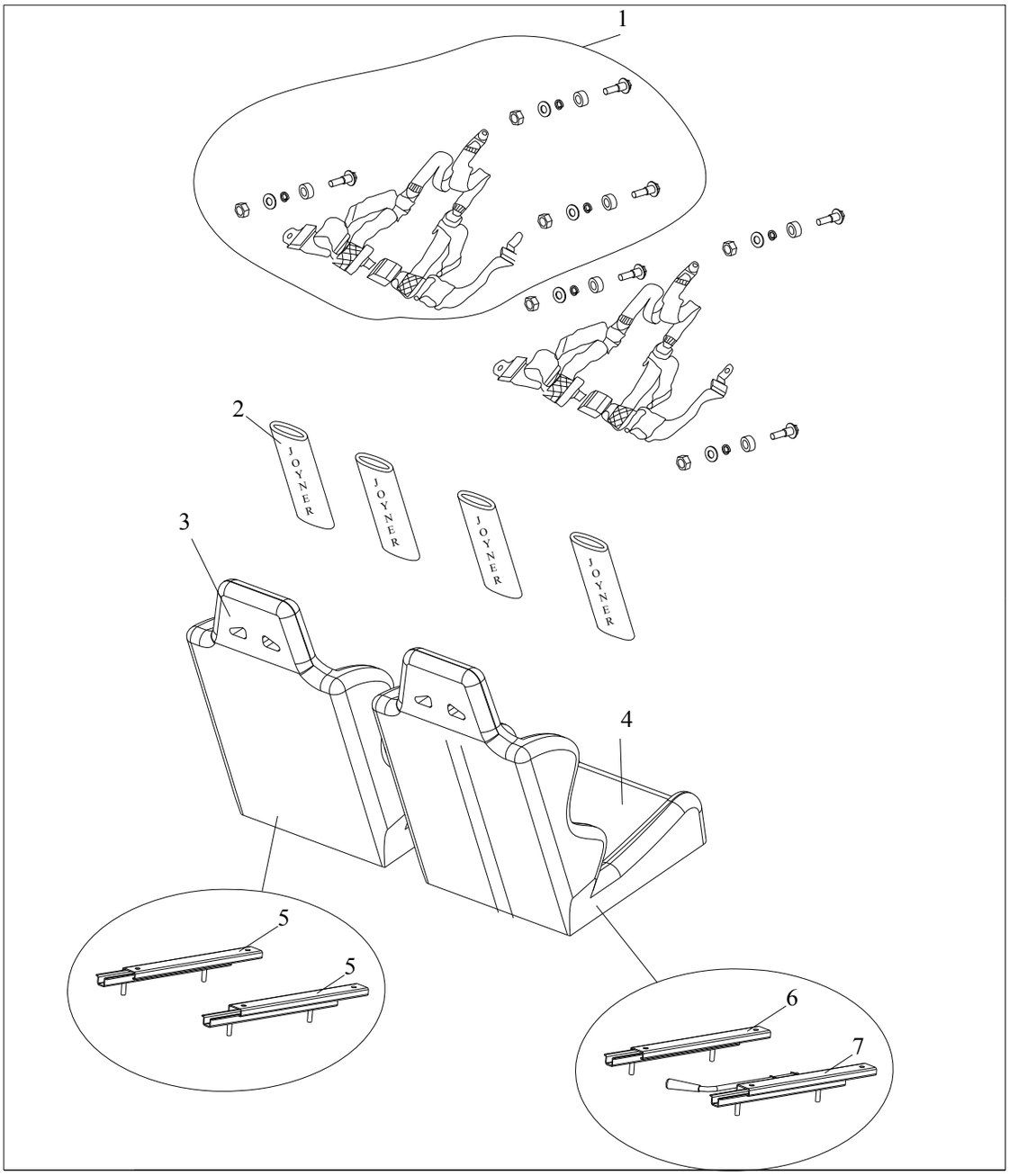

No.	ERP code	Code name	Description	Q'ty
1	02.D650.08.01.0001A	D650.08.01.00.01A	safty belt	2
2	02.D650.08.01.0013	D650.08.01.00.13	safty belt tube	4
3	02.D650.08.01.03	D650.08.01.03.00	left seat	1
4	02.D650.08.01.04	D650.08.01.04.00	right seat	1
5	02.D650.08.01.03.01	D650.08.01.03.01	Track without release lever	2
6	02.D650.08.01.03.01	D650.08.01.03.01	Track without release lever	1
7	02.D650.08.01.03.02	D650.08.01.03.02	Track with release lever	1

Other parts

NO	ERP Code	Part No.	Part Description	Qty
1	02.D650.08.05.0008	D650.08.05.00.08	spark plug wrench	1
2	02.DLJ.270Q-23800	270Q-23800	spark plug	2
3	02.DLJ.270Q-40002	270Q-40002	Oil Filter wrench	1

Front rack option

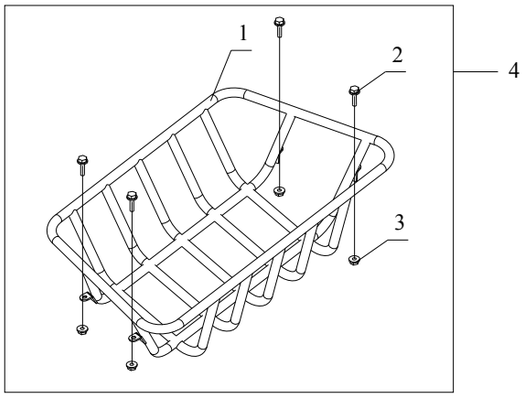

No.	ERP code	Code name	Description	Q'ty
1	02.D650.01.02.10	D650.01.02.10.00	front rack	1
2	03.01.5787-M8X25/05	5787-M8X25	bolt-washer M8X25	4
3	03.02.6183,1-M8/05	6183,1-M8	nut M8	4
4	02.D650.10.0800	D650.10.08.00.00	front rack OPTION	1set

Rear rack option

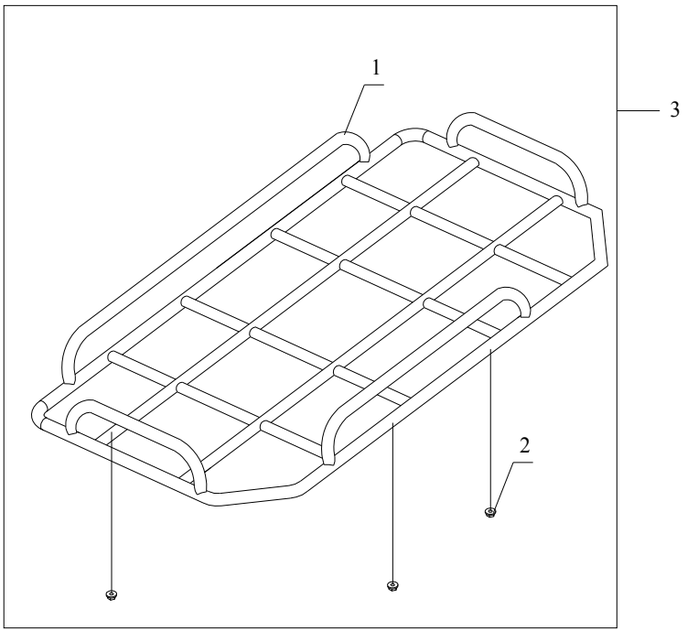

No.	Code name	Code name	Description	Q'ty
1	02.D650.08.01.01B	D650.08.01.01.00B	rear rack	1
2	03.02.2842-M8/05	2842-M8	nut M8	4
3	02.D650.10.0900	D650.10.09.00.00	rear rack OPTION	1set

Paddock roof rack option

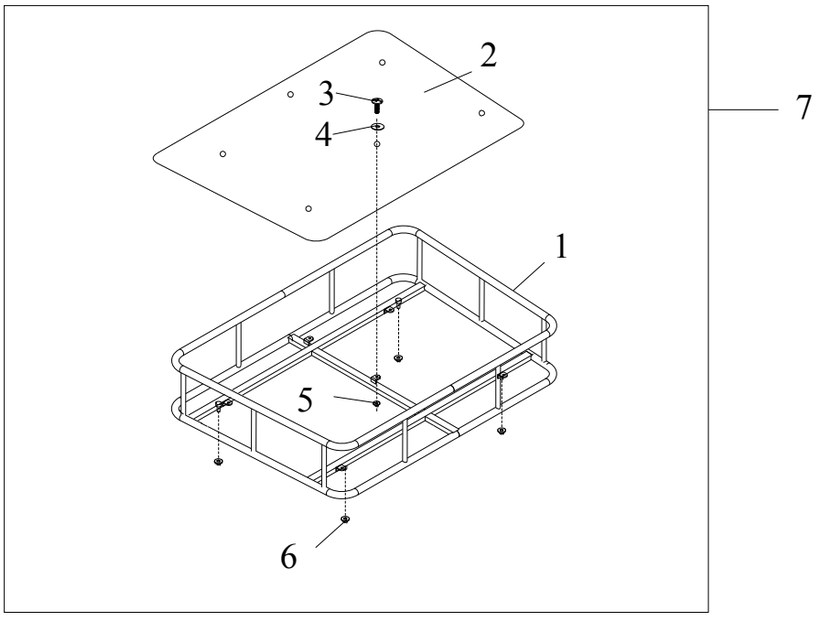

No.	ERP code	Code name	Description	Q'ty
1	02.D650.01.02.13	D650.01.02.13.00	paddock roof rack	1
2	02.D650.01.02.15	D650.01.02.15.00	paddock roof rack plate1.A1	1
3	03.01.D818-M6X35	D818-M6X35	bolt M6x35	5
4	02.JD.0900008	JD.0900008	washer	5
5	03.02.6183,1-M6/05	6183,1-M6/05	nut M6	5
6	03.02.2842-M10x1.5/05	2842-M10x1.5/05	nut M10x1.5	4
7	02.D650.10.11	D650.10.11.00.00	Paddock roof rack option	1

Rifle roof rack option

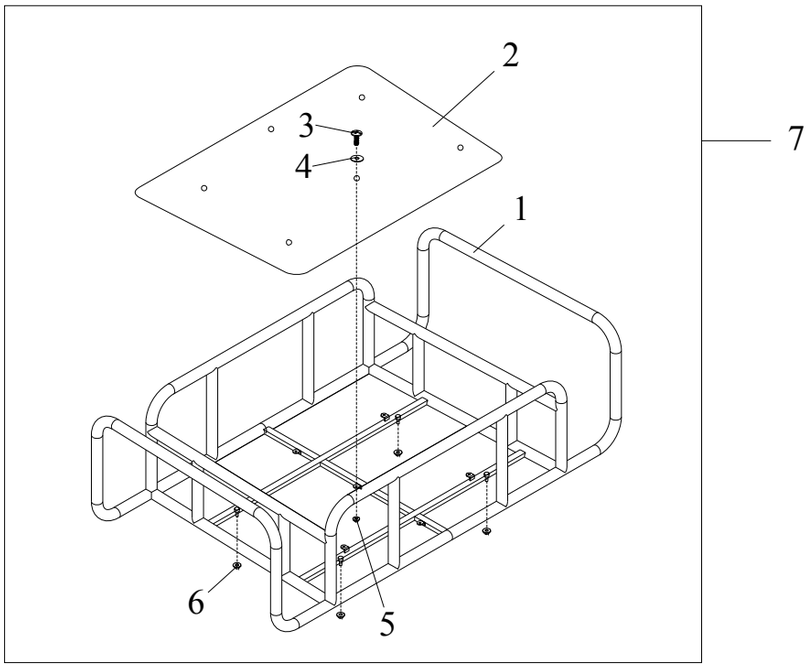

No.	ERP code	Code name	Description	Q'ty
1	02.D650.01.02.12	D650.01.02.12.00	rifle roof rack	1
2	02.D650.01.02.16	D650.01.02.16.00	rifle roof rack plate2.A1	1
3	03.01.D818-M6X35	03.01.D818-M6X35	bolt M6x35	5
4	02.JD.0900008	02.JD.0900008	washer	5
5	03.02.6183,1-M6/05	03.02.6183,1-M6/05	nut M6	5
6	03.02.2842-M10x1.5/05	03.02.2842-M10x1.5/05	nut M10x1.5	4
7	02.D650.10.10	D650.10.10.00.00	Rifle roof rack option	1

Nerf roof rack option

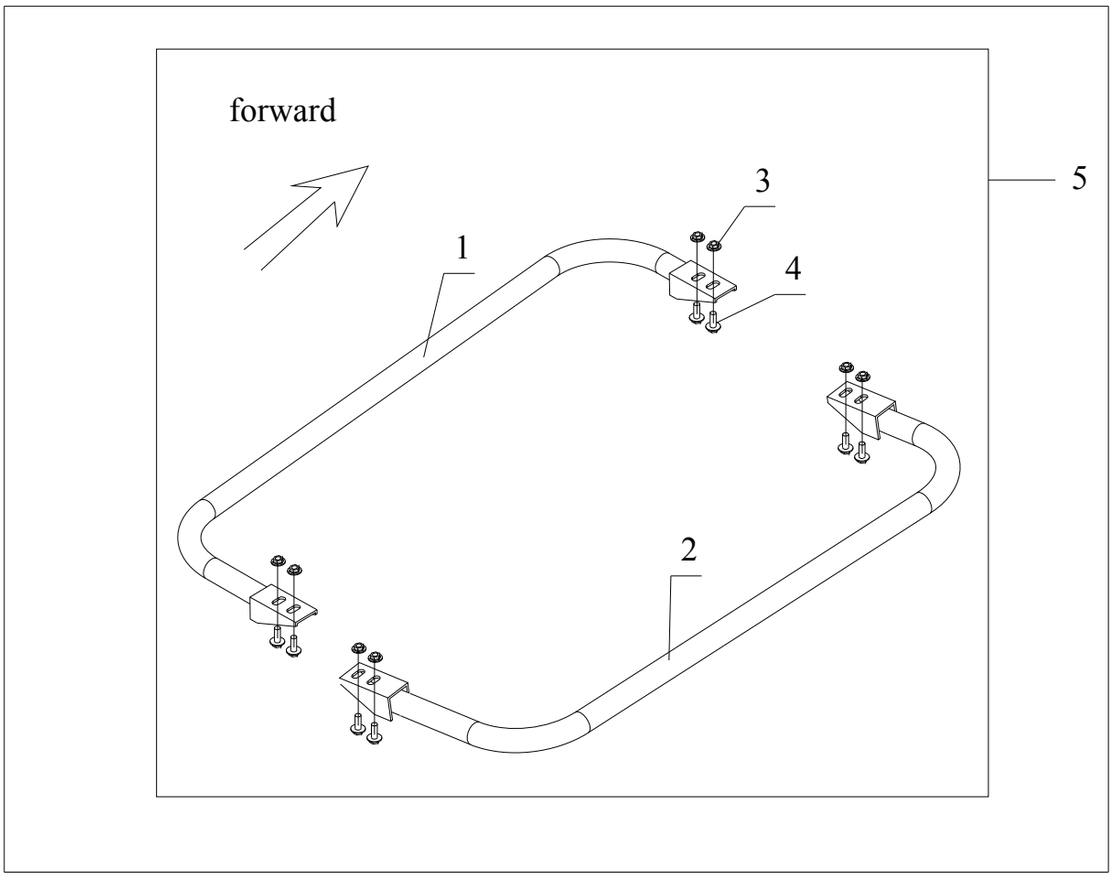

No.	ERP code	Code name	Description	Q'ty
1	02.SV1100.9999.02	SV1100.99.99.02.00	left nerf bar	1
2	02.SV1100.9999.03	SV1100.99.99.03.00	right nerf bar	1
3	03.01.5787-M10X35 /05	5787-M10X35	bolt-washer M10X35	8
4	03.02.SJ2842-M10/05	SJ2842-M10	nut M10	8
5	02.D650.10.06	D650.10.06.00.00	Nerf roof rack option	1

3000B winch option

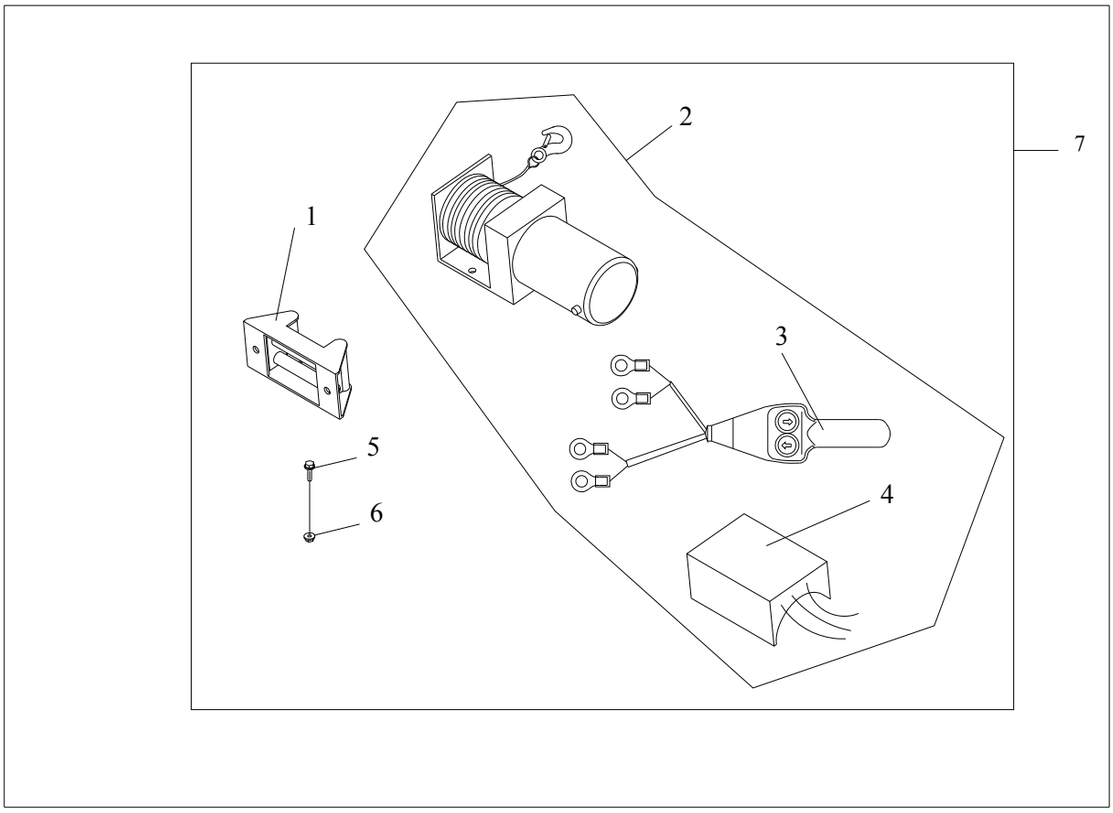

No.	ERP code	Code name	Description	Q'ty
1	02.D650.08.01.06	D650.08.01.06.00	wire calbe guide	1
2	02.D650.08.01.05A	D650.08.01.05.00A	3000B electrical winch	1
3	02.D650.08.01.05.01	D650.08.01.05.01	electrical winch switch	1
4	02.D650.08.01.0502	D650.08.01.05.02	electrical control case	1
5	03.01.5787-M8X25/05	5787-M8X25	bolt-washer M8X25	4
6	03.02.6183,1-M8/05	6183,1-M8	nut M8	4
7	02.D650.10.12	D650.10.12.00.00	3000B winch option	1

Spotlight option

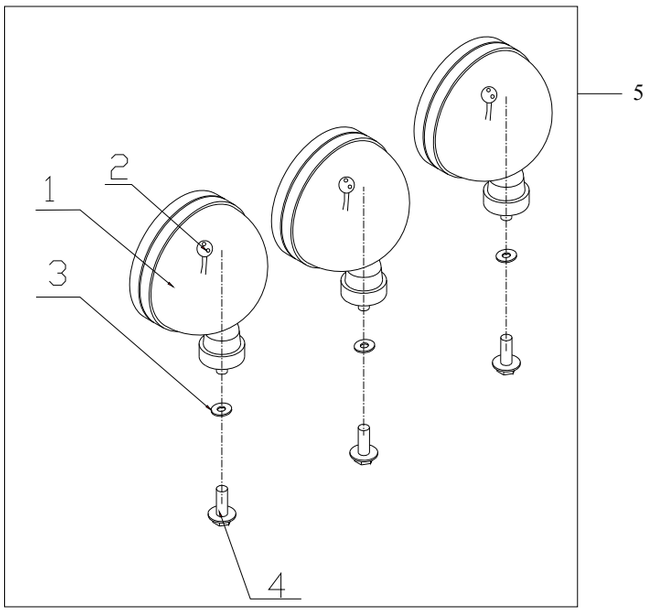

No.	ERP Code	Code name	Description	Q'ty
1	02.D1600.06.10A	D1600.06.10.00.00A	spotlight	3
2	02.D1600.06.10.0002	02.D1600.06.10.0002	spotlight bulb	3
3	03.03.95-Φ 10X20X1,5/05	95-Φ10X20X1,5	washer-Φ 10X20X1,5	3
4	03.01.5787-M10*20/05	5787-M10*20	bolt-washer M10*20	3
5	02.D650.10.02	D650.10.02.00.00	Spotlight option	1

Tow ball option

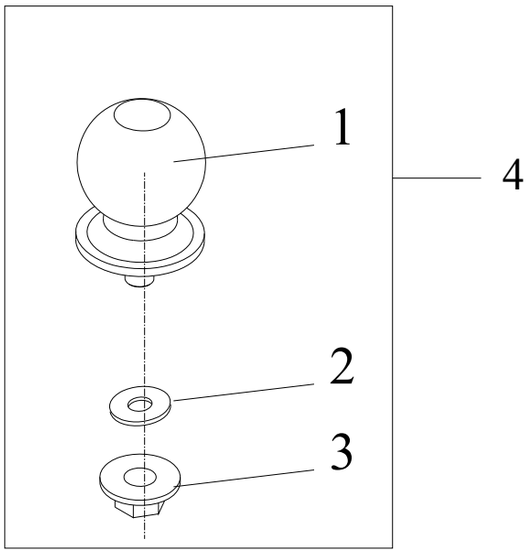

No.	ERP Code	Code name	Description	Q'ty
1	02.JD.1500004	JD1500004	TOW BALL Φ50	1
2	03.04.93-Φ18/05	93-Φ18	spring washer Φ 18	1
3	03.02.SJ2842-M18/05	SJ2842-M18	nut M18	1
4	02.D650.10.04	D650.10.04.00.00	Tow ball option	1

safty belt tube option

NO	ERP Code	Part No.	Part Description	Qty
1	02.D650.08.01.0013	D650.08.01.00.13	safty belt tube	2

Shock absorber coat option

NO	ERP Code	Part No.	Part Description	Qty
1	02. D650.08.01.07.01	D650.08.01.07.01	Front shock absorber coat	2
2	02. D650.08.01.07.02	D650.08.01.07.02	Rear shock absorber coat	2

Tools and bag kit option

12

NO.	ERP Code	Part No.	Part Description	Qty
1	02.D650.08.05.0001	D650.08.05.00.01	Open-jawed spanner 8~10	1
2	02.D650.08.05.0002	D650.08.05.00.02	Open-jawed spanner 12~14	1
3	02.D650.08.05.0003	D650.08.05.00.03	Open-jawed spanner 13~16	1
4	02.D650.08.05.0004	D650.08.05.00.04	Open-jawed spanner 17~19	1
5	02.JD.1400004	JD1400004	Thread-locking anaerobic adhesive	1
6	02.D650.08.05.0006	D650.08.05.00.06	“—”Screwdriver	1
7	02.D650.08.05.0007	D650.08.05.00.07	“+” Screwdriver	1
8				
9	02.D650.08.05.0005	D650.08.05.00.05	Long Nose Pliers	1
10	02.D650.08.01.13	D650.08.01.13.00	Tools bag	1
11	02.D650.08.06.0001	D650.08.06.00.01	Cable tie	1
12	02. D650.10.04	D650.10.04.00.00	Tools and bag kit option	1set

Envelopment and foam cover option

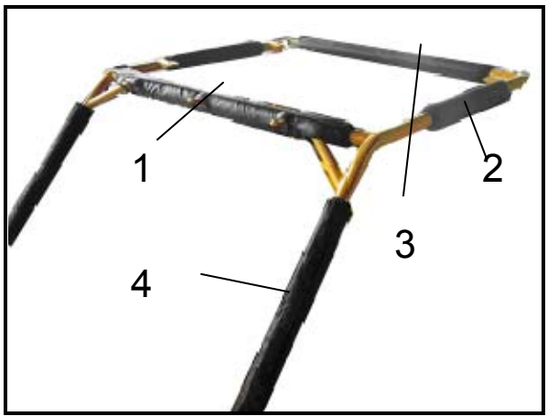

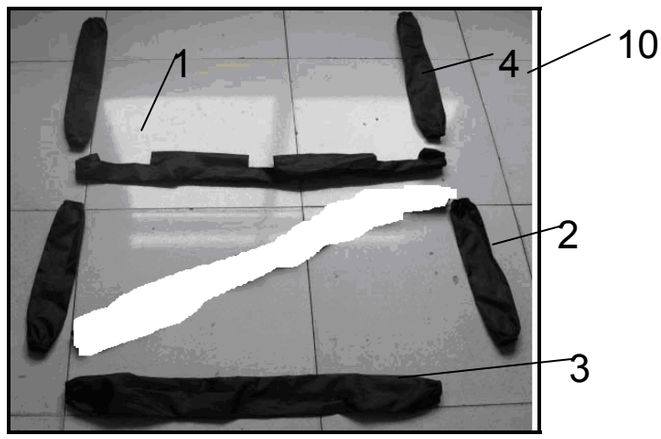

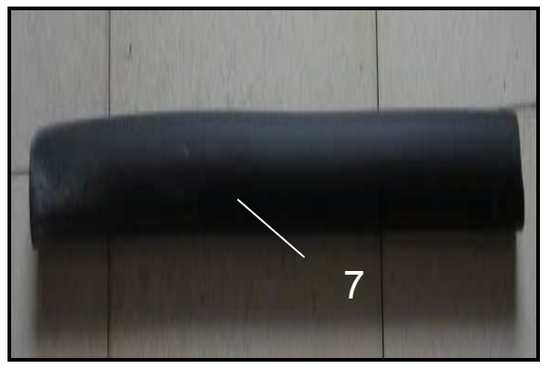

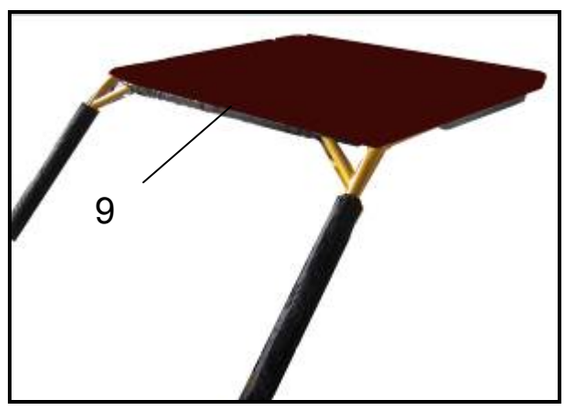

NO.	ERP Code	Part No.	Part Description	Qty
1	02. D650.08.01.02.01	D650.08.01.02.01	Protect-jacket front, upper	1
2	02. D650.08.01.02.02	D650.08.01.02.02	Protect-jacket side,upper	2
3	02. D650.08.01.02.03	D650.08.01.02.03	Protect-jacket rear,upper	1
4	02. D650.08.01.02.04	D650.08.01.02.04	Protect-jacket side,front	2
5	02. D650.08.01.02.06	D650.08.01.02.06	Protect-jacket side,rear	2
6	02. D650.08.01.02.07	D650.08.01.02.07	Small Protect-jacket side,rear	2
7	02. D250.11770	D250.11770	foam cover	4
8	02.D650.08.01.0010	D650.08.01.00.10	Entire vehicle cover	1
9	02. D650.08.01.0005	D650.08.01.00.05	canvas roof	1
10	02. D650.08.01.0800	D650.08.01.08.00	Protect-jacket assy	1SET

Preparation attach instruction

Remove packing

Remove Packing

1.Remove Packing.
2.Unbolt both sides and top of crate,carefully remove,cut wire ties holding cart lift cart and slide remaining frame out from under.

Install the front suspension arm

Install the front suspension arm

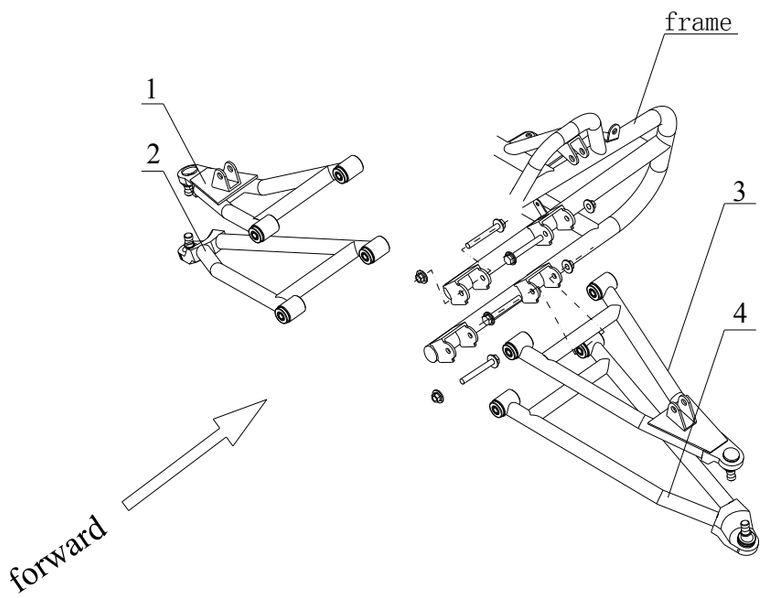

4	02.D650.02.01.02	D650.02.01.02.00	FR lower suspension arm	1
3	02.D650.02.01.01	D650.02.01.01.00	FR upper suspension arm	1
2	02.D650.02.01.04	D650.02.01.04.00	FL lower suspension arm	1
1	02.D650.02.01.03	D650.02.01.03.00	FL upper suspension arm	1
	Erp code	code name	Description	Q'ty

1. Install the left upper suspension arm ,F-1,
   the left lower suspension arm ,F-2 on the front of frame as the figure above.
2. Install the right suspension arms as above .
   Note: Before installing, check the grease in the moving parts,
   put 3# Lithium-grease into the moving part if necessary.
3. Jesus Tighten the bolts and nuts with thread glue.)

front shock absorber, stub axle

Attach front shock absorber,stub axle

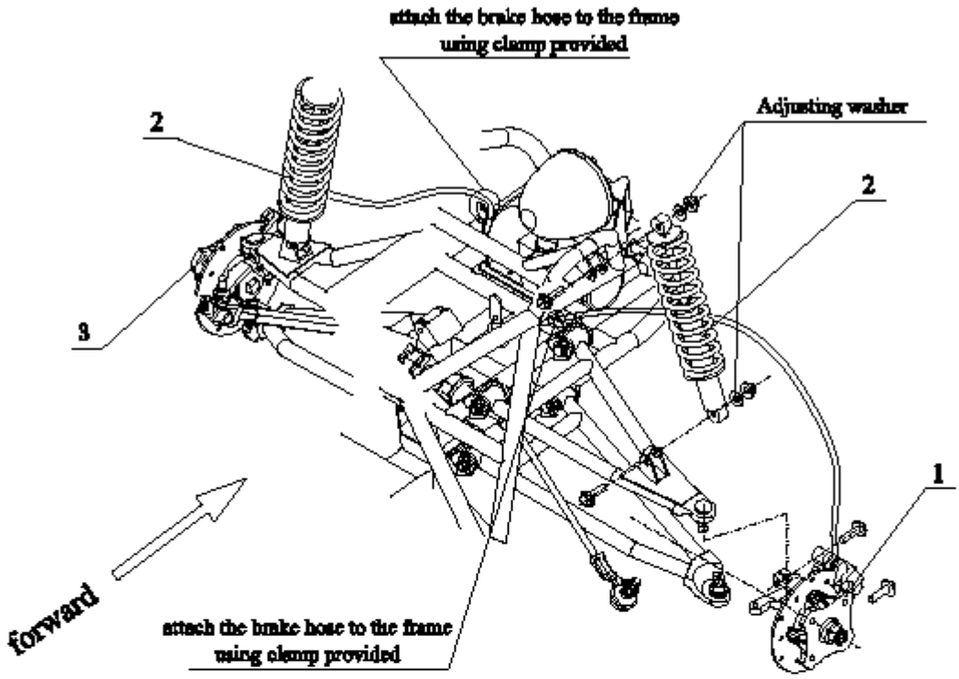

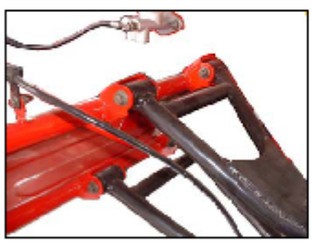

3	02.D650.03.01.0002	D650.03.01.00.02	left stub axle	1
2	02.D650.02.03.01	D650.02.03.01.00	front shock absorber	2
1	02.D650.03.01.0002	D650.03.01.00.02	right stub axle	1
	No.	No.	Description	Q' ty

1. Attach stub axle,L-1 onto the right suspension arm with bolt as figure above, tighten the bolts with thread glue.
2. Attach front shock absorber -2 on the frame and upper suspension arm-FR, tighten the bolt and nuts with thread glue.
3 Attach left front shock absorber-2 and stub axle,L -3 as described above.

Attach

Attach tie rod and front whees

Attach tie rod end and front wheel

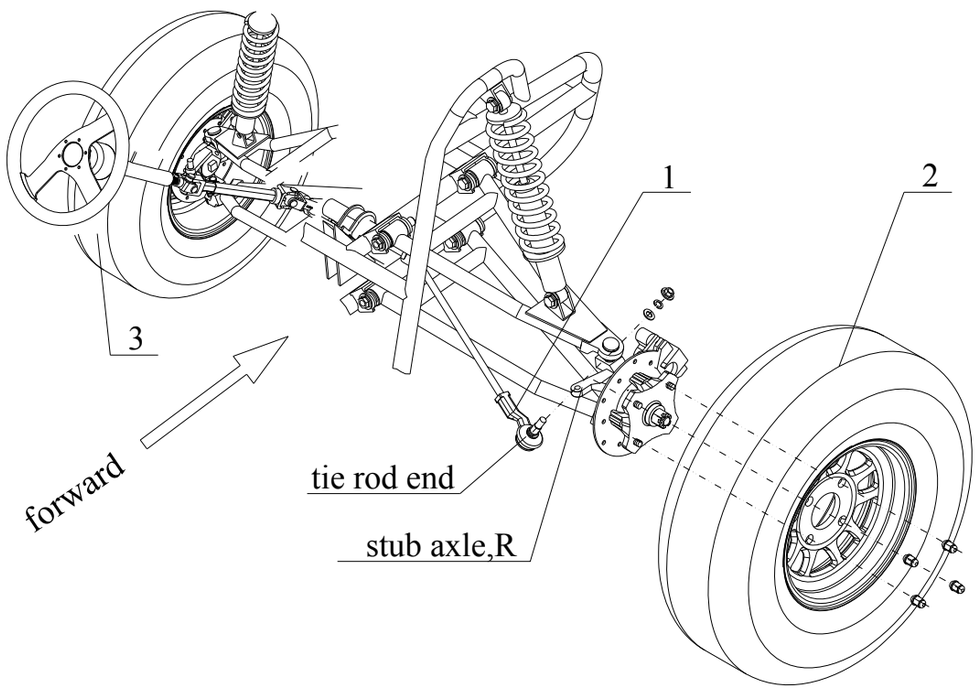

3	02.S650.03.01.01A	S650.03.01.01.00A	left wheel(27*8-12)	1
2	02.S650.03.01.04A	S650.03.01.04.00A	right wheel(27*8-12)	1
1	02.D650.05.01.03	D650.05.01.03.00	tie rod end	1
No.	Erp code	code name	Description	Q'ty

1. Install the shaft of outer tie rod end-1 to stub axle,R
   from the underside (nut on top).
2. Install flat washer,spring washer then tighen nut.
   Note: don't adjust outer tie rod end as wheel alignment is done before packing.
3. Attach the wheel(27*8-12),FR-2 on the hub, tighten the nuts.
4. Attach the wheel(27*8-12),FL-3 as described above .

Attach tie rod and front wheel

Attach the rear suspension arm

Attach the rear suspension arm

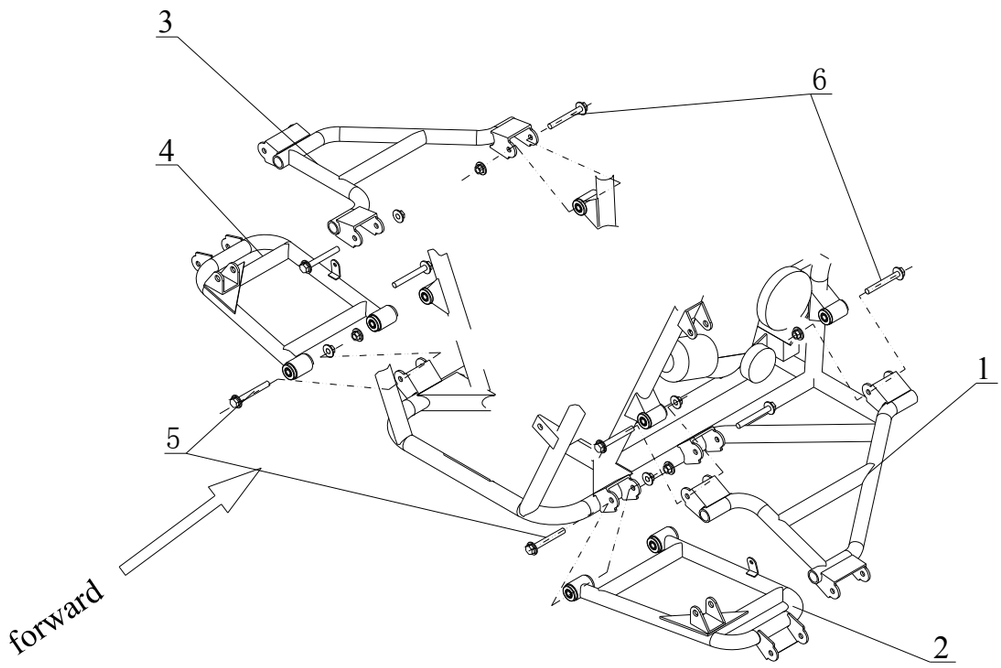

4	02.D650.02.02.04	D650.02.02.04.00	BL lower suspension arm	1
3	02.D650.02.02.03	D650.02.02.03.00	BL upper suspension arm	1
2	02.D650.02.02.02	D650.02.02.02.00	BR lower suspension arm	1
1	02.D650.02.02.01	D650.02.02.01.00	BR upper suspension arm	1
	Erp code	code name	Description	Q’ty

1. Attach upper suspension arm,BR -1 on the rear part of frame.
   Insert the bolt-6. Tighten the bolts and nuts with threads glue.
2. Attach lower suspension arm,BR -2 on the rear part of frame.
   Insert the bolt-5. Tighten the bolts and nuts with thread glue.
   Note; apply 3# Lithium-grease to the move part of arm if necessary.
3. Attach lower/upper suspension arm,LB as described above .

Attach propeller shaft and shaft carrier

Attach propeller shaft and shaft carrier

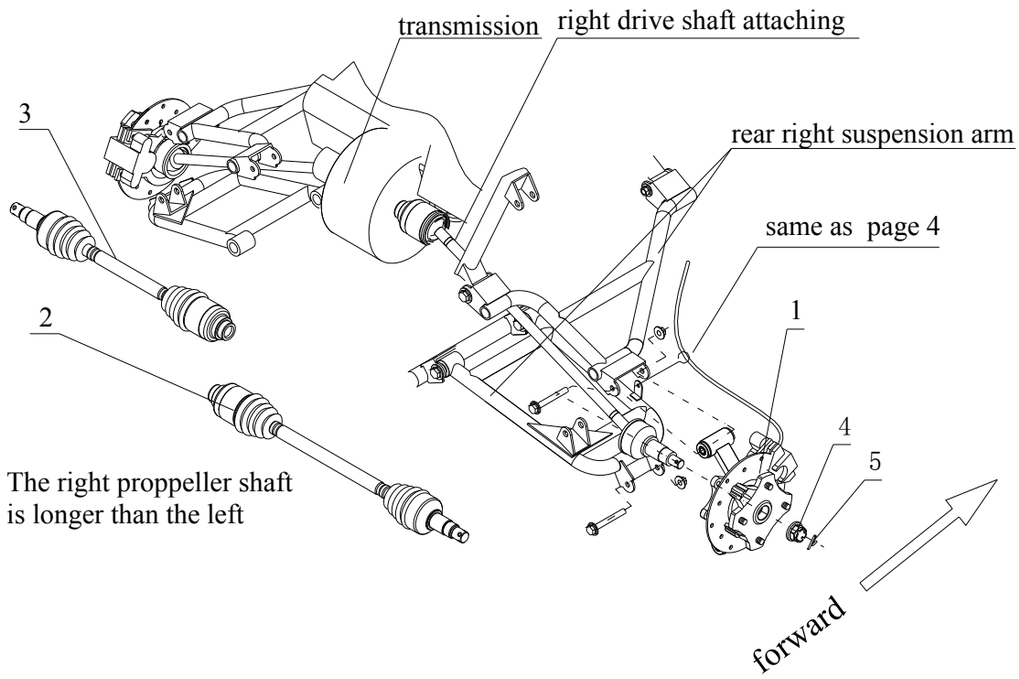

3	02.D650.03.02.02	D650.03.02.02.00	left proppeller shaft	1
2	02.D650.03.02.03	D650.03.02.03.00	right proppeller shaft	1
1	02.D650.03.02.0001	D650.03.02.00.01	shaft carrier	2
	Erp code	code name	Description	Q'ty

1.Check the clip on the output shaft of transmission, confirm the clip is in the groove on the output shaft of transmission.
2. Insert right proppeller shaft-2 onto the output shaft of transmission, confim the clip on the output shaft clip in the groove .
3. Put 3# Lithium-grease on the seal area if necessary.
4. Insert other end of right proppeller shaft-2 into shaft carrier-1.
5. Insert bolt into the hole of hub and upper arm. Tighten the bolt and nut with thread glue.
6. Attach lower arm to the hub as above.
7. Tighten the nut-4 with thread glue.
8. Insert pin into the lock-hole on the proppeller shaft, and lock the pin-5.
9. Attach the brake hose to the lower suspension arm with clamp provided.
10. Attach the left side as figure .

Attach propeller shaft and shaft carrier

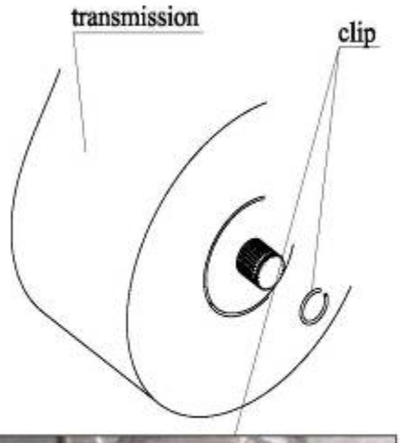

1. Caution: the clip must be confirmed in the groove before attaching drive shaft

Attach rear shock absorber and rear wheel

Attach rear shock absorber and rear wheel

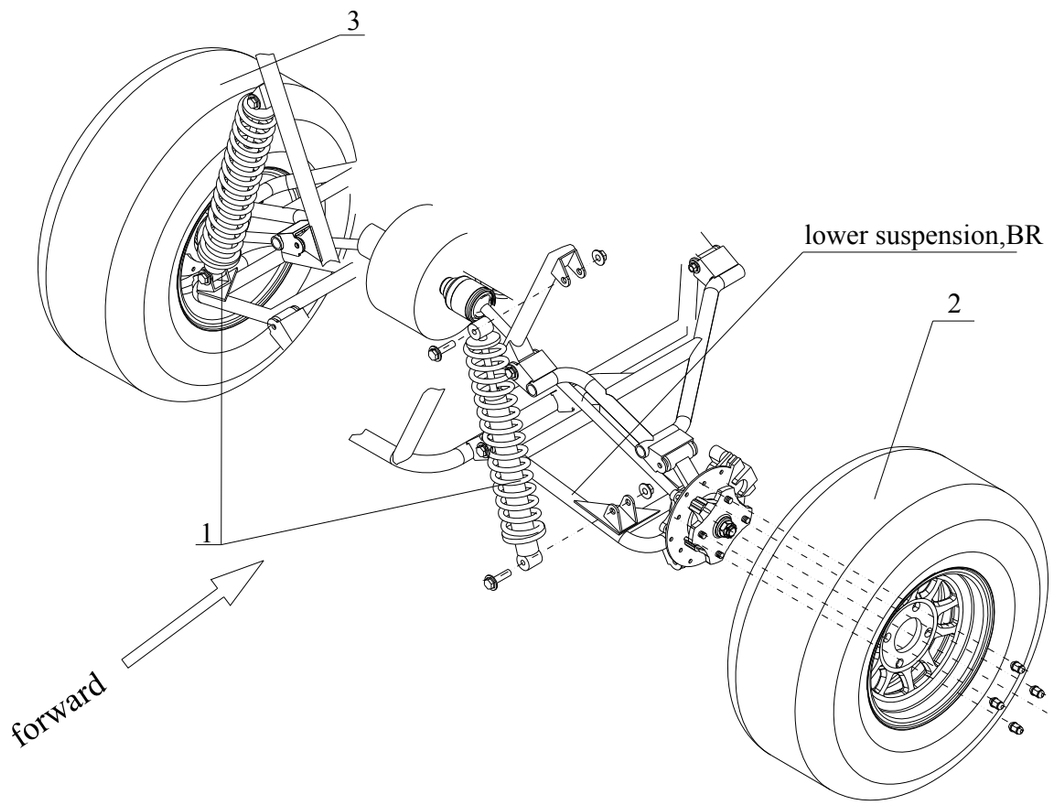

3	02.S650.03.02.01A	S650.03.02.01.00A	wheel (27X11-12),BL	1
2	02.S650.03.02.04A	S650.03.02.04.00A	wheel(27*11-12),BR	1
1	02.D650.02.03.02	D650.02.03.02.00	rear shock absorber	2
No.	Erp code	code name	Description	Q'ty

1. Attach rear shock absorber-1 on the frame and lower suspension,BR.
2. Insert bolt into the hole of shock and lower suspension,BR.
   Tighten the bolt and nut with thread glue.
3. Attach wheel (27X11-12),BR-2 on the hub. tighten the nuts.
4. Attach the left side as above .

Attach rear shock absorber and rear wheel

Attach rear shock absorber and rear wheel

Attach rear bumper bar

Attach rear bumper bar

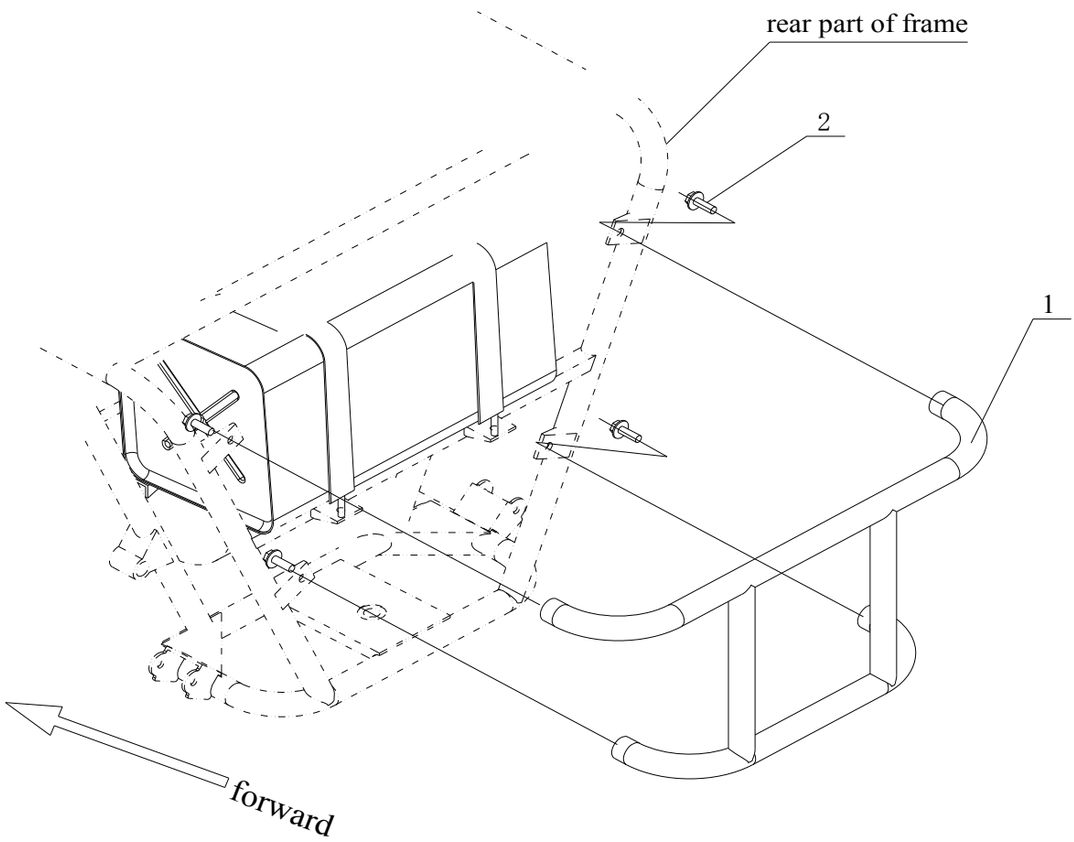

2	03.01.5787-M12X1,5X30/05	5787-M12X1.5X30	bolt M12*1.5*30	4
1	02.D650.01.02.06	D650.01.02.06.00	rear bumper bar	1
No.	Erp code	code name	Description	Q'ty

1. Attach the rear bumper bar-1 as figure.
2. Tighten four bolts-2 with thread glue.

Attach roll bar

Attach roll bar

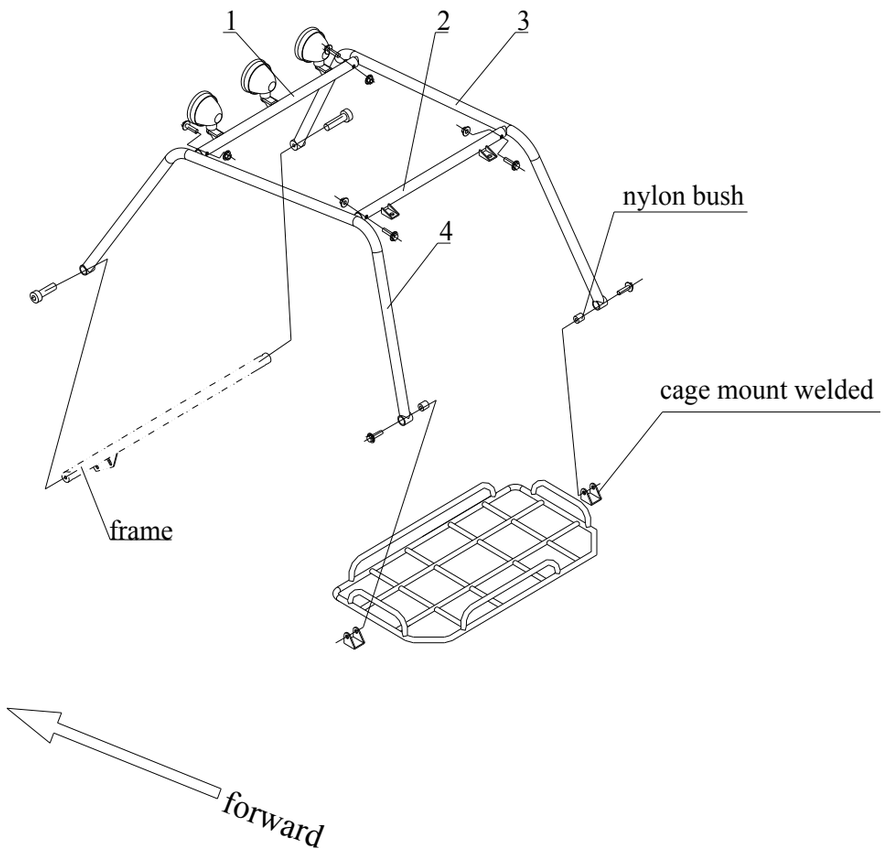

4	02.D650.01.02.01B	D650.01.02.01.00B	left roll bar	1
3	02.D650.01.02.02B	D650.01.02.02.00B	right roll bar	1
2	02.D650.01.02.04	D650.01.02.04.00	rear cross bar	1
1	02.D650.01.02.03	D650.01.02.03.00	front cross bar	1
	Erp code	code name	Description	Q'ty

1. Attach roll bar as above figure. insert bolts.
2. Tighten all bolts after fixing all roll bar.
   Caution: all bolts insert from outer of vehicle to inner.

Attach radiator and cover

Attach radiator and cover

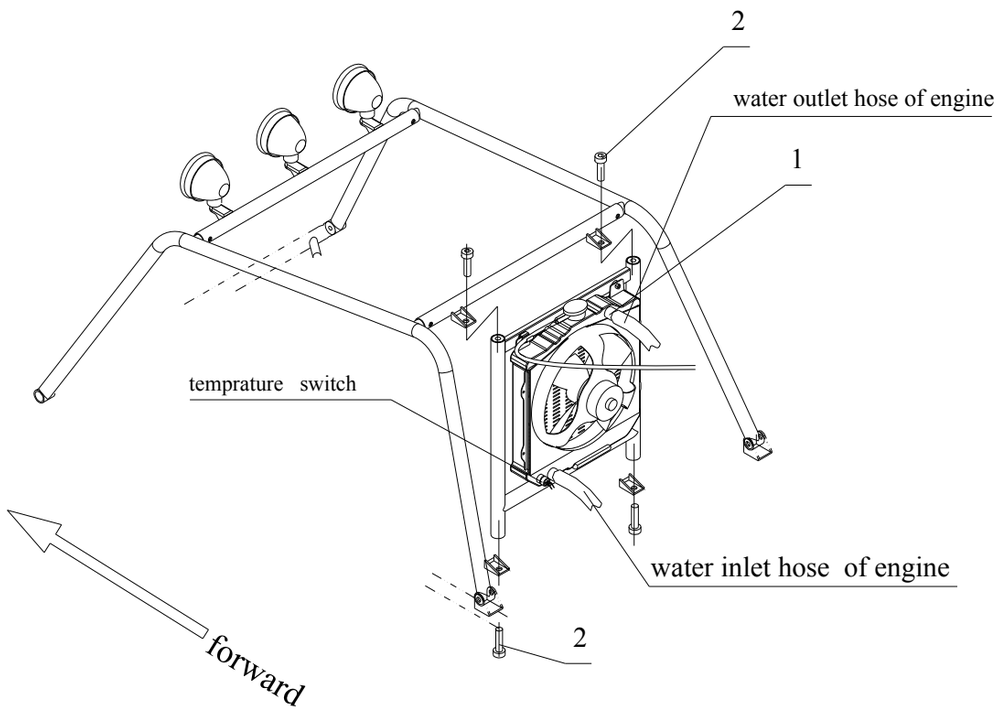

2	03.01.5787-M12X1,5X30/05	GB/T5787-1986	bolt M12*1.5*30	4
1	02.D800.04.02.01	D800.04.02.01.00	radiator	1
	Erp code	code name	Description	Q'ty

1. Attach the radiator as above figure, tighten all bolts
   Note: check all electrical plug connections are good.

Attach muffler

Attach the muffler

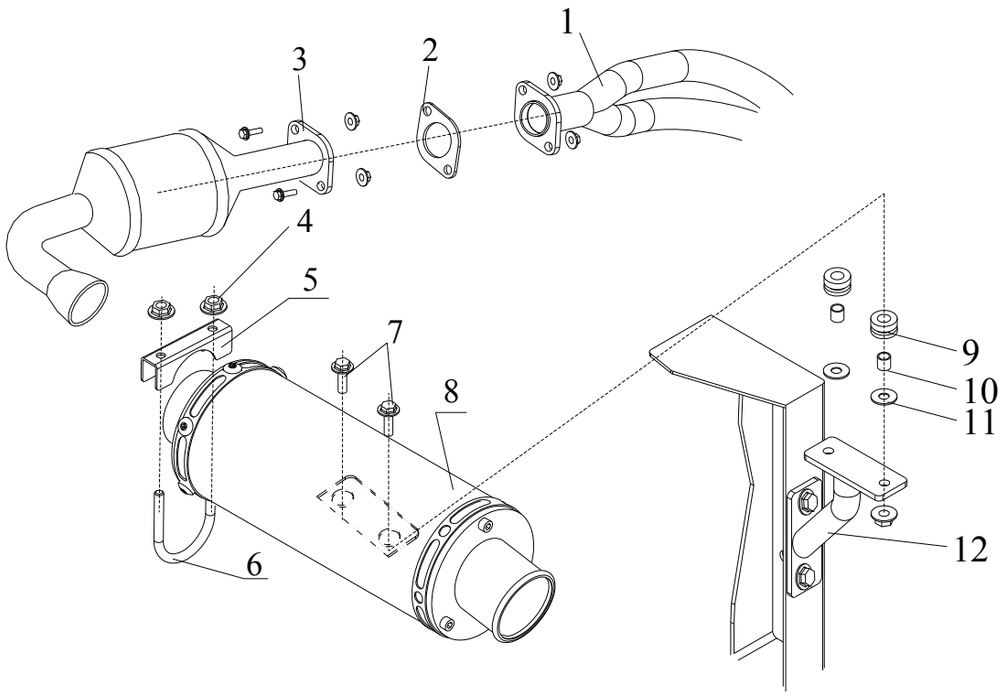

12	02.D650.04.04.03	D650.04.04.03.00	muffer bracket	1
11	96 -Φ8x24x2/05	GB/T96 big	washer φ8（ φ8.4*φ24*2）	2
10	02.JD.1910002	JD1910002	spacer	2
9	02.JD.1910002A	JD1910002A	muffler rubber cover	2
8	02.D650.04.04.01B	D650.04.04.01.00B	long muffler	1
7	03.01.5787-M8X30/05	GB/T5787-1986	bolt-washer M8*30	2
6	02.D650.04.04.0008-2	D650.04.04.00.08-2	U clamp screw rod	1
5	02.D650.04.04.0008-1	D650.04.04.00.08-1	U clamp mount	1
4	03.02.6183,1-M8/05	GB/T6177.1-2000	self-locking nut	2
3	02.D650.04.04.04	D650.04.04.04.00	catalac convertor	1
2	02.D650.04.04.0009	D650.04.04.00.09	cushion flange	1
1	02.D650.04.04.02	D650.04.04.02.00	front exhaust pipe	1
	Erp code	code name	Description	Q’ty

1. Attach catalyst package-3 to front exhaust pipe -1,
   before that you should inset a carbon bush -2 between them.
2. Fix muffler-8 to the bracket -12 ,
   and attach the rubber cover-9、spacer-10、washer -11 in turn.
3. tighten all bolt and nut unquestionably.

Attach seats and safety belt

Attach seats and safety belt

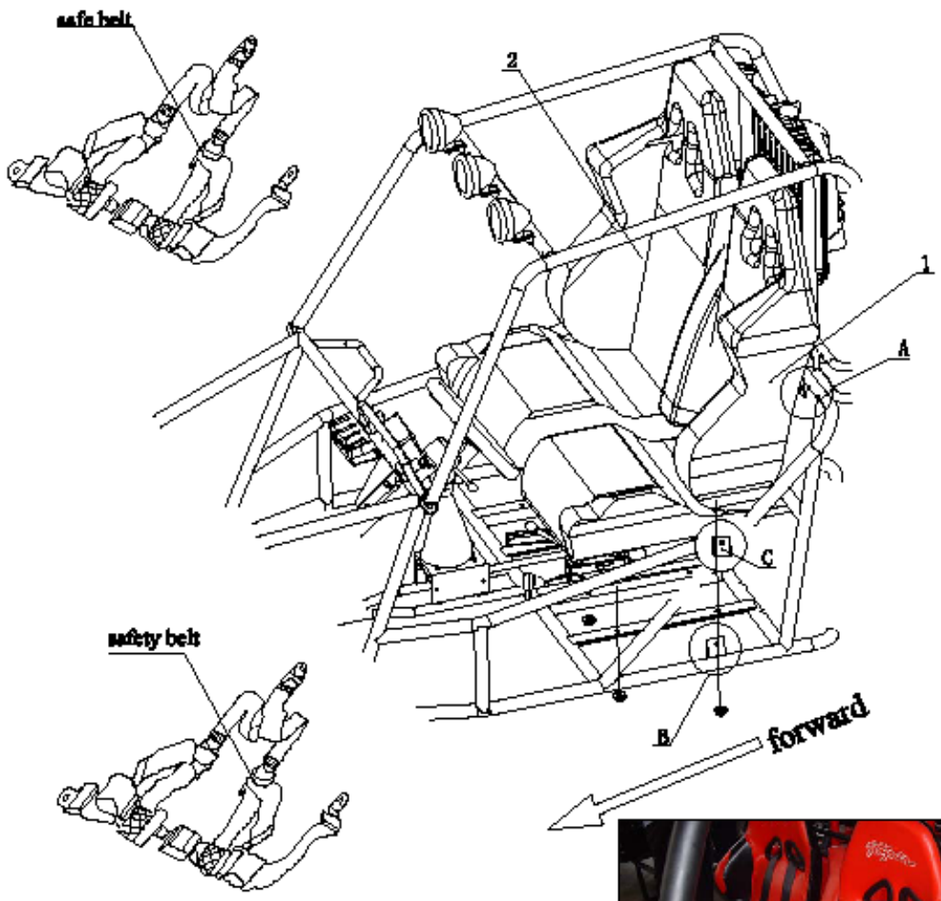

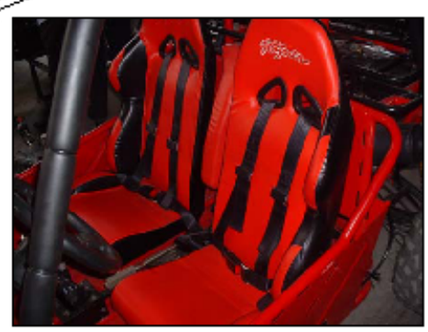

2	02.D650.08.01.04	D650.08.01.04.00	right seat	1
1	02.D650.08.01.03	D650.08.01.03.00	left seat	1
	Erp code	code name	Description	Q' ty

1. Attach safety belt from A, B, C as above.
2. Attach seat-1, seat-2 as above.
3. tighten all bolts and nuts.

check vehical

Check vehicle

1. Before starting the engine check engine oil,gearbox oil and all plugs have good connection.
   check the level of coolant at the filler neck of inlet to radiator
   after leaving the cap off at this stage.
   check pressure in the tire; front tire: 0.1MP; rear tire: 0.1MP
   check all bolts and nuts are tight.
2. start engine,make sure oil warning light goes out within 5-10 seconds
   run engine untile both radiator hoses are warm (about 5 minutes ,< 80 degree).
   keeping watch coolant level at radiator filler neck, top up as it drops.
   install radiator cap and test drive gently for 2-3 minutes
   allow engine to cool,top up coolant in radiator ,refit cap.

WARNING:

when the enige is at high temprature, never open radiator cap.
If you do that,the high temprature coolant will spray out and could cause serious burns.

DEALER PRE-DELIVERY INSPECTION

TEAM JOYNER USA

www.teamjoynerusa.com

DEALER PRE-DELIVERY INSPECTION

1245 N. Mondel Dr. • Gilbert, AZ 85233
Ph: 480-813-6363 • Fax: 480-813-6379

This form registers warranty

This form registers warranty

SOLD TO:

We have determined that your vehicle is safe to operate
☐ YES ☐ NO

Customer Name _____

Address _____

City _____ State _____ Zip _____

Email _____ Contact Person _____ Phone _____

Phone _____ Name _____ Fax _____ Cell _____

Technician _____ Supervisor _____

SALE DATE:	DELIVERY DATE:	YEAR:	MAKE:	VIN #:	COLOR:

ITEM	OPERATIONAL	ITEM	OPERATIONAL	ITEM	OPERATIONAL	ITEM	OPERATIONAL
Paint	Yes No	Carburetor	Yes No	Mirror	Yes No	Rear Diff	Yes No
Lug Nuts	Yes No	Throttle Cable	Yes No	Battery	Yes No	Wheel Bearings	Yes No
Axle Nuts	Yes No	Choke Cable	Yes No	Ignition	Yes No	Blinkers	Yes No
Tie Rods	Yes No	Emergency Brake	Yes No	Gauges	Yes No	Fuel Lines	Yes No
Axles	Yes No	Charging System	Yes No	Switches	Yes No	Steering Wheel	Yes No
CV Joint	Yes No	Tires/Wheels	Yes No	Fluids	Yes No	Clutch	Yes No
Seats	Yes No	Cooling System	Yes No	Gas	Yes No	Belts	Yes No
Seat Belts	Yes No	Winches	Yes No	Engine Oil	Yes No	Brake Pedal	Yes No
Wiring Harness	Yes No	A Arms	Yes No	Transmission Fluid	Yes No	EPA Sticker	Yes No
Brakes	Yes No	Swing Arms	Yes No	Gear Oil	Yes No	Carb Sticker	Yes No
Brake Lines	Yes No	Shocks	Yes No	Shock Oil	Yes No	Oil Vent System	Yes No
Brake Pads	Yes No	Steering Boy	Yes No	Coolant Fluid	Yes No		
Shifter	Yes No	Lights	Yes No	Brake Fluid	Yes No		
Throttle Pedal	Yes No	Horn	Yes No	Front Diff	Yes No		

REMARKS:

_____

_____

_____

Dealer Name _____

Address _____

City _____ State _____ Zip _____

Email _____ Contact Person _____ Phone _____

Phone _____ Name _____ Fax _____ Cell _____

Dealers Signature _____ **Date** _____

I agree to terms and conditions _____
Customer Signature **Date**

This form registers warranty

_____Jumping the vehicle can cause serious damage to the drive train (axle,

transmission, suspension).

_____Injury or death can result from jumping vehicle. Do Not Jump.

_____I understand that the roll bars are cosmetic and a roll over could cause death or serious injury. The seller is not liable for death or injury.

_____I have inspected all machines for any cosmetic damage and found it/them to be satisfactory. I further understand that cosmetic damage is NOT covered by any factory warranties and unless noted here are deemed accepted by me.

_____Sand dunning or desert riding is dangerous. Death or injury could occur. The seller is not liable for injury or death.

_____I understand all sales are final and that there is no right of rescission, no option for return or exchange for any vehicle purchased, and that the titled and registered machines were effectively purchased when I signed the title application.

_____I understand the warranty is 90 day manufacture defect only with the following not covered: axles, electrical batteries, light bulbs, clutches, turbo cartridges, carburetor cleaning, piston rings that are scorched from one revving, rims/tires, bearings.

_____I understand that although some lending institutions do not require insurance, state law DOES require liability insurance and a driver's license. I also understand that none of the products offered by the dealer constitutes insurance and a separate policy would have to be purchases from an outside source to protect my purchase and fulfill state requirements.

_____I have been shown the VIN number for each machine and they match this form and all paperwork received.

_____I understand that I have only 72 hours to notify the seller of any issues to the paperwork or the vehicle.

_____Off Road use only. Driving on paved roads can cause axle or transmission damage. Both tires turn equally, this is not a limited slip differential. Injury or death can occur form operating a non DOT vehicle on public roads.

_____Turbo systems, system lessen life of engine, over revving the engine to increase boost of turbo can cause engine damage. This will not be covered under warranty.

ADDITIONAL TERMS AND CONDITIONS OF SALE

1. PROMISE TO PAY. By signing this contract, Buyer agrees to pay Seller the "TOTAL DUE".
2. TIME OF ESSENCE. Time is of the essence of this contract. Sellers acceptance of partial payments shall not in any manner modify the terms of this contract and such acceptance shall not be construed as a waiver of any subsequent defaults on Buyer's part nor shall it waive the "time is of the essence" provision.
3. NOTICE. Any notice required to be given to Buyer shall be deemed reasonable notification if

(Ⅰ)mailed by ordinary mail, postage prepaid, to Buyer's mailing address as shown on this contract or to Buyer's most recent address as shown by a "notice of change of address" on file with Seller, whether or not such notice is actually received by buyer, or(Ⅱ) if given in any other manner which results in Buyer's actual receipt of such notice.

4. BAD CHECK. If Buyer pays Seller with a check that is dishonored or unpaid for any reason, Seller may at Seller's sole option, terminate this contract and retake the vehicle, or make claims against Buyer on the check. In addition, Seller will charge Buyer a $25 returned check charge plus any actual charges assessed by Seller's

financial institution resulting from such returned check.

5. ATTORNEYS FEES. If it is necessary for Seller to take legal action to enforce any of seller's rights under this contract, Buyer agrees to pay to the extent permitted by law, the seller's reasonable attorneys fees and court costs.
6. GENERAL. This contract is governed by applicable federal law and the laws of the State of Arizona. Any provisions found to be invalidate the remainder hereof, Waiver of any default shall not constitute waiver of any subsequent default. All words used herein shall be construed to be of such gender and number as the circumstances require. The contract shall be binding upon Buyer's heirs, personal representatives, successors and assigns and shall inure to the benefit of Seller's successors and assigns. This contract constitutes the entire agreement between the parties with respect to the subject matter herein, and may not be altered or amended unless made in writing and duty executed by Seller.
7. CASH DEPOSIT. If Buyer fails or refuses to accept delivery of any Vehicle or product or fails to comply with this contract, Seller may keep any cash deposit as liquidated damages, to the extent not prohibited by law. The deposit may also be used reimburse Seller for any expenses and losses Seller incurs or suffers as a result of Buyer's failure or refusal to accept deliver of the Vehicle or product or to comply with this contract. Such expenses and losses may include Seller s reasonable attorney's fees.
8. NON-DELIVERY. Seller is not liable for failure to deliver or for delay in delivering the Vehicle or other product where such failure or delay is due, in whole or in part, to any cause beyond Seller's control or without Seller's fault or negligence,
9. RISK OF LOSS, INSURANCE. The risk of loss to the Vehicle or any other items covered by this invoice passes to Buyer upon delivery of the Vehicle or other goods to Buyer at the address set forth on this invoice for shipment to Buyer or such other place of receipt designated by Buyer. Buyer is responsible for maintaining its own theft and liability insurance coverage for the Vehicle.
10. AGE. Buyer represents and warrants to Seller that Buyer is over the age of majority and is fully competent to enter into this contract. Buyer acknowledges that Seller is relying on this representation in entering into and performing this contract.

ADDITIONAL TERMS AND CONDITIONS OF SALE

1. PROMISE TO PAY. By signing this contract, Buyer agrees to pay Seller the "TOTAL DUE".
2. TIME OF ESSENCE. Time is of the essence of this contract, Seller's acceptance of partial payments shall not in any manner modify the terms of this contract and such acceptance shall not be construed as a waiver of any subsequent defaults on Buyer's part nor shall it waive the "time is of the essence" provision.
3. NOTICE. Any notice required to be given to Buyer shall be deemed reasonable notification if(Ⅰ)mailed by ordinary mail, postage prepaid, to Buyer's mailing address as shown on this contract or to Buyer's most recent address as shown by a "notice of change of address" on file with Seller, whether or not such notice is actually received by Buyer, or (Ⅱ) if given in any other manner which results in Buyer's actual receipt of such notice.
4. BAD CHECK. If Buyer pays Seller with a check that is dishonored or unpaid for any reason, Seller may at Seller's sole option, terminate this contract and retake the

vehicle, or make claims against Buyer on the check. In addition, Seller will charge Buyer a $25 returned check charge plus any actual charges assessed by Seller's financial institution resulting from such returned check.

5. ATTORNEYS FEES. If it is necessary for Seller to take legal action to enforce any of Seller's rights under this contract. Buyer agrees to pay to the extent permitted by law, the seller's reasonable attorney's fees and court costs.
6. GENERAL. This contract is governed by applicable federal law and the laws of the State of Arizona. Any provisions found to be invalid shall not invalidate the remainder hereof. Waiver of any default shall not constitute waiver of any subsequent default. All words used herein shall be construed to be of such gender and number as the circumstances require. The contract shall be binding upon Buyer's heirs, personal representatives, successors and assigns and shall inure to the benefit of Seller's successors and assigns. This contract constitutes the entire agreement between the parties with respect to the subject matter herein, and may not be altered or amended unless made in writing and duly executed by Seller.
7. CASH DEPOSIT. If Buyer fails or refuses to accept delivery of any Vehicle or product or fails to comply with this contract, Seller may keep any cash deposit as liquidated damages, to the extent not prohibited by law. The deposit may also be used to reimburse Seller for any expenses and losses Seller incurs or suffers as a result of Buyer's failure or refusal to accept delivery of the Vehicle or product or to comply with this contract. Such expenses and losses may include Seller's reasonable and loses Seller incurs or suffers as a result of Buyer's failure or refusal to accept delivery of the Vehicle or product or to comply with this contract .Such expenses and losses may include Seller's reasonable attorney's fees.
8. NON-DELIVERY. Seller is not liable for failure to deliver or for delay in delivering the vehicle or other product where such failure or delay is due. In whole or in part, to any cause beyond Seller's control or without Seller's fault or negligence.
9. RISK OF LOSS: INSURANCE. The risk of loss to the vehicle or any other items covered by this invoice passes to Buyer upon delivery of the vehicle or other goods to Buyer at the address set forth on this invoice for shipment to Buyer or such other place of receipt designated by Buyer. Buyer is responsible for maintaining its own theft and liability insurance coverage for the vehicle.

AGE. Buyer represents and warrants to Seller that Buyer is over the age of majority and is fully competent to enter into contact. Buyer acknowledges that Seller is relying on this representation in entering into performing this contract.