PGO
BUILD 4 FUN

BR-500

http:www.english.pgo.com.tw

ATTENTION :

- **DO NOT attempt to operate or select the FORWARD/REVERSE gears unless the vehicle is completely stationery, otherwise you will damage the gearbox**
- **The FORWARD/REVERSE gears can and must only be operated when the brake pedal is pushed to bottom.**

Check List before Delivery

1. Please fill the below basic customer data:

Name			Telephone	Registration date
Address				
Model		Displacement CC	Engine NO.	VIN.No.

2. Please fill the below check list before delivery by dealer:

NO	Check Item	Y	N	NO	Check Item	Y	N
1	Steering Wheel			8	Engine Coolant		
2	Gap of throttle Pedal			9	Tire Pressure		
3	Gap of Brake Pedal			10	Confirm Engine ,VIN No & Document		
4	Lights and Horn			11	Owner's Manual		
5	Fuel Tank and Fuel Kind			12	Operating Method Introduction		
6	Engine Oil			13	Periodic Maintenance introduction		
7	Disk Brake fluid			14	Warranty Introduction		

- **Make a copy when writing above data;**
- **Tear down this page to dealer.**

Customer Signature	Dealer Signature

ATTENTION :

- **DO NOT attempt to operate or select the FORWARD/REVERSE gears unless the vehicle is completely stationery, otherwise you will damage the gearbox**
- **The FORWARD/REVERSE gears can and must only be operated when the brake pedal is pushed to bottom.**

Check List before Delivery

1. Please fill the below basic customer data:

Name			Telephone	Registration date
Address				
Model		Displacement CC	Engine NO.	VIN.No.

2. Please fill the below check list before delivery by dealer:

NO	Check Item	Y	N	NO	Check Item	Y	N
1	Steering Wheel			8	Engine Coolant		
2	Gap of throttle Pedal			9	Tire Pressure		
3	Gap of Brake Pedal			10	Confirm Engine ,VIN No & Document		
4	Lights and Horn			11	Owner's Manual		
5	Fuel Tank and Fuel Kind			12	Operating Method Introduction		
6	Engine Oil			13	Periodic Maintenance introduction		
7	Disk Brake fluid			14	Warranty Introduction		

■ **Keep this page for customer.**

Customer Signature	Dealer Signature

OWNER'S MANUAL

Page

1.FOREWORD.....1

2.A FEW WORDS ABOUT SAFETY.....4

3.IMPORTANT SAFETY INFORMATION.....5

4.SAFETY LAVELS.....7

5.ARE YOU READY TO DRIVE?.....8

6.IS YOUR VEHICLE READY TO DRIVE?.....10

7.SAFE DRIVING PRECAUTIONS.....11

8.OPERATION.....13

9.SERVICE INSTRUCTIONS.....24

10.REPAIR.....32

11.PERIODICAL CHECK AND SERVICE.....40

12.ELECTRIC PARTS.....43

13.APPENDIX.....53

DEAR CUSTOMERS:

Thank you for choosing **BugRacer** of **PGO** buggy. We hope you will enjoy it ! Before you start to operate the buggy, please read through this Owner's Manual carefully as it contains important safety and maintenance information. Failure to follow the warnings contained in this manual can result serious injuries or even death.

It is a fact that the efficiency and sustaining life of each buggy depend heavily on the operating method of each user. Thus this owner's manual will provide you a precise knowledge of easy adjusting, sustaining and precaution for your buggy. We hope you will read and check it carefully.

Please recognize your buggy model clearly in order to read the following instruments. If there is any question, please do not hesitate to ask your dealer for assistance.

Manufactured by
MOTIVE POWER INDUSTRY CO.,LTD.
1st edition in 2007.03

PGO LIMITED WARRANTY FOR BUGGY

This is to be presented by the authorized PGO dealer to the purchaser of PGO BUGGY. We provide the following services:

1. TO OBTAIN THE WARRANTY SERVICE

A.Effectiveness of the warranty

a.After completing all the information listed in the warranty card, the PGO dealer will return the warranty card to customer.

b.Please bring the vehicle back to the original dealer where you bought the vehicle for initial maintenance within 30 days after purchase, afterwards the warranty is effective.

B.Warranty period

- The warranty period is two (2) years from the date of registration (or purchase) or within 12,000 kilometers, ends either of the condition is reached firstly. Following components are warranted within 12 months, or within 6,000 kilometers, ends either of the condition is reached firstly.
- Such as steering tie rods, steering shaft, absorbers, brake disk and hub, face movable drive assembly, muffler, driving shaft(CV joint), are warranted within 12 months.

2. PROCEDURE OF THE WARRANTY

a.The customer must maintain vehicle periodically according to PGO owner's book and keep the complete maintenance record.

b.The dealer shall check the warranty card, periodical maintenance record, License registration card for the customer.

c.Only the PGO authorized dealer can accept the warranty application.

3. THINGS NOT COVERED IN THIS WARRANTY

A.Any of the followings are not covered:

- MADE ANY MODIFICATION OF THE BUGGY, SUCH AS REMOVE THE ENGINE POWER RESTRICTION or TUNING THE ENGINE POWER.
- VEHICLES USED FOR OFF-ROAD, COMPETITION, PERFORMANCE OR RENTAL BUSINESS.
- Defects caused by inappropriate maintaining or any artificial damages.
- Any accidents caused by natural disasters or out of human's control.

Do Not Perform Stunts

You should always operate your Buggy in a safe and reasonable manner. When driving, always keep all four wheels on the ground.

⚠ WARNING

Attempting wheelies, jumps, and other stunts increases the chance of an accident, including an overturn.

Never attempt stunts, such as wheelies or jumps. Don't try to show off.

- Did not use fuel or spare parts provided or recommended by the PGO.
- Any re-assembling or dismantling of vehicles which violates the rules of PGO service manual.
- Defects caused by taking off the original manufactured components or equipment.
- Improper storage or transport.
- Not following the riding rules or traffic regulation of local authority, PGO owner's manual.
- Vehicle operated by unlicensed rider.

B. The following expenses are not covered:

(1)Consumable goods (including battery, bulbs, rubbers, cables, screws, piston rings, spark plugs, gaskets, brake pads, brake linings, clutch lining, springs, V-belt, driving chain, CVT-rollers, fuses, air filter elements, oil filter, fuel filter)

(2)Material of periodic maintenance and inspection, such as fuel, lubricant and fluid.

(3)Any costs caused by the break down of the BUGGY. (including telephone bill, travel fee, transportation fee, rental fee, fines)

4. INTERRUPTION OF THE WARRANTY PERIOD

The user should send the BUGGY to repair immediately after the defects are found. If the defect worsens due to the delay of the repair, the PGO will not be responsible for the damage.

5. IF THERE IS A MAJOR CHANGE IN THE WARRANTY COVERAGE, THE PGO WILL MAKE OFFICIAL ANNOUCEMENT TO ALL DEALERS AND WILL NOT MAKE INDIVIDUAL NOTICE

A FEW WORDS ABOUT SAFETY

In order to keep everyone safe, you must take responsibility for the safe operation of your Buggy.

To help you make informed decisions about safety, we have provided operating procedures and other information on labels and in this manual. This information alerts you to potential hazards that could hurt you or others.

It is not practical or possible to warn you about all hazards associated with operating or maintaining a buggy. You must use your own good judgment.

You will find important safety information in a variety of forms, including:

Safety Labels – On the buggy.

Safety Messages – Preceded by a safety alert symbol ⚠ and one of two signal words: **WARNING,** or **CAUTION**.

These signal words mean:

⚠ WARNING

Physical harm may result from failure to adhere to the instructions that are described within the WARNING labels.

Safety Headings — such as Important Safety Reminders or Important Safety Precautions.

Safety Section — such as buggy Safety.

Instructions — how to use this buggy correctly and safely.

This entire manual is filled with important safety information—please read it carefully.

Your buggy will provide you with many years of service and pleasure.Providing you take responsibility for your own safety and understand the challenges you can meet while driving.

There is much that you can do to protect yourself when you drive. You'll find many helpful recommendations throughout this manual. The following are a few that we consider most important.

Always Wear a Helmet

It's a proven fact: helmets significantly reduce the number and severity of head injuries. Always wear an approved motorcycle helmet. We also recommend that you wear eye protection, sturdy boots, gloves, and other protective gear.

Take Time to Learn & Practice

Even if you have driven other buggy , take time to become familiar with how this buggy works and handles. Practice in a safe area until you build your skills and get accustomed to this buggy's size and weight.

Because many accidents involve inexperienced or untrained drivers, we urge all drivers to take a training course approved by the Go-Kart Safety Institute. Check with your dealer for more information on training courses.

Be Alert for Off-Road Hazards

The terrain can present a variety of challenges when you drive off-road. Continually "read" the terrain for unexpected turns, drop-offs, rocks, ruts, and other hazards. Always keep your speed low enough to allow time to see and react to hazards.

Do Not Perform Stunts

You should always operate your Buggy in a safe and reasonable manner. When driving, always keep all four wheels on the ground.

⚠ WARNING

Attempting wheelies, jumps, and other stunts increases the chance of an accident, including an overturn.

Never attempt stunts, such as wheelies or jumps. Don't try to show off.

Drive within Your Limits

Pushing limits is another major cause of buggy accidents. Never drive beyond your personal abilities or faster than conditions warrant. Remember that alcohol, drugs, fatigue, and inattention can significantly reduce your ability to make good judgments and drive safely.

Don't Drink and drive

Alcohol and driving don't mix. Even one drink can reduce your ability to respond to changing conditions, and your reaction time gets worse with every additional drink. So don't drink and drive, and don't let your friends drink and drive either.

Seldom operate this Buggy at night.

Dark vision can greatly reduce a driver's visibility and judgement. So driving at night is dangerous and can increase possibility for an accident.

Never run your Buggy indoors.

The exhaust from the engine contains a tasteless, odorless and poisonous gas called carbon monoxide.

Keep away from moving parts of the Buggy

The operator of the buggy should never place their hands or other parts of their body near any moving part of the buggy. Failure to adhere to this warning will cause physical harm to your body.

Skidding or Sliding

The terrain surface can be a major factor affecting turns. Skidding a turn is more likely to occur on slippery surfaces such as snow, ice, mud and loose gravel. If you skid on ice, you may lose all directional control. To avoid skidding on slippery terrain, keep you speed low and drive carefully.

This section presents some of the most important information and recommendations to help you drive your buggy safely. Please take a few moments to read these pages.

The labels should be considered permanent parts of the Buggy. If a label comes off or becomes hard to read, contact your dealer for warning label replacements.

ATTENTION :

- DO NOT attempt to change the GEARS unless the vehicle is completely stationary, otherwise you will damage the gearbox.
- Ne pas tenter de changer de vitesse, à moins que le véhicule s'arrête complètement, sinon vous risquez d'endommager la boîte de vitesse.

Gear-Box operating Warning

LOCK ← Differential → UNLOCK

Differential Gear operating Indication

ATTENTION

- Minimum 50% of Radiator coolant must be present.
- La plus basse proportion de la fuide de refroidissement de radiateur doit être 50%.

Coolant proportion instruction

WARNING

NO RIDING
MAX LOAD 10KG
NE PAS MONTER
CHARGEMENT 10KG

Rear-Rack Load Warning

ATTENTION :

The warranty of this vehicle will be deprived or lost if MADE ANY MODIFICATION OF THE BUGGY , SUCH AS REMOVE THE ENGINE POWER RESTRICTION or TUNING THE ENGINE POWER ; or VEHICLE USED FOR OFF-ROAD , PERFORM STUNTS , JUMPS.

Don't make any modifications

ARE YOU READY TO DRIVE?

Before each drive, you need to make sure you and your Buggy are both ready to drive. To help get you prepared, this section discusses how to evaluate your driving readiness, what items you should check on your Buggy , and adjustments to make for your comfort, convenience, or safety.

Before you drive your Buggy for the first time, we urge you to:

- Read this owner's manual and the labels on your Buggy carefully.
- Make sure you understand all the safety messages.
- Know how to operate all the controls.
- Have adult present if under 16 years old.

Before each drive, be sure:

- Wear your seat belt at all times while driving your buggy .
- You feel well and are in good physical and mental condition.
- You are wearing an approved motorcycle helmet (with chin strap tightened securely), eye protection, and other protective clothing.
- You don't have any alcohol or drugs in your system.

Protective Apparel

For your safety, we strongly recommend that you always wear an approved motorcycle helmet, eye protection, boots, gloves, long pants, and long-sleeved shirt or jacket whenever you drive.

Although complete protection is not possible, wearing proper gear can reduce the chance of injury when you drive.

The following suggestions will help you choose the proper driving gear.

Helmets and Eyes Protection

Your helmet is your most important piece of driving gear because it offers the best protection against head injuries. A helmet should fit your head comfortably and securely.

An open-face helmet offers some protection, but a full-face helmet offers more. Regardless of the style, look for an authorized sticker in any helmet you buy. Always wear a face shield or goggles to protect your eyes and help your vision.

⚠ WARNING

Operating this buggy without wearing an approved motorcycle helmet, eye protection, and protective clothing could increase your chances of head and/or eye injury, possibly death in the event of severe accident.

Always wear approved motorcycle helmet that fits properly and wear eye protection (goggles or face shield), gloves, boots, long-sleeved shirt or jacket and long pants.

Additional Driving Attention

In addition to a helmet and eye protection, we also recommend:

- Sturdy off-road motorcycle boots to help protect your feet, ankles, and lower legs.
- Off-road motorcycle gloves to help protect your hands.
- Driving pants with knee and hip pads, a driving jersey with padded elbows, and a chest/shoulder protector.

Driver Training

Developing your driving skills is an on-going process. Even if you have driven other Buggy, take time to become familiar with how this Buggy works and handles. Practice driving the Buggy in a safe area to build your skills. Do not drive in rough terrain until you get accustomed to the Buggy's controls, and feel comfortable with its size and weight.

⚠ WARNING

Operating this Buggy without your seat belt could cause you to be thrown from the buggy, causing serious injury or death.

⚠ WARNING

A child driving a Buggy that is not recommended for his/her age could lose Buggy control and result in severe injury or death.

A child under 16 should have adult supervision when operate the Buggy.

No Alcohol or Drugs

Alcohol, drugs and Buggy don't mix. Even a small amount of alcohol can impair your ability to operate a Buggy safely. Likewise, drugs-even if prescribed by a physician-can be dangerous while operating a Buggy. Consult your doctor to be sure it is safe to operate a vehicle after taking medication.

⚠ WARNING

Operating this buggy after consuming alcohol or drugs can seriously affect your judgement, cause you to react more slowly, affect your balance and perception, and could result in serious injury or death.

Never consume alcohol or drugs before or while operating this Buggy.

IS YOUR VEHICLE READY TO DRIVE?

Before each drive, it is important to inspect your Buggy and make sure any problems you find are corrected. A pre-drive inspection is a must, not only for safety, but because having a breakdown, or even a flat tire, can be a major inconvenience.

If your Buggy has overturned or has been involved in a collision, do not drive it until your Buggy has been inspected by your dealer. There may be damages or other problems you can not see.

⚠ WARNING

Improperly maintaining this Buggy or failing to correct a problem before driving can cause a crash in which you can be seriously hurt or killed.

Always perform a pre-drive inspection before every drive and correct any problems.

Pre-drive Inspection

Check the following items before you get on the Buggy :

- Engine Oil

  Check the level and add oil if needed. Check for leaks.

- Fuel

  Check the level and add fuel if needed. Also make sure the fuel fill cap is securely fastened. Check for leaks.

- Engine coolant (reserved)

  1. Inspect the level of reserved tank, fill it to the Maximum-line when the level is lower than the Minimum-line, using the coolant mixed with distilled water only.
  2. Don't open the cap of radiator when the engine is hot !

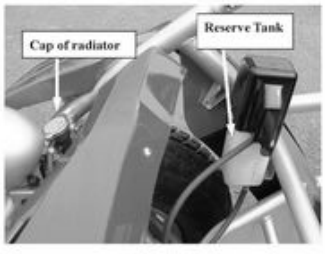

- Tires

  Use a gauge to check the air pressure. Adjust if needed. Also look for signs of damages or excessive wear.

- Tires should be inflated to the recommended pressure.

  Off road: FRONT:0.25~0.30kgf/cm^2 REAR:0.25~0.30kgf/cm^2

  On road: FRONT:0.40~0.60kgf/cm^2 REAR:0.40~0.60kgf/cm^2

  The pressure should be checked when the tires are "cold" before running the vehicle.

- Nuts & Bolts

  Check the wheels to see that the axle nuts are tight. Use a wrench to make sure all accessible nuts, bolts, and fasteners are tight.

- Underbody & Exhaust System

  Check for and remove any dirt, vegetation or other debris that could be a fire hazard or interfere with the proper operation of the Buggy .

- Air Cleaner Housing

  Check the air cleaner housing.

- Leaks, Loose Parts

  Walk around your Buggy and look for anything that appears unusual, such as a leak or loose cable.

- Lights

  Make sure the headlight, brake light and taillight are working properly.

- Throttle

  Check the freeplay and adjust if needed. Press the throttle to make sure it moves smoothly without sticking, and snaps back automatically when it is released.

- Brakes

  Press the rear brake pedal several times, check for proper brake pedal freeplay. Make sure there is no brake fluid leakage.

- Vehicle Hazard

  While key is on, press and hold the Hazard Button for two seconds. Make sure signal lamps are twinkling.

- Steering Wheel

  Check that the wheels turn properly as you turn the steering wheel.

- Cable

  Check all cable housings for wear. Check the fittings for looseness. Replace or tighten as needed.

SAFE DRIVING PRECAUTION

Keep Hands and Feet on Controls

Always keep both hands on the steering wheel and both feet on the foot controls. When driving your Kart. It is important to maintain your balance and to control the Buggy . Removing hands or feet away from the controls can reduce your ability to react and control the buggy.

⚠ WARNING

Removing hand from Steering wheel or feet from foot controls during operation can reduce your ability to control the Buggy or could cause you to lose your balance and fall off the buggy.

Always keep both hand on the steering wheel and both feet on the foot controls of your Buggy during operation.

Control Speed

Driving at excessive speed increases the chance of an accident. In choosing a proper speed, you need to consider the capability of your Buggy , the terrain, visibility and other operating conditions, plus your own skills and experience.

⚠ WARNING

Operating this Buggy at excessive speeds increases your chances of losing control of the Buggy , which can result in an accident.

Always drive at a speed that is proper for your Buggy , the terrain, visibility and other operating conditions, and your experience.

Use Care on Unfamiliar or Rough Terrain

Before driving in a new area, always check the terrain thoroughly. Don't drive fast on unfamiliar terrain or when visibility is limited.(it's sometimes difficult to see obstructions like hidden rocks, bumps, or holes in time to react.)

⚠ WARNING

Failure to use extra care when Operating this Buggy on unfamiliar terrain could result in the Buggy overturning or going out of control.

Go slowly and be extra careful when operating on unfamiliar terrain. Always be alert to changing terrain conditions when operating the Buggy .

Never drive past the limit of visibility. Maintain a safe distance between your Buggy and other off-road vehicles. Always exercise caution and use extra care on rough, slippery and loose terrain.

⚠ WARNING

Failure to use extra care when operating on excessively rough, slippery or loose terrain could cause loss of traction or vehicle control, which could result in an accident, including an overturn.

Do not operate on excessively rough, slippery or loose terrain until you have learned and practiced the skills necessary to control the buggy on such terrain. Always be especially cautious on these kinds of terrain.

Do Not Perform Stunts

You should always operate your Buggy in a safe and reasonable manner. When driving, always keep all four wheels on the ground.

⚠ WARNING

Attempting wheelies, jumps, and other stunts increases the chance of an accident, including an overturn.

Never attempt stunts, such as wheelies or jumps. Don't try to show off.

A. Operation controls

WARNING-Do not attempt to start or operate the engine until completely familiar with the Location and use of each control necessary to operate this vehicle. The operator must know how To stop this machine before starting and driving it.

a. Throttle

The right foot pedal is the throttle that controls the buggy speed. As the engine speed Increased above idle, the clutch automatically engages and moves the vehicle forward. To disengage the clutch at any time, allow the throttle to return to the idle position. (See Figure)

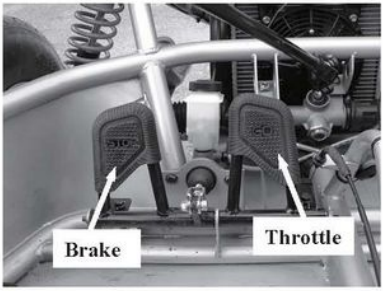

⚠ WARNING

Each time prior to starting the engine, check the throttle assembly to ensurethat when the pedal is pushed all the way forward the assembly is workingsmoothly and returns to idle. If unable to correct the problem through lubrication,linkage fail to return to idle. If unable to correct the problem through lubrication,adjustment or replacement of worn parts, contact your dealer for assistance.

b. Brake

The brake is located on the left side of the buggy (See Fig.1). Applying pressure to the Pedal draws the brake caliper around the brake pump at the rear wheel and slows or stops The buggy.

c. Start engine

1. Insert the key into key-switch, push the braking pedal and turn the key clockwise, release the key when the engine starts.
2. The engine will warm up within 5 minutes and the engine choke will close automatically.
3. Don't crank starter more than 5 seconds at one time).

Make sure the shifting lever is on **"N"** position, otherwise you can not start the engine.

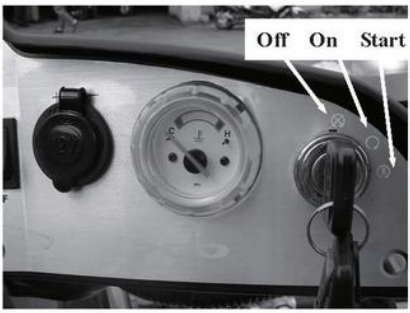

d. Parking button

Important-Parking button test.

Before driving this vehicle, test the Parking Button to assure that it is operating properly. With the key on, push and hold the Parking Button for two seconds for the signal lamps to twinkle.

e. Control panel of BR-500

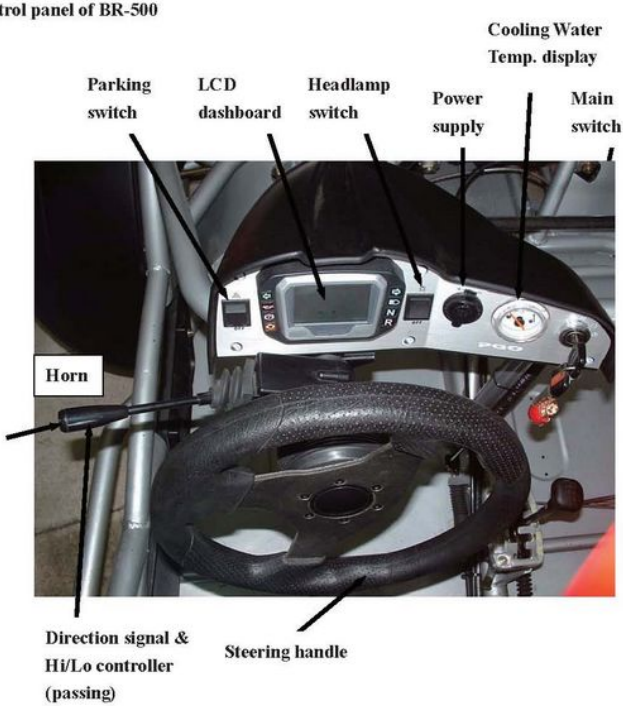

f. Fuel cap

The fuel cap is located at the rear-right side of the buggy, insert the main key, turn it clockwise to open the cap, fill with unleaded fuel only.

g. Digital LCD Speedometer

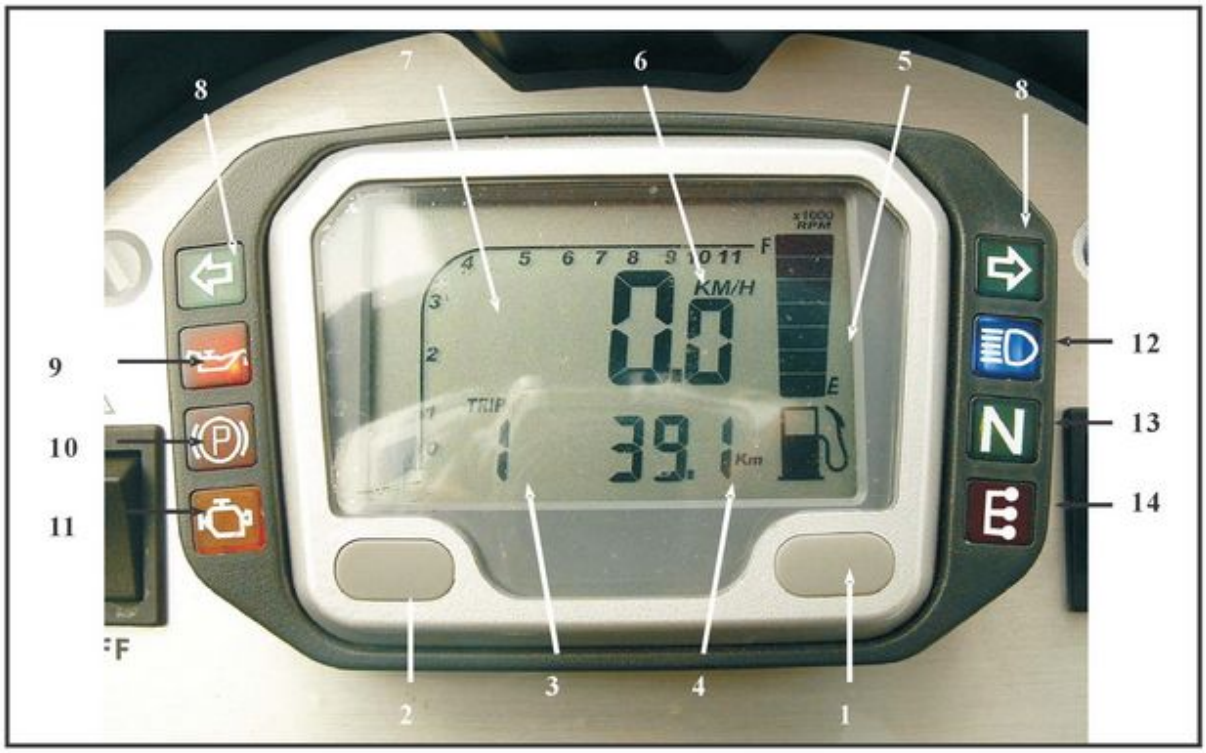

1.Symbol description

(1) MODE button
(2) RESET button
(3) TRIP display : kilometer or mile
(4) ODOMETER display : kilometer or mile
(5) Fuel amount display
(6) Speed display : km/h or mile
(7) Engine speed display area : (* 1,000 round/min)
(8) Signal indicator lamp
(9) Oil warning indicator lamp: when the oil pressure is too low, this lamp warns you to inspect the engine oil level.
(10) Parking indicator lamp
(11) EMS check indicator lamp: when this lamp is ON during driving, you have to inspect the EMS as soon as possible.
(Excludes the initial self-test after the main key is ON !)
(12) High beam indicator lamp
(13) Neutral gear indicator lamp: only at this position that you can start the engine.
(14) You can't shift the gear until this bulb lights ON. That means you have to push the brake pedal and keep the engine speed below 3,000 rpm first!

2. Setting:

Press "**MODE + RESET**" 2 sec., then can get into the setting procedure.

①Button operation

Situation / Button	Setting	Main menu
B. MODE	↓ : to next parameter ▼2: escape	↓ : switch display
RESET	↓ : digital + 1 ▼2: no function	↓ : no function ▼2: Reset RT, MAX, TRIP
MODE + RESET	no function	▼2: setting parameter

- 「↓」 means press button one time.
- 「▼2」 means press button and hold 2 seconds..
- If without pressing any button during 75 sec., it will escape to main menu automatically.

②**Unit**: km/h or mile/h, switched by **RESET**, and **MODE**(2 sec) to confirm

③**Wheel circumstance (C)** : from 1 to 3999 mm, 4 digitals individually set by **RESET** to increase one by one, and **MODE**(2 sec) to next digital. Finally press **MODE** 2 sec. to escape setting; **the default value is 2155** for BR-500.

④**12/24**: day time showing, if you select "12", then it will show AM or PM.

⑤**rpm**: Engine high speed warning limit

accelerating the engine to shifting-warning-speed, and press **RESET** to input this parameter; hereafter when the engine reaches this speed, the display rpm will twinkling to warn you reducing the engine speed.

⑥**SPC**: Engine ignition parameter (0.5/1.0/1.5/2.0), **the default value is 2.0**.

3. Display description: switched by MODE in main menu.

- SPD: real time speed, KM/H or MPH switched by RESET button.
- TRIP: trip distance from last RESET, press RESET to zero again.
- MAX: maximum speed after last RESET, press RESET to zero again.
- RT: operating time from last RESET, press RESET to zero again.
- AVG: average speed from last RESET, press RESET to zero again.
- MAX RPM: maximum engine speed after last RESET, press RESET to zero again.
- ODO: accumulated distance from this speedometer been used, it can not be RESET.
- TT: operating time from this speedometer been used, it can not be RESET.

h. Cooling water warning

When the indicator reaches **RED** area, that warns you the temperature of cooling water is too high, you have to stop the engine and cold down the temperature immediately.

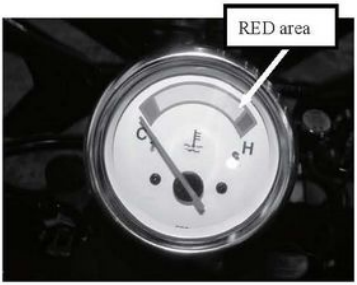

B. Pre-Drive Inspection

⚠ WARNING

Perform this pre-drive inspection everyday before driving vehicle. If notPerformed, serious damage to the vehicle or personal injury may result.Always follow rules for safe operation and wear a helmet.

a. Check for Engine Oil Level. Check for leaks, add oil if required.
b. Check for Fuel Level. Add fuel as necessary and do not overfill. Check for leak.
c. Check for engine coolant, Add coolant as necessary and check for leaks.
d. Check for Brakes. Depress the rear brake pedal several time, then check for proper brake pedal free-play. Make sure there is no brake fluid leakage. Adjust if necessary.
e. Check Tires. Check tires condition and pressure.
f. Check Throttle. Check for smooth operation. Assure throttle "snaps" back to idle.
g. Check Parking Button. Perform button test. Repair as necessary.
h. Check all Nuts, Bolts, and fasteners. Check wheels to see that all axle nuts and lug nuts are tightened properly. Check and tighten as necessary all other fasteners to specified condition.
i. Check Roll Cage Bar. Ensure all protective roll cage bars are in place before operating the Kart.
j. Check Brake Light. Check for proper operation.
k. Check Wheels. Check for tightness of wheel nuts and axle nuts; check that axle nuts are secured by cotter pins.
l. Check Steering. Check for free operation for any unusual looseness in any area.

C. Component Location

1. Vehicle Identification Number (VIN) is located (stamped)at the right side of frame.

   NOTE:

   The first 9 digitals are type, the last 8 digitals are production serial numbers.

   Your dealer need this number for ordering the parts, Please write down the engine no. for their reference.

2.Engine No. is located (stamped)on the rear side of the left crankcase.

   NOTE:

   The upper row is model type, the lower row is production serial numbers.

   Your dealer need this number for ordering the parts, please write down the engine no. for their reference.

3. Basic Component locations

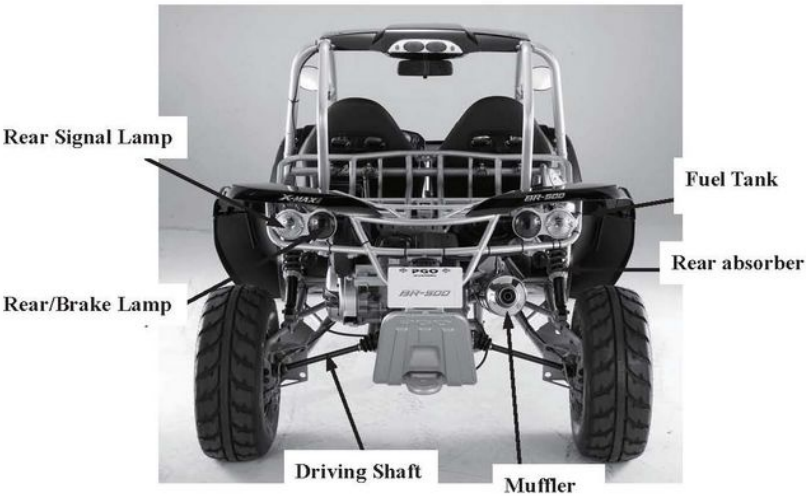

D. Passengers

The vehicle allows for two riders only. Be sure that the driver and passenger are seated properly in the buggy with the **seatbelts**. Otherwise it will be very dangerous for you!

E. Seat Adjustment

The seat must always be securely fastened on the position which best affords the operator control of the foot pedals, steering wheel, and the emergency stop ignition key.

a. Pull seat adjustment handle upward to disengage seat slide.
b. Move seat to desired position.
c. Be sure seat adjustment handle snaps back into place and that seat is locked into position.

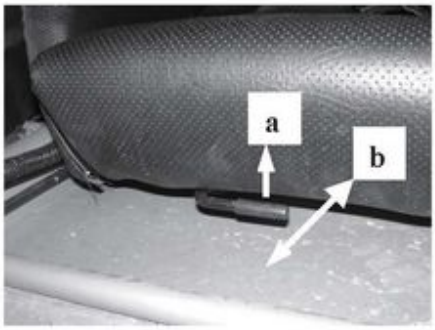

⚠ WARNING

Before attempting to adjust the seat ensure that engine of the buggy is stopped.

Never operate this buggy when the provided seat is not securely fastened, to do so could result in strongPossibility of severe personal injury or loss of life.Before attempting to adjust the seat ensure that engine of buggy is stopped.

F. Driving control

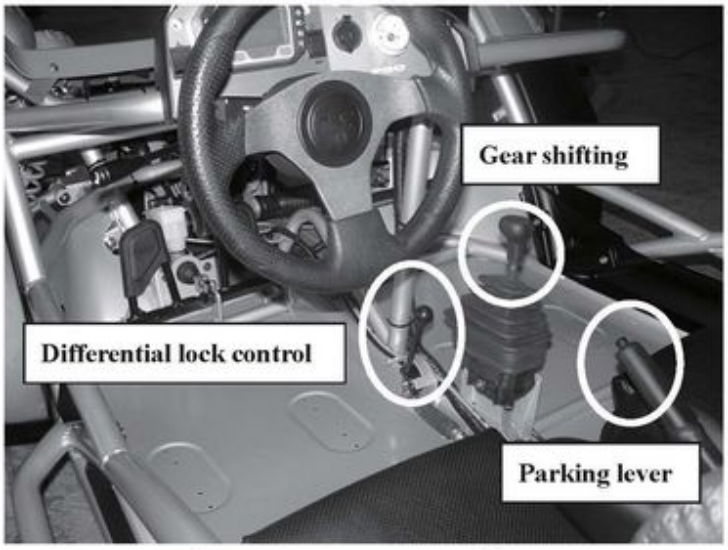

⚠ WARNING

When shifting the lever to "R", you have to brake the vehicle (by the brake pedal)simultaneously, otherwise the engine will stop automatically for your safety.

G. Gear-shifting lever

There are 5 gear selections as figure shown, and every time you have to push the brake pedal and keep engine speed below 3,000 rpm to operate controlling!

- H: High speed range forward, usually used in on-road condition.
- L: Low speed range forward, usually used in heavy duty condition.
- N: Neutral, the vehicle can't be moved by the engine.
- R: Reverse

Attention!

- Shift the gear Only when the buggy is stationary for the machine's good.
- Keep in "N" position when you stop the buggy for your safety.
- refer to the gear shift box as right photo, practice making gear lever slide into correct position. Be more familiar with the gear lever shift route, and it will get easier to enjoy driving.

Tips: When shifting, push the throttle pedal a little to help you shifting. But don't exceed 3,000 rpm of the engine speed!

- Drain the water or oil after a period of operation.

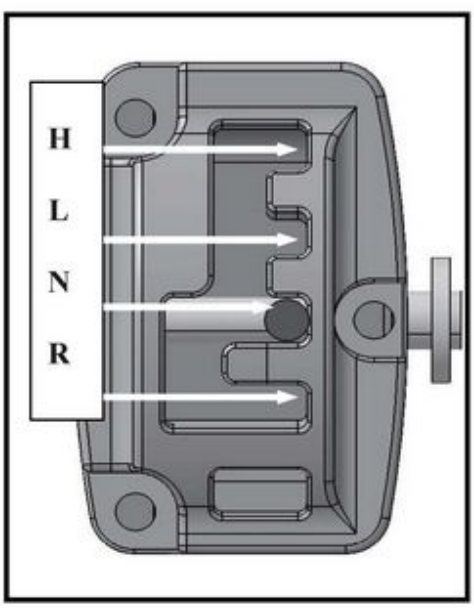

H. Differential control lever

- LOCK: means the differential gear box is ineffective, usually used in Low speed range forward, heavy duty condition.
- UNLOCK: means the differential gear box is effective, usually used in High speed range forward, on-road condition.
- Shift the gear Only when the buggy is stationary for the machine's good.

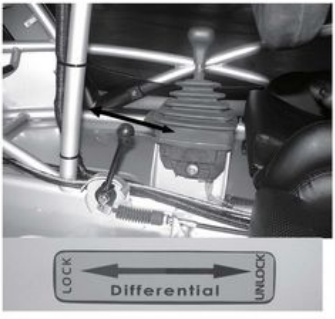

I. Parking Adjustment

- pull back the lever to park the vehicle.
- When parking is active, the vehicle can't move by hand.
- If the parking power isn't enough, screw in the nut(as figure shown) to adjust the power
- Lubricate the adjusting nut whenever maintain the vehicle.

J. Starting And Operation Instructions

a. Before starting the engine, be sure that the driver is seated properly in the buggy with the **seatbelt**.
b. Testing the buggy in an open space at the beginning to learn how to start, turn and stop.
c. Operate the buggy slowly until you are familiar with it.
d. The turning radius of this buggy is small and agile, so the centrifugal force is very high when turning at high speed. Slow down to a more controllable speed when turning to prevent the buggy from rolling over.
e. To prevent vehicle from rolling over, be sure to only turn the vehicle at a slow more controllable speed. Heel on the ramp of the main board when turning. Keep your Leg rely on the foot pedal, you can feel the buggy is stable because of the gravity is adjusted and won't roll over.

Attention!

- Although the vehicle allows you to start the engine at any gear positions, but keep in mind always shifting at "N" to start the engine is much safer for you!

K. General adjusting parts:

Hand park adjusting nut

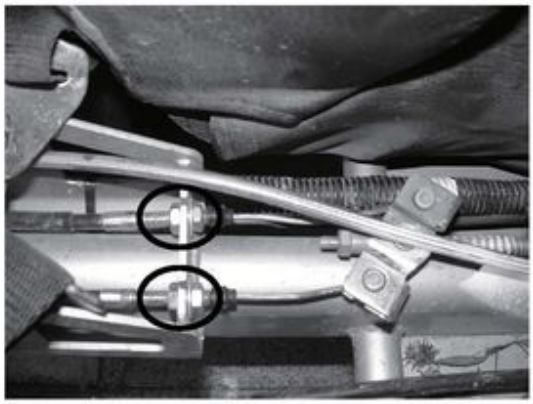

Hand park cable adjusting nut

Clearance adjusting nut for throttle
Stop bolt for "GO" pedal

Lock nut for throttle cable

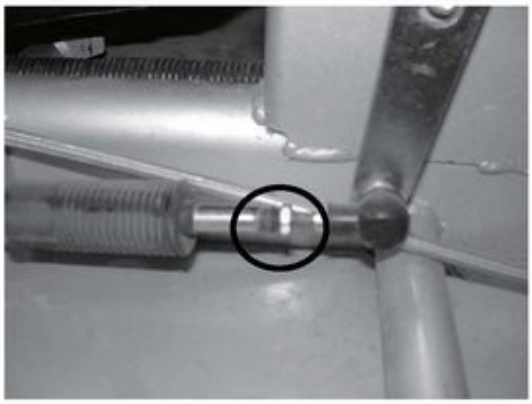

Adjusting nut for shifting cable

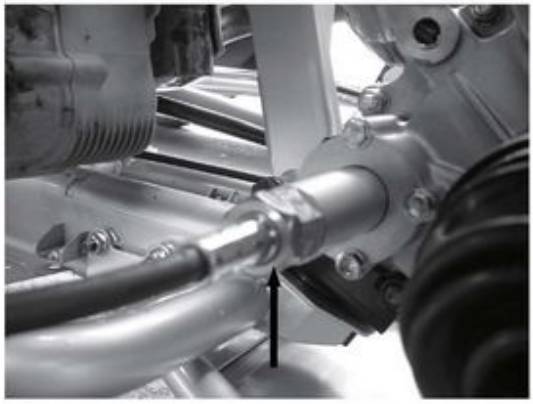

Lock nut for differential control cable

SERVICE

A. COOLING SYSTEM

ATTENTION: Service the cooling system ONLY when the engine is COLD !

Reserve Tank

- Coolant level inspection:
  1. Check the coolant level of Reserve Tank. If the level is under the lower line, fill it to the upper line.
  2. Recommended coolant: (Lowest proportion must be over 50% coolant) + (distilled water).

- Coolant replacement: (at least every 2 years)
  1. Coolant draining:
     a. Remove the engine drain bolt.
     b. Remove the inlet hose of front radiator (right lower), or the drain cap of radiator (left lower).
     c. Reinstall the drain bolt and inlet hose of front radiator.

DRAINING:

inlet hose of radiator

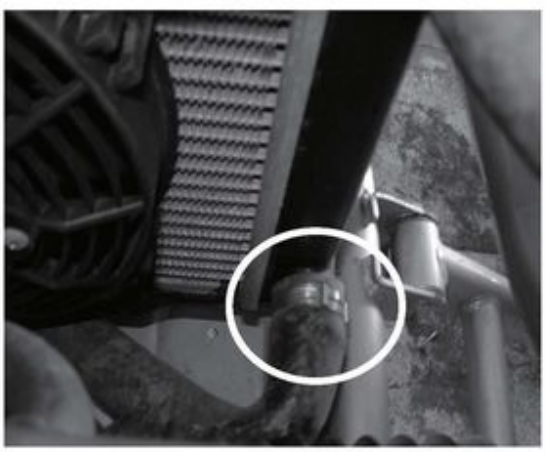

Engine coolant drain bolt

FILLING:

2. Raise the front vehicle about 150cm higher than the rear vehicle, loosen the ventilation screw of engine cylinder head.
3. open the cap of radiator & reserve tank.
4. Fill the radiator with specified ratio coolant from the radiator cap when the engine is stopped.
5. when the coolant flow out from the ventilation screw , start the engine and keep in idle speed, refill the coolant until the flow is steady and without any bubbles. Lock the ventilation screw.
6. The total coolant capacity(step#2 & #3) is about **3,500** C.C.

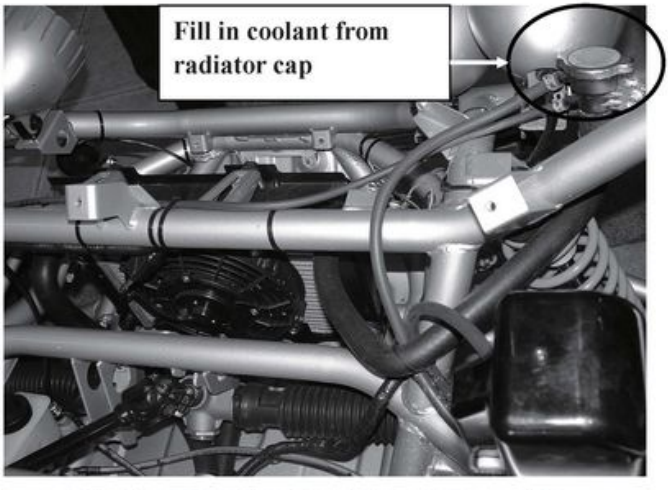

B. SERVICE AIR CLEANER ELEMENT

1. Service air cleaner every 1,000 kilometers (approximately 2 months).

ATTENTION: You must service it more often when used under dusty conditions, even inspect it every time after usage!

2. Procedure
   - Loosen the 9 fixing screws.
   - Remove cleaner cover.
   - Remove air cleaner element.
   - Clean the sponge by compressed air.
   - Check the blow-by and condensate exhaust pipe and empty it, if full.

3. Cleaning
   - The element of BR-500 is sponge type, that means you can maintain it to multiple usage.

   a. Wash the sponge with water and shampoo.
   b. Dry up by small compressed air jets and a clean cloth.
   c. Soak with 50% fuel and oil SELENIA AIR FILTER OIL mixture.
   d. Let the filtering element drip and press it with your hands without squeezing.
   e. Replace the filtering element.

   Caution: Never let the engine run without air filter. This would cause an excessive wear of cylinder and piston and would damage the injector.

4. Model photo

Outside cover

Sponge element

C. SERVICE ENGINE OIL AND FILTER

➢ **Replace engine oil:** You must change the oil in the crankcase after the first 1,000 kilometers of use thereafter. That will insure proper lubrication of internal parts and prevent costly repairs due to excessive wear.

1. Start the engine, and warm it up about 3 minutes, and then stop it.
2. After about 5 minutes, remove the oil gauge cap, drain the engine oil.
3. Remove and clean the net filter of the draining bolt.
4. Fill in approx. 1,700 cc of engine oil when replace the oil filter together.

(Fill in only 1,500 cc of engine oil when without replacing the oil filter.)

5. Repeat step #1~2, check the oil gauge, make sure the oil level is between the MAX and MIN.
6. Check oil level before each use of kart or after each 1,000 kilometers of operation. Add oil to bring up to proper level. Do not mix various grades of oil.

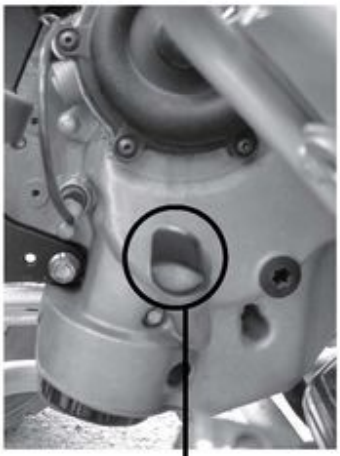

➢ **Replace engine oil filter:**

1. Use a filter tape wrench to remove the oil filter.
2. Make sure that the O-rings of pre-filter and oil filter are not worn.
3. Lubricate the O-ring and replace net filter and oil filter; tighten with below torque:
   - Engine oil draining bolt: 24~30 N-m
   - Oil filter: 12~16 N-m
4. Replace a new oil filter after lubricating the O-ring, then screw it up to touching the gasket and tighten further the recommended torque.

D. SERVICE GEAR OIL

- Please change the oil after first 1,000km ride, then it is recommended to change the gear oil every 6,000km.
- Regular changing volume : 250 c.c. (SAE 140 TUTELA ZC 90)

Fill-in Cap

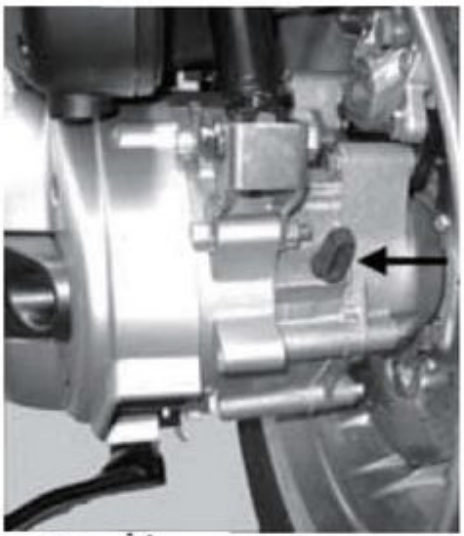

Oil draining bolt

E. SERVICE AIR CLEANER ASSEMBLY

On the occasion to replace the air cleaner assembly.

1. dismantle the rear rack first to make the air cleaner body could be removed or installed easily.
2. Pay attention to the front housing of air cleaner assy., it shall be engaged to the engine case bracket properly, then lock the screw.

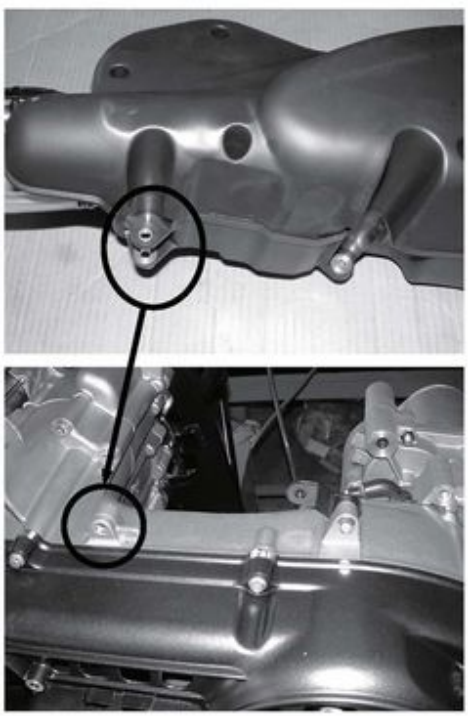

F. SERVICE DRAINING THE PCV TUBE OIL

1. The oil of Positive Crankcase Ventilation(PCV) accumulates in the air cleaner PCV tube as shown.
2. Take off the plug to drain the oil about per 500 kilometers before the oil is full of the whole PCV tube, otherwise the engine performance will be greatly reduced.
3. After draining the oil, be sure install the plug and clip back well.

G. SERVICE CLEANING THE AIR INLET of CVT TRANSMISSION

1. Continuous Variable Transmission (CVT) sucks fresh air to reduce the high temperature inside.
2. To have longer life for the CVT parts, such as V-belt, you have to maintain the air inlet. So we recommended you to clean the inlet about per 1,000 kilometers.
3. Even clean it every time after using in off road environment.

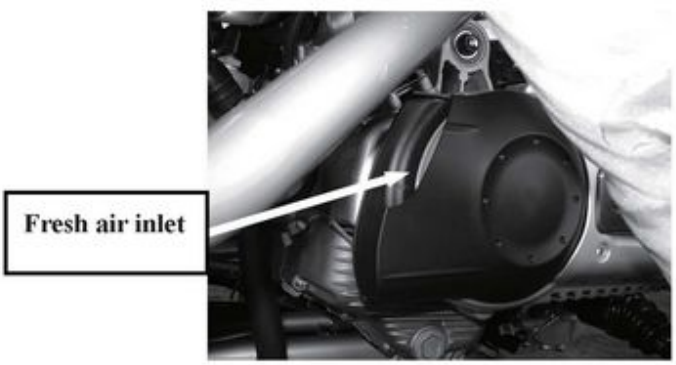

H. CLEANING THE INSIDE of CVT TRANSMISSION AND CHECK PARTS

- this vehicle is equipped with Continuous Various Transmission(CVT) mechanisms. The parts inside are all consuming parts, that means you have to pay attention to service them.
- Clean the dust, powder… etc. inside the CVT periodically about 2000~3000 kilometers.
- Check the V-belt, if there is any crack occurs, replace it.
- Check the o-ring as right figure shown, lubricate it or replace it when it worn- out .

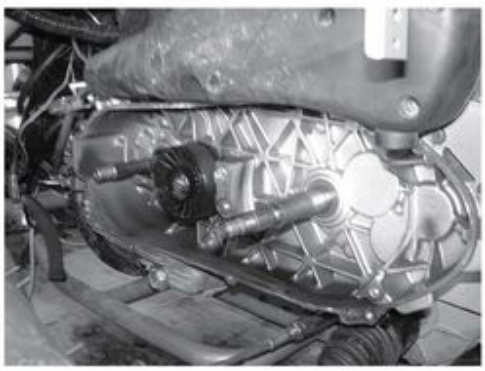

I. SERVICE THE GASKET of MUFFLER

1. There are 2 sections of the muffler, and they are coupled by a clamp as shown:
2. There is a gasket inside the clamp to avoid leakage, be sure to replace it when leakage occurs.

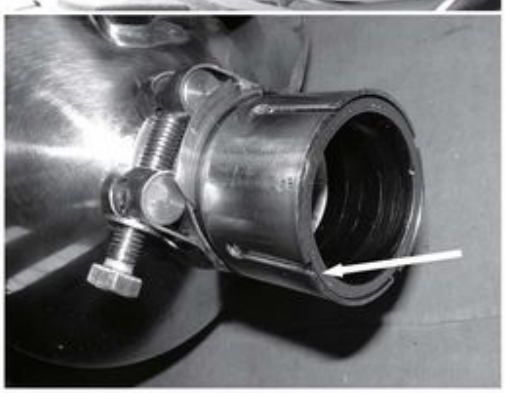

J. Spark Plug

1. Remove the spark plug and inspect it each time you change the oil. (Use a spark plug wrench) The electrodes should be kept clean and free of carbon. The presence of carbon or excess oil will greatly reduce proper engine performance. If possible, check the spark plug gap (area between electrodes) using a wire feeler gauge.

   This specification is 0.7~0.8mm.

2. Before installing spark plug coat threads lightly with graphite grease if possible, to ensure easy removal next time the spark plug needs inspection.
3. It is advisable to replace the spark plug at least once a year to insure easy starting and good engine performance.

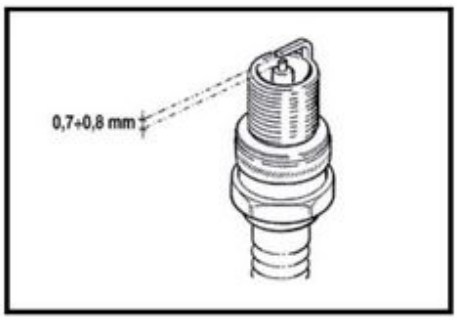

K. Idle Adjustment

Never make unnecessary adjustments. The factory recommended settings are correct for most Applications. Meanwhile this kart's idle is controlled by EMS(Electric Management System), you don't have to adjust the idle speed. But however you still have to make sure the throttle cable clearance as follows:

1. Make sure the front section is well nut locked as right figure shown, adjust the clearance (~5mm) by moving the nut if necessary.
2. Make sure the rear section is well nut locked as below figure shown, adjust the clearance by moving the nut if necessary.
3. The recommended idle speed is 1,600RPM (BR-500), make sure the throttle cable clearance and can snap back suddenly after release for your safety !

- **The "throttle" pedal stopped by this bolt(a)**
- **The throttle stopped by a bracket(b)**
- **Ensure reach "a" before reach "b"**

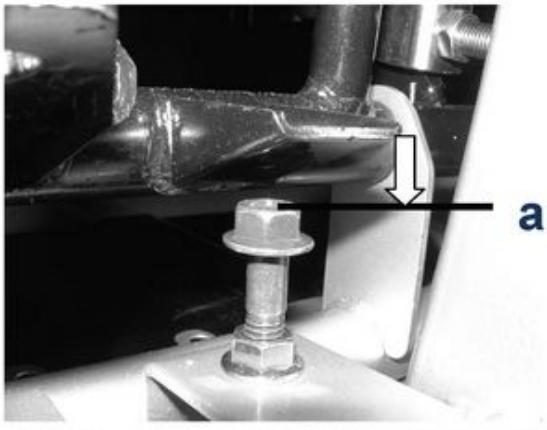

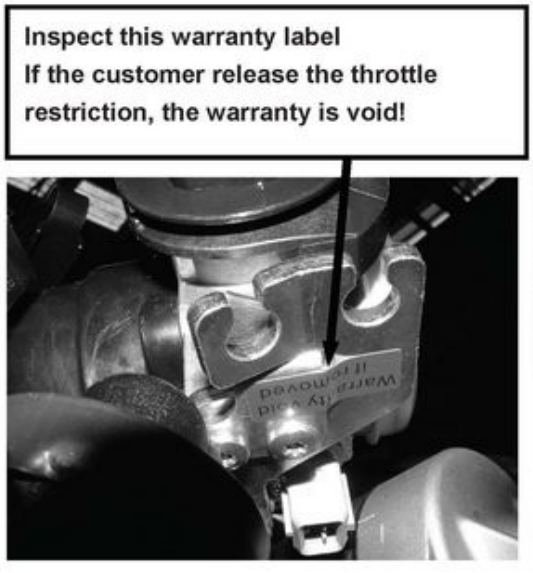

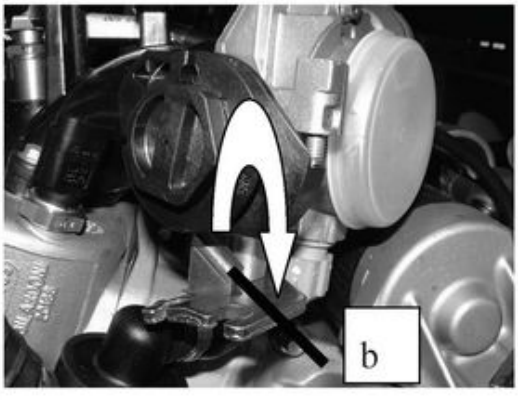

L. Cleaning Instructions

Keep your kart clean. With a clean rag, wipe off and dirt and oil from around controls. Wipe off any spilled fuel and oil. Keep the engine clean of foreign object and be sure to check that air intake fan is free of debris for proper cooling.

M. Kart Lubrication

Lubricate vehicle every 90 days of use.

N. Driving shaft Lubrication

1. To increase driving shaft life, it should be lubricated with grease inside the rubber.
2. Check the rubber, make sure there is no any grease comes out from it . If the rubber is wear defect, contact your dealer to replace a new one.

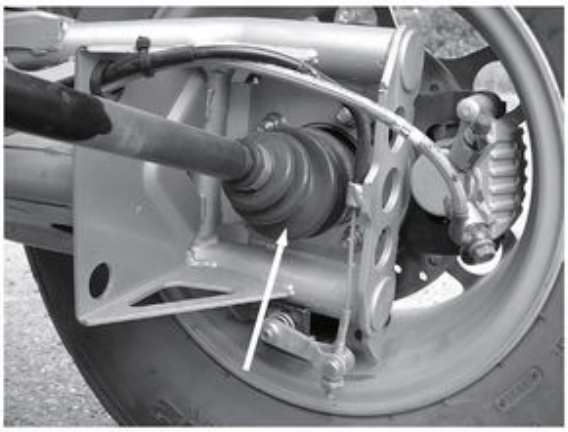

O. Adjustment of Front And Rear Shock Absorber

The absorbers can be adjusted depending on the loading conditions.

1. Use a round nut wrench to loosen the lower nut.
2. the tension of shock spring will increase as you screw the upper nut to right, decrease as you Screw to the left.
3. Tighten the lower nut finally.

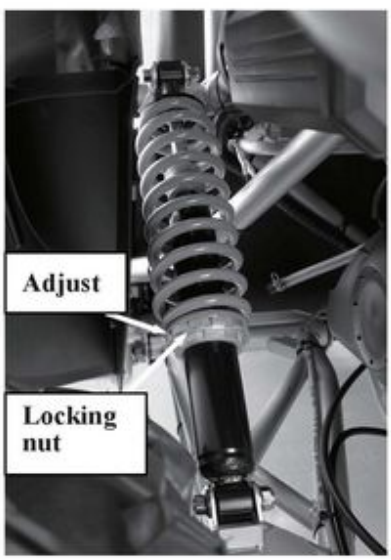

P. Transmission Gear box

Replace the oil per 6,000 kilometers, with about 750cc oil SAE 80W/90 of higher quality than API GL3 specification.

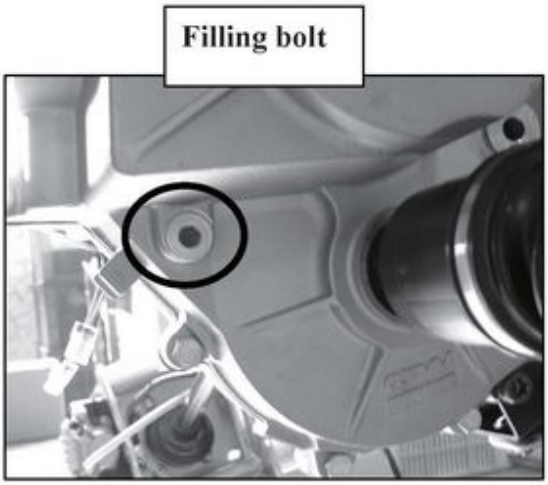

Q. Storage Instruction

In the event your kart is not to be operated for a period in excess of 30 days or at the end of each driving season prepare of storage as Follows:

1. Drain fuel tank and fuel pipes by allowing engine to run out of fuel, and use a fuel stabilizer.
2. Lubricate engine cylinder by removing the air cleaner, then spray engine fogging oil though the carburetor until motor dies.
3. Do not save or store gasoline over winter. Using old gasoline, which has deteriorated from storage, will cause hard starting and affect engine performance.

A. Front Wheel Replacement

Do not disassemble the castle nuts when you replace the front wheels.
It is only necessary to remove the 4 lug nuts to remove the wheel.
(See Figure)Tighten the nuts after replacing the wheels.

B. Rear Wheel Replacement

Do not disassemble the castle nuts when you replace the rear wheels.
It is only necessary to remove the 4 lug nuts to remove the wheel.

C. Front Wheel A1ignment

1. The front wheels should be "toe-in" from 6~10mm. To check for alignment, measure distance A and B between the centerline (CL) of the wheels. The proper toe-in dimension A should be 6~10mm greater than dimension B.
2. To adjust the alignments, loosen the lock nuts on both sides of Front Tie Rods. To make dimension B smaller, turn the rod to the left. Adjust the rod to right direction to make dimension B larger. After adjusting to the desired length, tighten the lock nut against the rod end.
3. Recheck the dimensions for proper alignment.

Right tie rod

Left tie rod

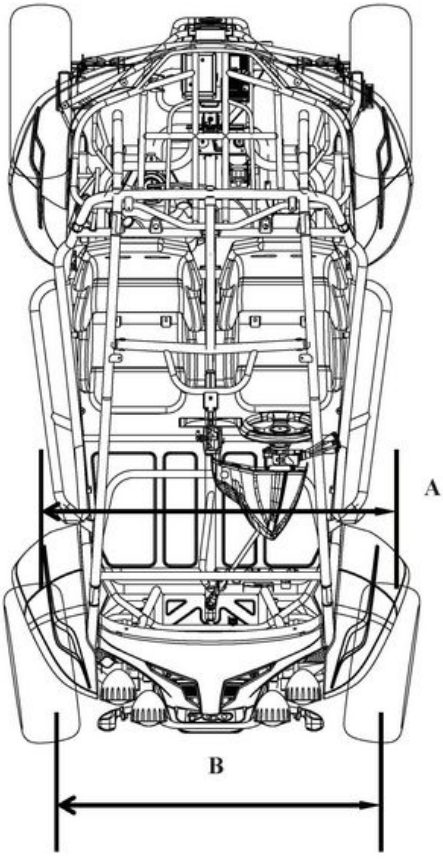

D. Rear swing arms

1. check the bolt and nut of rear swing arm, make sure they are well locked after usage.
   - The lock torque is 10~11 kg-m.
2. Check the clearance between spacer tube and automatic oiling bush, if clearance(each side) is bigger than 0.15mm, replace the bush.
3. Install the bush to the swing arm, apply some grease on the inner diameter of the bush before inserting the spacer tube.

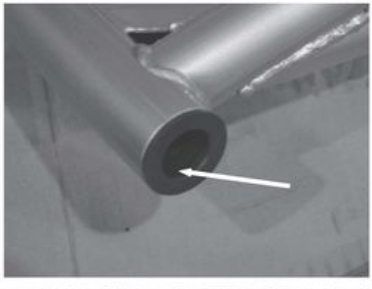

E. Front A arms

1. before install A arms to chassis, you have to lock the bolts of front absorber first.
   Lock torque: 4.0~5.0 kg-m
2. Then lock the bolts of A arms with:
   Lock torque: 4.0~4.5 kg-m
3. Check the bush, make sure there is no any crack occurs.
4. Check the clip of upper A-arm, don't miss it.

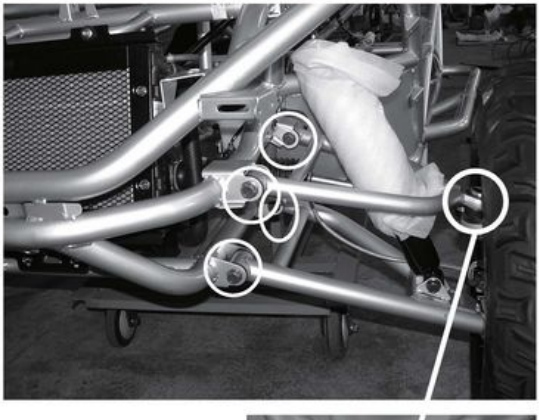

F. Steering mechanisms

1. the steering wheel control the vehicle moving direction, turn clockwise to right direction, and turn counterclockwise to left direction.
2. Check the rubber of turn mechanism assembly, if worn-out or grease leaking out, that will make you harder to operate turning.
3. Check the tie-rod of turn mechanism assembly, lock tight the cotter hexagon nut with:
   - Locking torque: 3.5~4.0 kg-m

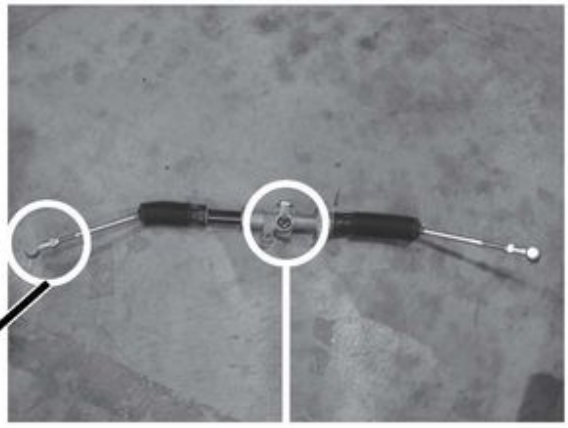

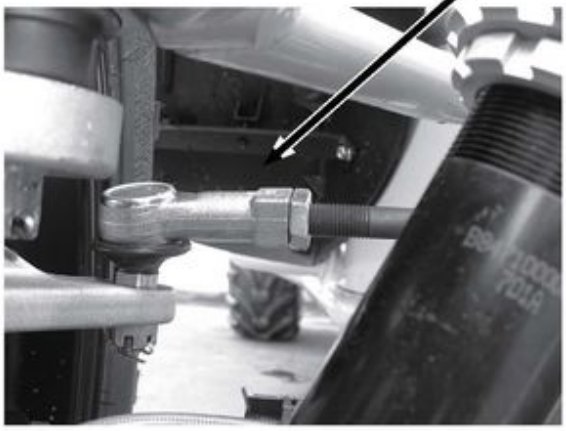

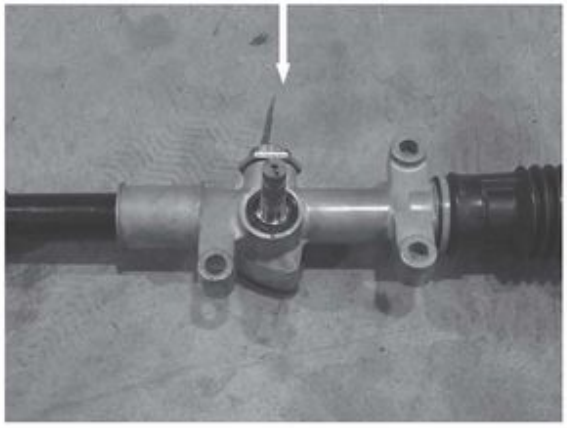

How to assembly the steering mechanism

1. Turn the steering wheel to middle position, and lock it with anti-thief locker.
2. Assembly the upper connecting shaft (universal joint) to well engaged to the spline of steering shaft, lock it with:
   - Locking torque:2.0~3.0 kg-m

3. Check the marking line of turn mechanism assy., make sure it shall align to the center line of the vehicle.

Attention: this making line might disappear after using a period of time. So before dismantling the lower connecting shaft from the turn mechanism assy., you might **make a new making line** for after assemble purpose!

4. Assembly the lower connecting shaft (universal joint) to well engaged to the spline of steering shaft, lock it with:
   - Locking torque:2.0~3.0 kg-m

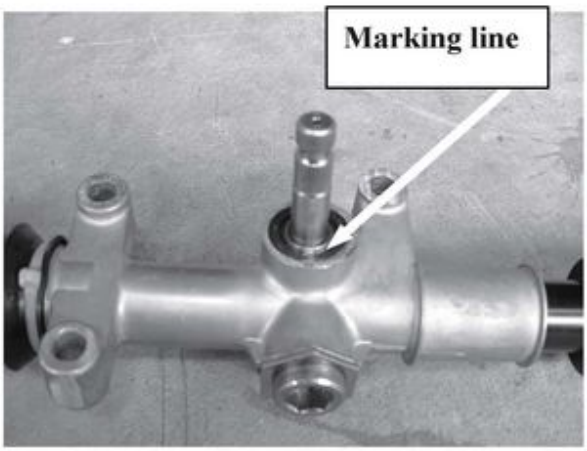

In order to achieve safe riding, good performance and reduce pollution, please execute the following recommended maintenance table base upon average driving condition. Driving in unusual dusty areas, require more frequent servicing.

1. BR-500 periodical maintenance table:

Item	Checking Content	MONTHS/DISTANCE(IN KM)FOR CHECKING						
		1 or 1000 km	6 or 3000k	12 or 6000k	9 or 9000k	24 or 12000k	36 or 18000k	48 or 24000k
* Engine oil level check	Check when engine is cold	I	Inspect it per 1,000km					
* Engine oil	Replace 1,500cc when without replace Oil filter. Replace 1,700cc when replace Oil filter together	R	Replace it per 3,000km					
* Oil Filter	Replace	R	Replace it per 6,000km					
* Air filter	Replace it if required	R	Replace it per 1,000km					
* Engine Gear oil	Replace with 250 cc	R		R		R	R	R
* Transmission Gear oil	Replace with 750 cc	R		R		R	R	R
Brake performance	Leaking and function check	I	I	I	I	I	I	I
Brake oil, disk, pad, hose, master cylinder	Leaking and worn-out check or replace it if necessary	I	I	I	I	I	I	I
Cooling water, radiator, hose	Leaking check and clean the radiator if necessary	I	I	I	I	I	I	I
* Clutch linings	Check or replace it if necessary		I	I	I	I	I	I
Tires	Worn-out check or replace it if necessary		I	I	I	I	I	I
* Wheel bearing	Fasten tightly if loosen		I	I	I	I	I	I
* Driving CV joint	Lubricate & check the slack	I	I	C,A,L	I	C,A,L	I	C,A,L
* Chassis suspension arm, spindle	Check looseness. Add grease if required	I	I	C,A,L	I	C,A,L	I	C,A,L
* Steering joint & rod	Check looseness. Adjust it if required			I		I		I
* Absorber	Leaking and function check	I		I		I		I
Parking	Function check or replace it if required	I	I	I	I	I	I	I
Nuts, bolts, fasteners	Tighten it if required	I	I	I	I	I	I	I
Battery	Recharge the battery it required. Clear the poles.	I	I	I	I	I	I	I
* Valve gap	When engine is cool : BR-500: 0.15mm for IN 0.15mm for EX	Check and Adjust it when necessary						
Spark plug	Clear or replace if required		I	I	I	I	I	I
* V belt	Worn out check or replace if necessary.		I	I	P	R	I	R
* Fuel feeding system	Crack and blockage check. Replace it if necessary.			I		I		I
* Engine idle speed	1550±50 rpm	A	A	A	A	A	A	A
* EMS check	Check and reset the system referring to EMS inspection	A	A	A	A	A	A	A

A: adjust C: clean I: inspect, or replace if necessary L: lubricate R: replace

1. Items with "*" mark indicate our recommendation to have it done by PGO dealer.
2. "P" denotes that function check or replace it when the engine performance reduces significantly.

NOTE 1：

The engine oil shall be changed completely after run-in period 1,000 km or one month later. This can make sure the engine runs smoothly.

NOTE 2：

The exchange of brake fluid

1. After disassembling of brake main cylinder or caliper, do change the new fluid.
2. Check the fluid level often, refill if necessary.
3. Change the oil seal of main cylinder and caliper every two years.
4. Change the brake fluid hose every four years.

NOTE 3： water-cooled engine

1. Clean the filter of cooling fan per 3,000 kms.
2. Check the clamping and hoses of radiator system initially 1,000 kms and per 10,000kms for anti-leaking proof.
3. Replace the engine coolant every two years.

Service Information:

Item	Characteristics	Descriptions
1	Model	**BR-500**
2	Engine Type	**Single-cylinder, four-stroke engine**
3	Bore	**92 mm**
4	Stroke	**69 mm**
5	Piston displacement	**460 c.c.**
6	Compression ratio	**10.5 : 1**
7	Timing system	**Single head camshaft, 4 valves**
8	Valve clearance	
	intake	**0.15 mm when cold**
	exhaust	**0.15 mm when cold**
9	Engine idle speed	**1600 rpm**
10	Air filter	**sponge**
11	Ignition type	**Inductive, high efficiency, integrated with injection variable advance and separate HV coil**
12	Spark plug	NGK CR7EKB CHAMPION RG6YC
13	Start-up system	**Electric starter motor with free wheel**
14	Generator	**In three-phase alternating current.**
15	Battery	**MF 12V-14Ah**
16	Fuses	**Chip type; 1A*1/ 3A*2/ 10A*2/ 15A*3/ 25A*1**
17	Lubrication	**By trochoidal pump(inside the crankcase), pressure adjustment by-pass and oil filter.**
18	Lubrication pressure	**4 bar**
19	Minimum allowed (at 100 degree C)	**0.8 bar**
20	Engine oil	**Synthetic SAE 5W/40 of higher quality than API SJ specification.**
21	Engine reduction Gear oil	**TUTELA ZC 90, ~250 cc replacement**
22	Transmission gear oil	**TUTELA ZC 90, ~750 cc replacement**
23	Power supply	**Electronic ignition with electric fuel pump, throttle 38 mm and single injector.**
24	Cooling system	**Liquid, by engine-motored pump, 3-way thermostat electric fan.**
25	Coolant	**Anti-freezing fluid base on monoethylene glycol, CUNA NC 956-16**
26	Tire: Front Rear	**25*8-12** **27*10-12**
27	Transmission reduction: Engine: 2nd gear box: 3rd gear box "L" : 3rd gear box "H" 4th reverse gear box:	 **1 (direct)** **50/20 * 47/14** **2.439** **1.594** **2.593**

ELECTRIC PARTS

1.Electric Control Unit(ECU)

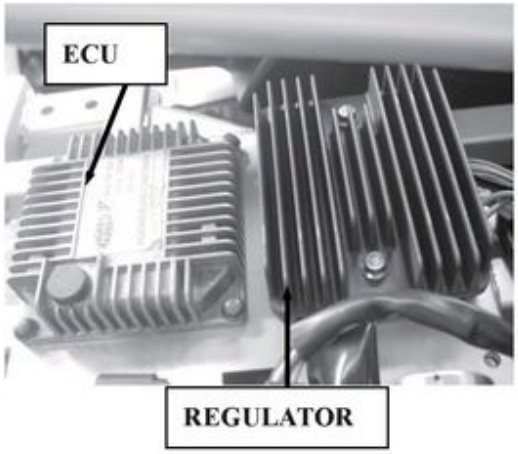

2.Fuel pump

- the fuel pipe shall be well engaged and clamped, check if there is fuel leakage always.
- Replace the fuel filter periodically.
- Make sure the fuel gauge can move freely up and down.
- The full capacity of fuel tank is about 20 liters, whenever the fuel indicator twinkling (only about 6 liters left in fuel tank), you have to fill the fuel as soon as possible. Otherwise it might damage the fuel pump for long time lacking fuel.

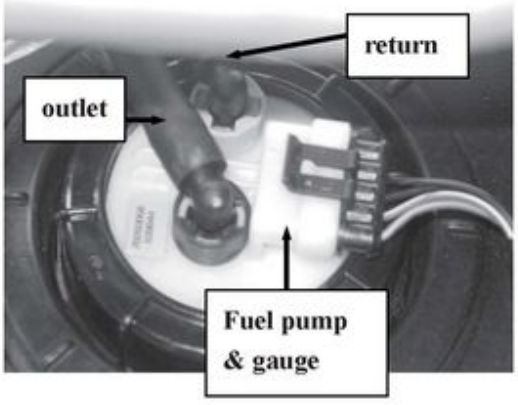

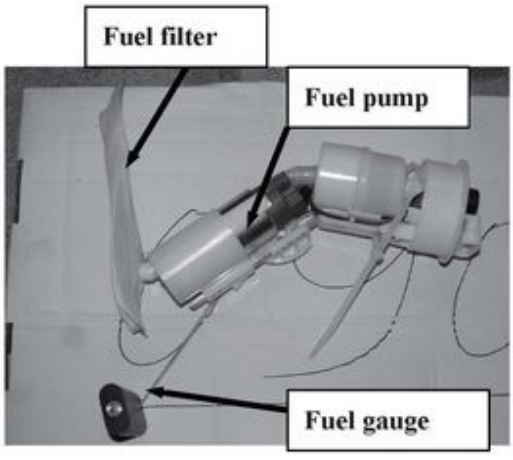

3.Ignition coil

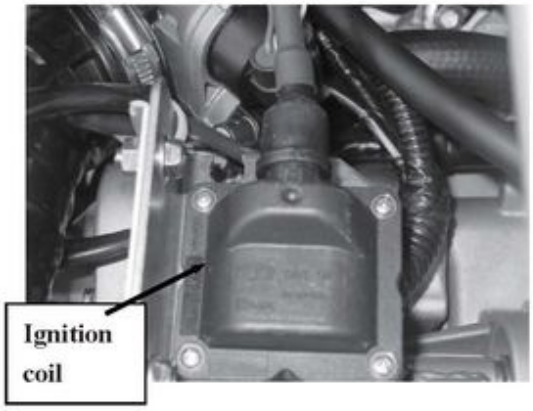

4.Neutral sensor

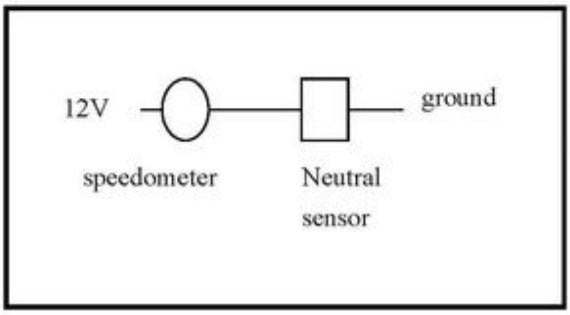

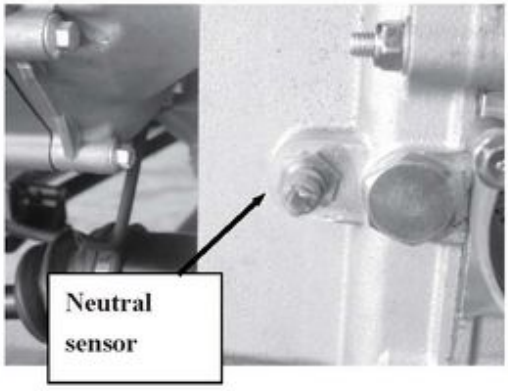

5.Oil pressure sensor

when the oil pressure is enough, the bulb of speedometer will distinguish.

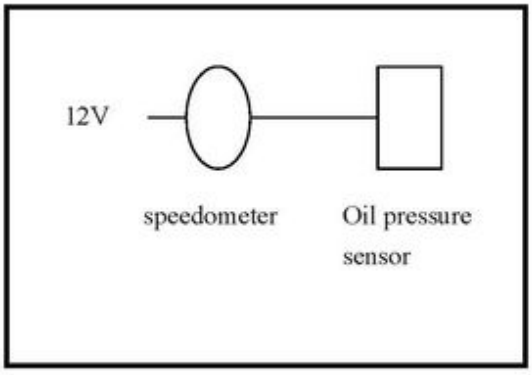

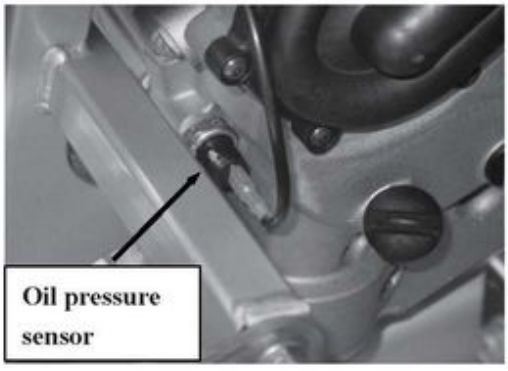

6.Gear shift controller

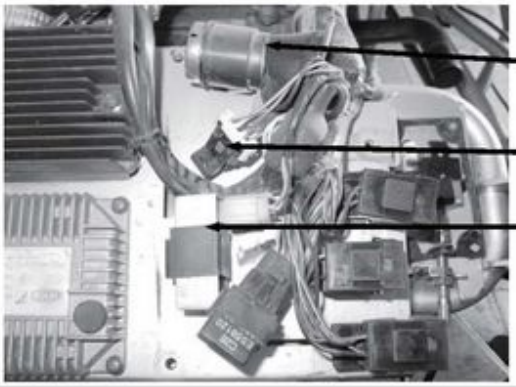

Only when engine speed between 1000~3000 rpm & push the brake pedal, that controller permit the solenoid valve act!

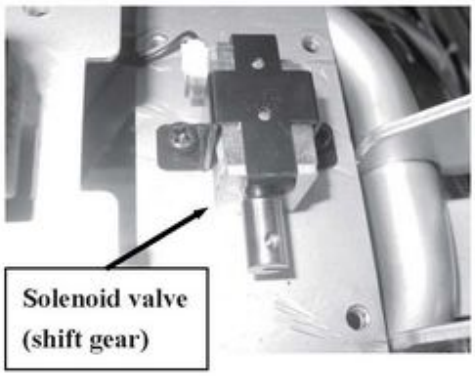

Attention: it's necessary to adjust the solenoid cable to make gear shifting easier for a period of operating the vehicle.

- **Right illustrated is the related circuit:**

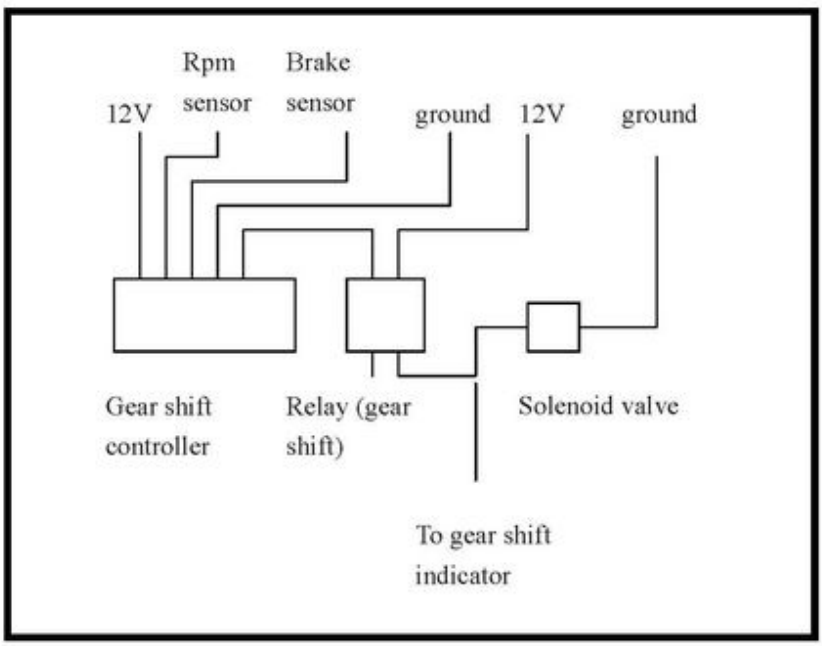

7.Relays:

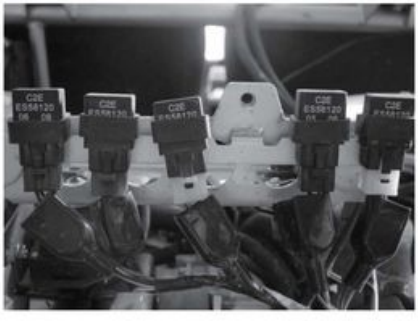

Red: main relay
Blue: high beam relay
White: low beam relay
Black: cooling fan relay
White: fuel pump relay

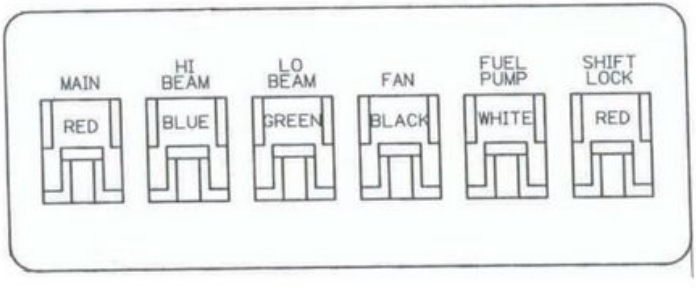

- **check the relays**

a. Find the control coil by measuring the resistance (about 115 ohms).

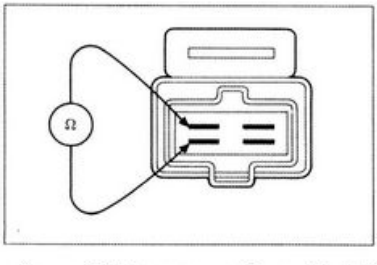

b. Connect green/white cable to positive pole of battery, connect black cable of negative pole of battery, It means starter is function well if above connection and both Red Black cable of staring motor have currency passing through.

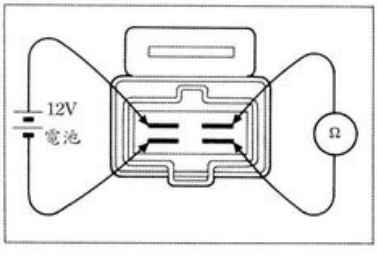

8.Headlamps

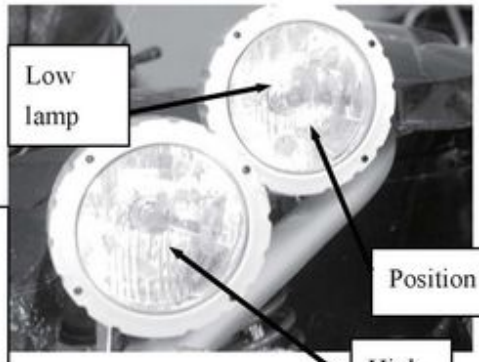

When switch to low beam, only low lamp is ON. When switch to high beam, both high lamp & position lamp are ON.

- adjusting the height: loosen the bolt under the headlamp, adjust the height to your target, then lock the bolt.

9.Fuses:

➢ the recommended fuses are:

- 1A*1
- 3A*2
- 10A*2
- 15A*3
- 25A*1

NOTE: when replacing the fuses, always use the specification as original manufactured.

➢ right is the individual fuse and related parts indication:

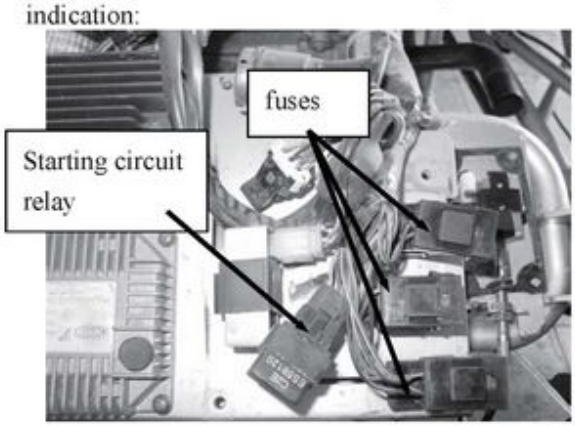

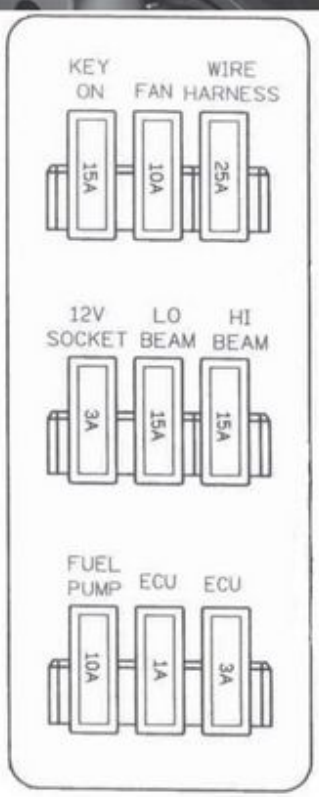

10.Engine Management System(EMS) units

12V power supply units:

- injector
- Air temperature sensor
- Throttle position sensor
- Coolant sensor
- Fuel pump

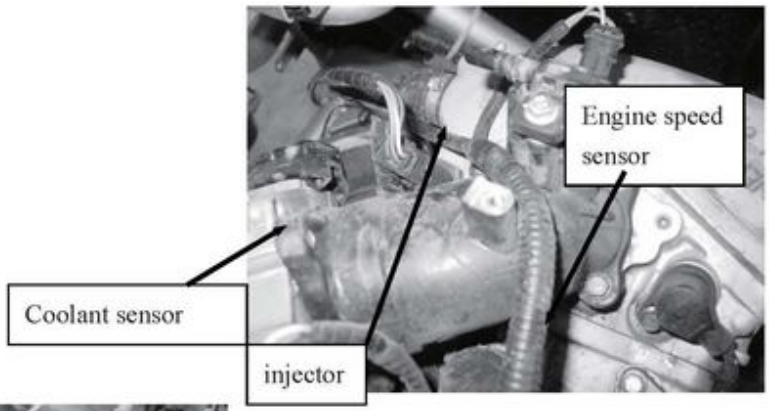

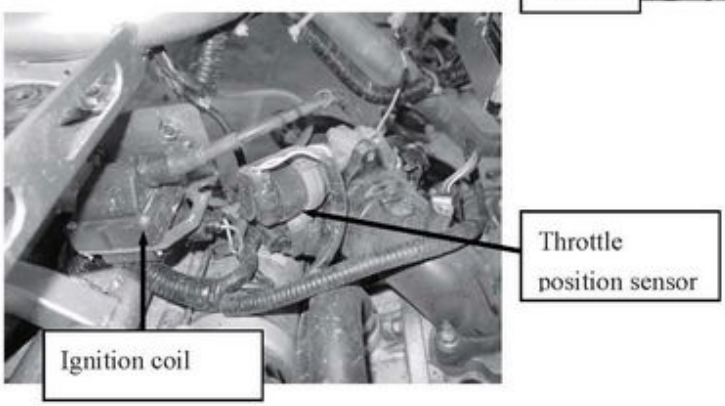

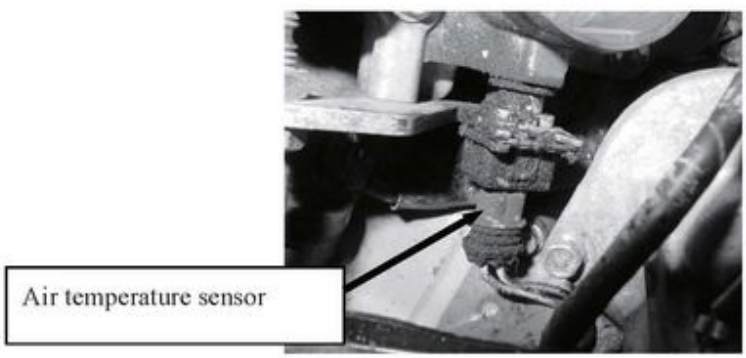

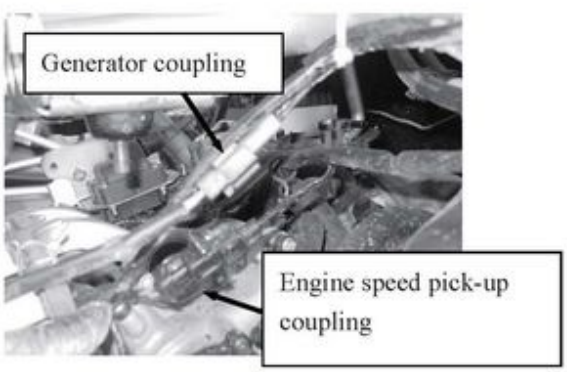

11.Brake sensor

Brake sensor conducts when brake oil pressure is enough !

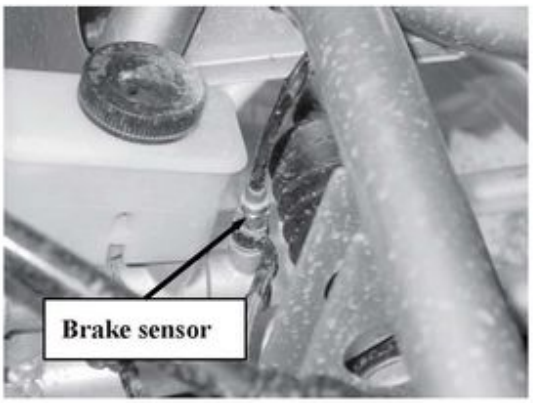

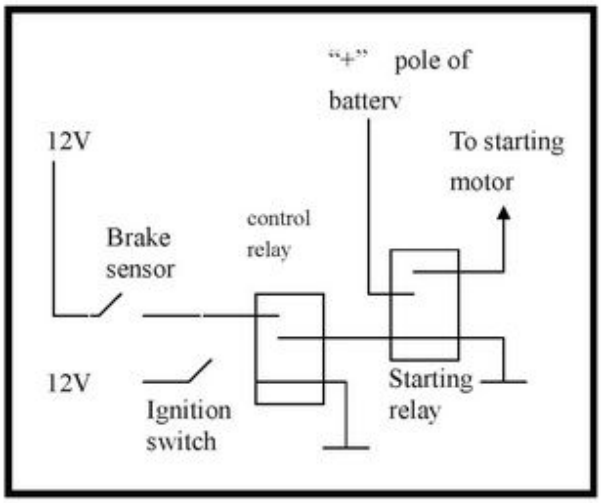

12.Cooling fan control

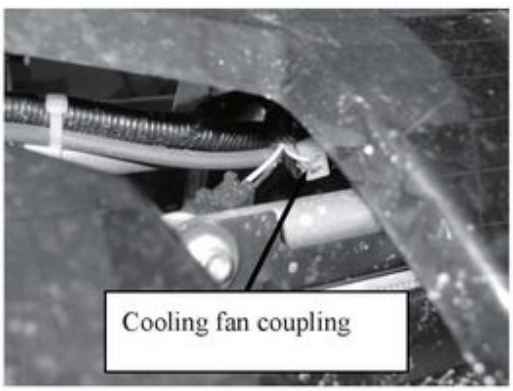

Cooling fan coupling locates above the radiator;
Cooling fan is controlled by ECU: 100℃ON；95℃OFF

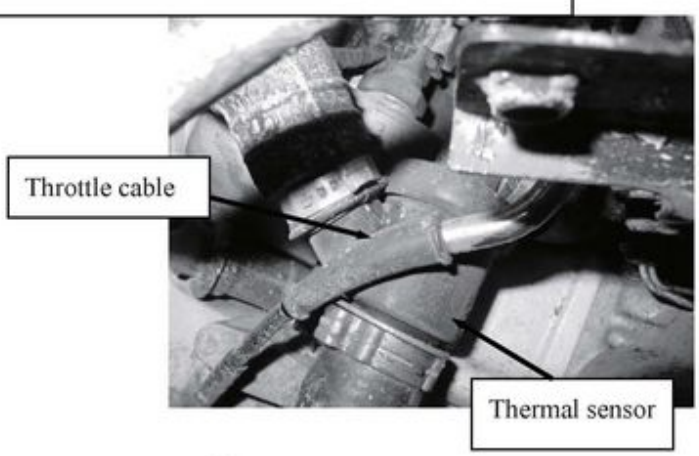

13.Starting control units

1.the battery is in "MF"(Maintenance Free) type, so it won't be necessary to check or refill the liquid. If the liquid is leaking, please contact with your dealer A.S.A.P.

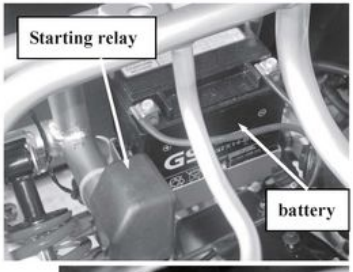

Attention: disconnect the battery wires when storage period is longer than 1 month!

Disconnect the couple for long time storage to save battery power

2.Recharge

•Connection procedure:

connect the positive cable(+) of the negative cable(+) of the battery, and the negative cable(-) of the recharge to the negative cable(-) of the battery.

•Recharging currency:

Please recharge (12V) according to the following current and time.

Standard: 1.4A * 5~10Hr or Rapid: 14A *30min

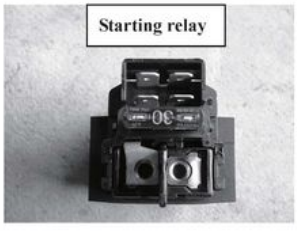

NOTICE:
This battery is totally sealed. Do not remove seal bolt when recharging.

Notice:
•Keep away from fire when recharging.
•The "ON" or "OFF" of recharging. currency must be operated by the switch of recharge.
It will cause spark or explosive if plug or unplug the cable directly.

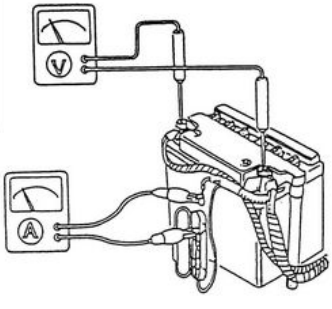

3.Testing the recharging performance

> •This test needs to be done when the battery is fully recharged.
> •This test needs to be done after engine is warm-up.

a. Connect currency meter between red cables and battery, ensure the arrow (net charging direction) of the currency meter towards to the battery "+" pole.

> While testing, the red wire cable must not touch the frame.

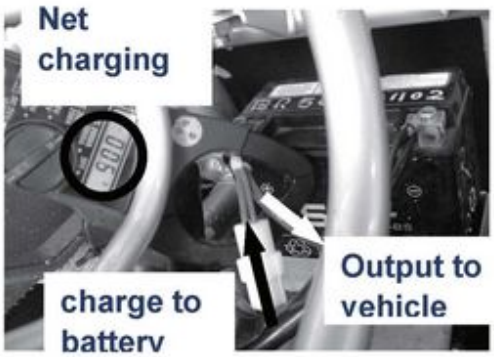

b. Set the head lamp switch at "OFF", engine revolution is at 1,600 rpm while testing. Then increase the rpm slowly. (Assume the battery is fully charged. situation). Measure the voltage & amperes of incoming to battery.

Head Lamp Switch	1,600rpm		3,000prm	
OFF(DAY)	14.5V	0.7A	14.6V	1.0A
ON(NIGHT)	13.5V	0.5A	14.3V	0.7A

c. System layout:

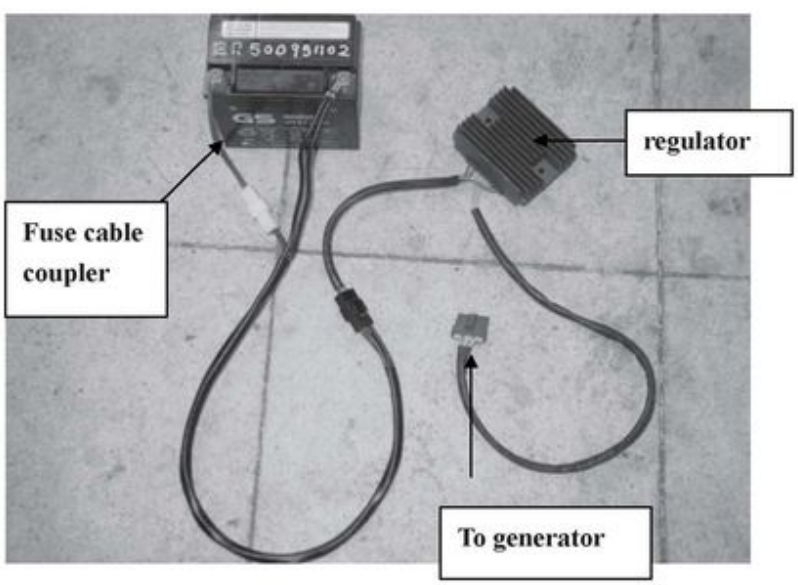

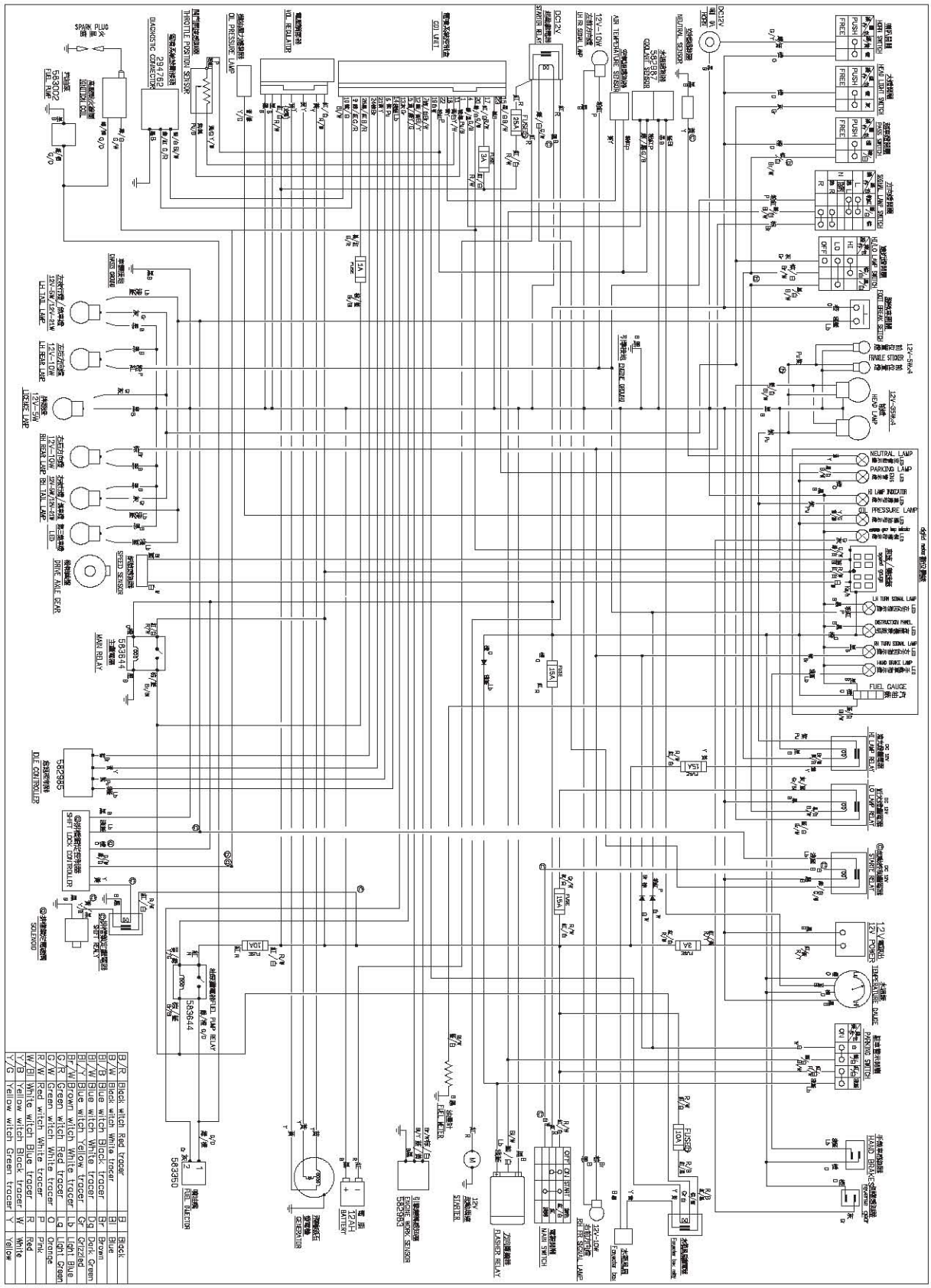
HORN SWITCH
HEAD LIGHT SWITCH
PASS SWITCH
SIGNAL LAMP SWITCH
HEAD LAMP SWITCH
DOOR BREAK SWITCH
12V-5W×4
TURNLE STOKER
12V-35W×4
HEAD LAMP
NEUTRAL LAMP
PARKING LAMP
10 LAMP INDICATOR
PRESSURE LAMP
LH TURN SIGNAL LAMP
DISTRACTION PANEL
RH TURN SIGNAL LAMP
HEAD BRAKE LAMP
FUEL GAUGE
DC 12V
HI LAMP RELAY
DC 12V
LO LAMP RELAY
DC 12V
STARTE RELAY
12V POWER
TEMPERATURE GAUGE
PARKING SWITCH
HAND BRAKE
HAND BRAKE SWITCH
FUSE 10A
FUSE 15A
FUSE 25A
FUSE 3A
FUSE 7.5A
FUSE 20A
FUSE 30A
FUSE 40A
FUSE 50A
FUSE 60A
FUSE 80A
FUSE 100A
FUSE 120A
FUSE 150A
FUSE 200A
FUSE 250A
FUSE 300A
FUSE 400A
FUSE 500A
FUSE 600A
FUSE 800A
FUSE 1000A
FUSE 1200A
FUSE 1500A
FUSE 2000A
FUSE 2500A
FUSE 3000A
FUSE 4000A
FUSE 5000A
FUSE 6000A
FUSE 8000A
FUSE 10000A
FUSE 12000A
FUSE 15000A
FUSE 20000A
FUSE 25000A
FUSE 30000A
FUSE 40000A
FUSE 50000A
FUSE 60000A
FUSE 80000A
FUSE 100000A
FUSE 120000A
FUSE 150000A
FUSE 200000A
FUSE 250000A
FUSE 300000A
FUSE 400000A
FUSE 500000A
FUSE 600000A
FUSE 800000A
FUSE 1000000A
FUSE 1200000A
FUSE 1500000A
FUSE 2000000A
FUSE 2500000A
FUSE 3000000A
FUSE 4000000A
FUSE 5000000A
FUSE 6000000A
FUSE 8000000A
FUSE 10000000A
FUSE 12000000A
FUSE 15000000A
FUSE 20000000A
FUSE 25000000A
FUSE 30000000A
FUSE 40000000A
FUSE 50000000A
FUSE 60000000A
FUSE 80000000A
FUSE 100000000A
FUSE 120000000A
FUSE 150000000A
FUSE 200000000A
FUSE 250000000A
FUSE 300000000A
FUSE 400000000A
FUSE 500000000A
FUSE 600000000A
FUSE 800000000A
FUSE 1000000000A
FUSE 1200000000A
FUSE 1500000000A
FUSE 2000000000A
FUSE 2500000000A
FUSE 3000000000A
FUSE 4000000000A
FUSE 5000000000A
FUSE 6000000000A
FUSE 8000000000A
FUSE 10000000000A
FUSE 12000000000A
FUSE 15000000000A
FUSE 20000000000A
FUSE 25000000000A
FUSE 30000000000A
FUSE 40000000000A
FUSE 50000000000A
FUSE 60000000000A
FUSE 80000000000A
FUSE 100000000000A
FUSE 120000000000A
FUSE 150000000000A
FUSE 200000000000A
FUSE 250000000000A
FUSE 300000000000A
FUSE 400000000000A
FUSE 500000000000A
FUSE 600000000000A
FUSE 800000000000A
FUSE 1000000000000A
FUSE 1200000000000A
FUSE 1500000000000A
FUSE 2000000000000A
FUSE 2500000000000A
FUSE 3000000000000A
FUSE 4000000000000A
FUSE 5000000000000A
FUSE 6000000000000A
FUSE 8000000000000A
FUSE 10000000000000A
FUSE 12000000000000A
FUSE 15000000000000A
FUSE 20000000000000A
FUSE 25000000000000A
FUSE 30000000000000A
FUSE 40000000000000A
FUSE 50000000000000A
FUSE 60000000000000A
FUSE 80000000000000A
FUSE 100000000000000A
FUSE 120000000000000A
FUSE 150000000000000A
FUSE 200000000000000A
FUSE 250000000000000A
FUSE 300000000000000A
FUSE 400000000000000A
FUSE 500000000000000A
FUSE 600000000000000A
FUSE 800000000000000A
FUSE 1000000000000000A
FUSE 1200000000000000A
FUSE 1500000000000000A
FUSE 2000000000000000A
FUSE 2500000000000000A
FUSE 3000000000000000A
FUSE 4000000000000000A
FUSE 5000000000000000A
FUSE 6000000000000000A
FUSE 8000000000000000A
FUSE 10000000000000000A
FUSE 12000000000000000A
FUSE 15000000000000000A
FUSE 20000000000000000A
FUSE 25000000000000000A
FUSE 30000000000000000A
FUSE 40000000000000000A
FUSE 50000000000000000A
FUSE 60000000000000000A
FUSE 80000000000000000A
FUSE 100000000000000000A
FUSE 120000000000000000A
FUSE 150000000000000000A
FUSE 200000000000000000A
FUSE 250000000000000000A
FUSE 300000000000000000A
FUSE 400000000000000000A
FUSE 500000000000000000A
FUSE 600000000000000000A
FUSE 800000000000000000A
FUSE 1000000000000000000A
FUSE 1200000000000000000A
FUSE 1500000000000000000A
FUSE 2000000000000000000A
FUSE 2500000000000000000A
FUSE 3000000000000000000A
FUSE 4000000000000000000A
FUSE 5000000000000000000A
FUSE 6000000000000000000A
FUSE 8000000000000000000A
FUSE 10000000000000000000A
FUSE 12000000000000000000A
FUSE 15000000000000000000A
FUSE 20000000000000000000A
FUSE 25000000000000000000A
FUSE 30000000000000000000A
FUSE 40000000000000000000A
FUSE 50000000000000000000A
FUSE 60000000000000000000A
FUSE 80000000000000000000A
FUSE 100000000000000000000A
FUSE 120000000000000000000A
FUSE 150000000000000000000A
FUSE 200000000000000000000A
FUSE 250000000000000000000A
FUSE 300000000000000000000A
FUSE 400000000000000000000A
FUSE 500000000000000000000A
FUSE 600000000000000000000A
FUSE 800000000000000000000A
FUSE 1000000000000000000000A
FUSE 1200000000000000000000A
FUSE 1500000000000000000000A
FUSE 2000000000000000000000A
FUSE 2500000000000000000000A
FUSE 3000000000000000000000A
FUSE 4000000000000000000000A
FUSE 5000000000000000000000A
FUSE 6000000000000000000000A
FUSE 8000000000000000000000A
FUSE 10000000000000000000000A
FUSE 12000000000000000000000A
FUSE 15000000000000000000000A
FUSE 20000000000000000000000A
FUSE 25000000000000000000000A
FUSE 30000000000000000000000A
FUSE 40000000000000000000000A
FUSE 50000000000000000000000A
FUSE 60000000000000000000000A
FUSE 80000000000000000000000A
FUSE 100000000000000000000000A
FUSE 120000000000000000000000A
FUSE 150000000000000000000000A
FUSE 200000000000000000000000A
FUSE 250000000000000000000000A
FUSE 300000000000000000000000A
FUSE 400000000000000000000000A
FUSE 500000000000000000000000A
FUSE 600000000000000000000000A
FUSE 800000000000000000000000A
FUSE 1000000000000000000000000A
FUSE 1200000000000000000000000A
FUSE 1500000000000000000000000A
FUSE 2000000000000000000000000A
FUSE 2500000000000000000000000A
FUSE 3000000000000000000000000A
FUSE 4000000000000000000000000A
FUSE 5000000000000000000000000A
FUSE 6000000000000000000000000A
FUSE 8000000000000000000000000A
FUSE 10000000000000000000000000A
FUSE 12000000000000000000000000A
FUSE 15000000000000000000000000A
FUSE 20000000000000000000000000A
FUSE 25000000000000000000000000A
FUSE 30000000000000000000000000A
FUSE 40000000000000000000000000A
FUSE 50000000000000000000000000A
FUSE 60000000000000000000000000A
FUSE 80000000000000000000000000A
FUSE 100000000000000000000000000A
FUSE 120000000000000000000000000A
FUSE 150000000000000000000000000A
FUSE 200000000000000000000000000A
FUSE 250000000000000000000000000A
FUSE 300000000000000000000000000A
FUSE 400000000000000000000000000A
FUSE 500000000000000000000000000A
FUSE 600000000000000000000000000A
FUSE 800000000000000000000000000A
FUSE 1000000000000000000000000000A
FUSE 1200000000000000000000000000A
FUSE 1500000000000000000000000000A
FUSE 2000000000000000000000000000A
FUSE 2500000000000000000000000000A
FUSE 3000000000000000000000000000A
FUSE 4000000000000000000000000000A
FUSE 5000000000000000000000000000A
FUSE 6000000000000000000000000000A
FUSE 8000000000000000000000000000A
FUSE 10000000000000000000000000000A
FUSE 12000000000000000000000000000A
FUSE 15000000000000000000000000000A
FUSE 20000000000000000000000000000A
FUSE 25000000000000000000000000000A
FUSE 30000000000000000000000000000A
FUSE 40000000000000000000000000000A
FUSE 50000000000000000000000000000A
FUSE 60000000000000000000000000000A
FUSE 80000000000000000000000000000A
FUSE 100000000000000000000000000000A
FUSE 120000000000000000000000000000A
FUSE 150000000000000000000000000000A
FUSE 200000000000000000000000000000A
FUSE 250000000000000000000000000000A
FUSE 300000000000000000000000000000A
FUSE 400000000000000000000000000000A
FUSE 500000000000000000000000000000A
FUSE 600000000000000000000000000000A
FUSE 800000000000000000000000000000A
FUSE 1000000000000000000000000000000A
FUSE 1200000000000000000000000000000A
FUSE 1500000000000000000000000000000A
FUSE 2000000000000000000000000000000A
FUSE 2500000000000000000000000000000A
FUSE 3000000000000000000000000000000A
FUSE 4000000000000000000000000000000A
FUSE 5000000000000000000000000000000A
FUSE 6000000000000000000000000000000A
FUSE 8000000000000000000000000000000A
FUSE 10000000000000000000000000000000A
FUSE 12000000000000000000000000000000A
FUSE 15000000000000000000000000000000A
FUSE 20000000000000000000000000000000A
FUSE 25000000000000000000000000000000A
FUSE 30000000000000000000000000000000A
FUSE 40000000000000000000000000000000A
FUSE 50000000000000000000000000000000A
FUSE 60000000000000000000000000000000A
FUSE 80000000000000000000000000000000A
FUSE 100000000000000000000000000000000A
FUSE 120000000000000000000000000000000A
FUSE 150000000000000000000000000000000A
FUSE 200000000000000000000000000000000A
FUSE 250000000000000000000000000000000A
FUSE 300000000000000000000000000000000A
FUSE 400000000000000000000000000000000A
FUSE 500000000000000000000000000000000A
FUSE 600000000000000000000000000000000A
FUSE 800000000000000000000000000000000A
FUSE 1000000000000000000000000000000000A
FUSE 1200000000000000000000000000000000A
FUSE 1500000000000000000000000000000000A
FUSE 2000000000000000000000000000000000A
FUSE 2500000000000000000000000000000000A
FUSE 3000000000000000000000000000000000A
FUSE 4000000000000000000000000000000000A
FUSE 5000000000000000000000000000000000A
FUSE 6000000000000000000000000000000000A
FUSE 8000000000000000000000000000000000A
FUSE 10000000000000000000000000000000000A
FUSE 12000000000000000000000000000000000A
FUSE 15000000000000000000000000000000000A
FUSE 20000000000000000000000000000000000A
FUSE 25000000000000000000000000000000000A
FUSE 30000000000000000000000000000000000A
FUSE 40000000000000000000000000000000000A
FUSE 50000000000000000000000000000000000A
FUSE 60000000000000000000000000000000000A
FUSE 80000000000000000000000000000000000A
FUSE 100000000000000000000000000000000000A
FUSE 120000000000000000000000000000000000A
FUSE 150000000000000000000000000000000000A
FUSE 200000000000000000000000000000000000A
FUSE 250000000000000000000000000000000000A
FUSE 300000000000000000000000000000000000A
FUSE 400000000000000000000000000000000000A
FUSE 500000000000000000000000000000000000A
FUSE 600000000000000000000000000000000000A
FUSE 800000000000000000000000000000000000A
FUSE 1000000000000000000000000000000000000A
FUSE 1200000000000000000000000000000000000A
FUSE 1500000000000000000000000000000000000A
FUSE 2000000000000000000000000000000000000A
FUSE 2500000000000000000000000000000000000A
FUSE 3000000000000000000000000000000000000A
FUSE 4000000000000000000000000000000000000A
FUSE 5000000000000000000000000000000000000A
FUSE 6000000000000000000000000000000000000A
FUSE 8000000000000000000000000000000000000A
FUSE 10000000000000000000000000000000000000A
FUSE 12000000000000000000000000000000000000A
FUSE 15000000000000000000000000000000000000A
FUSE 20000000000000000000000000000000000000A
FUSE 25000000000000000000000000000000000000A
FUSE 30000000000000000000000000000000000000A
FUSE 40000000000000000000000000000000000000A
FUSE 50000000000000000000000000000000000000A
FUSE 60000000000000000000000000000000000000A
FUSE 80000000000000000000000000000000000000A
FUSE 100000000000000000000000000000000000000A
FUSE 120000000000000000000000000000000000000A
FUSE 150000000000000000000000000000000000000A
FUSE 200000000000000000000000000000000000000A
FUSE 250000000000000000000000000000000000000A
FUSE 300000000000000000000000000000000000000A
FUSE 400000000000000000000000000000000000000A
FUSE 500000000000000000000000000000000000000A
FUSE 600000000000000000000000000000000000000A
FUSE 800000000000000000000000000000000000000A
FUSE 1000000000000000000000000000000000000000A
FUSE 1200000000000000000000000000000000000000A
FUSE 1500000000000000000000000000000000000000A
FUSE 2000000000000000000000000000000000000000A
FUSE 2500000000000000000000000000000000000000A
FUSE 3000000000000000000000000000000000000000A
FUSE 4000000000000000000000000000000000000000A
FUSE 5000000000000000000000000000000000000000A
FUSE 6000000000000000000000000000000000000000A
FUSE 8000000000000000000000000000000000000000A
FUSE 10000000000000000000000000000000000000000A
FUSE 12000000000000000000000000000000000000000A
FUSE 15000000000000000000000000000000000000000A
FUSE 20000000000000000000000000000000000000000A
FUSE 25000000000000000000000000000000000000000A
FUSE 30000000000000000000000000000000000000000A
FUSE 40000000000000000000000000000000000000000A
FUSE 50000000000000000000000000000000000000000A
FUSE 60000000000000000000000000000000000000000A
FUSE 80000000000000000000000000000000000000000A
FUSE 100000000000000000000000000000000000000000A
FUSE 120000000000000000000000000000000000000000A
FUSE 150000000000000000000000000000000000000000A
FUSE 200000000000000000000000000000000000000000A
FUSE 250000000000000000000000000000000000000000A
FUSE 300000000000000000000000000000000000000000A
FUSE 400000000000000000000000000000000000000000A
FUSE 500000000000000000000000000000000000000000A
FUSE 600000000000000000000000000000000000000000A
FUSE 800000000000000000000000000000000000000000A
FUSE 1000000000000000000000000000000000000000000A
FUSE 1200000000000000000000000000000000000000000A
FUSE 1500000000000000000000000000000000000000000A
FUSE 2000000000000000000000000000000000000000000A
FUSE 2500000000000000000000000000000000000000000A
FUSE 3000000000000000000000000000000000000000000A
FUSE 4000000000000000000000000000000000000000000A
FUSE 5000000000000000000000000000000000000000000A
FUSE 6000000000000000000000000000000000000000000A
FUSE 8000000000000000000000000000000000000000000A
FUSE 10000000000000000000000000000000000000000000A
FUSE 12000000000000000000000000000000000000000000A
FUSE 15000000000000000000000000000000000000000000A
FUSE 20000000000000000000000000000000000000000000A
FUSE 25000000000000000000000000000000000000000000A
FUSE 30000000000000000000000000000000000000000000A
FUSE 40000000000000000000000000000000000000000000A
FUSE 50000000000000000000000000000000000000000000A
FUSE 60000000000000000000000000000000000000000000A
FUSE 80000000000000000000000000000000000000000000A
FUSE 100000000000000000000000000000000000000000000A
FUSE 120000000000000000000000000000000000000000000A
FUSE 150000000000000000000000000000000000000000000A
FUSE 200000000000000000000000000000000000000000000A
FUSE 250000000000000000000000000000000000000000000A
FUSE 300000000000000000000000000000000000000000000A
FUSE 400000000000000000000000000000000000000000000A
FUSE 500000000000000000000000000000000000000000000A
FUSE 600000000000000000000000000000000000000000000A
FUSE 800000000000000000000000000000000000000000000A
FUSE 1000000000000000000000000000000000000000000000A
FUSE 1200000000000000000000000000000000000000000000A
FUSE 1500000000000000000000000000000000000000000000A
FUSE 2000000000000000000000000000000000000000000000A
FUSE 2500000000000000000000000000000000000000000000A
FUSE 3000000000000000000000000000000000000000000000A
FUSE 4000000000000000000000000000000000000000000000A
FUSE 5000000000000000000000000000000000000000000000A
FUSE 6000000000000000000000000000000000000000000000A
FUSE 8000000000000000000000000000000000000000000000A
FUSE 10000000000000000000000000000000000000000000000A
FUSE 12000000000000000000000000000000000000000000000A
FUSE 15000000000000000000000000000000000000000000000A
FUSE 20000000000000000000000000000000000000000000000A
FUSE 25000000000000000000000000000000000000000000000A
FUSE 30000000000000000000000000000000000000000000000A
FUSE 40000000000000000000000000000000000000000000000A
FUSE 50000000000000000000000000000000000000000000000A
FUSE 60000000000000000000000000000000000000000000000A
FUSE 80000000000000000000000000000000000000000000000A
FUSE 100000000000000000000000000000000000000000000000A
FUSE 120000000000000000000000000000000000000000000000A
FUSE 150000000000000000000000000000000000000000000000A
FUSE 200000000000000000000000000000000000000000000000A
FUSE 250000000000000000000000000000000000000000000000A
FUSE 300000000000000000000000000000000000000000000000A
FUSE 400000000000000000000000000000000000000000000000A
FUSE 500000000000000000000000000000000000000000000000A
FUSE 600000000000000000000000000000000000000000000000A
FUSE 800000000000000000000000000000000000000000000000A
FUSE 1000000000000000000000000000000000000000000000000A
FUSE 1200000000000000000000000000000000000000000000000A
FUSE 1500000000000000000000000000000000000000000000000A
FUSE 2000000000000000000000000000000000000000000000000A
FUSE 2500000000000000000000000000000000000000000000000A
FUSE 3000000000000000000000000000000000000000000000000A
FUSE 4000000000000000000000000000000000000000000000000A
FUSE 5000000000000000000000000000000000000000000000000A
FUSE 6000000000000000000000000000000000000000000000000A
FUSE 8000000000000000000000000000000000000000000000000A
FUSE 10000000000000000000000000000000000000000000000000A
FUSE 12000000000000000000000000000000000000000000000000A
FUSE 15000000000000000000000000000000000000000000000000A
FUSE 20000000000000000000000000000000000000000000000000A
FUSE 25000000000000000000000000000000000000000000000000A
FUSE 30000000000000000000000000000000000000000000000000A
FUSE 40000000000000000000000000000000000000000000000000A
FUSE 50000000000000000000000000000000000000000000000000A
FUSE 60000000000000000000000000000000000000000000000000A
FUSE 80000000000000000000000000000000000000000000000000A
FUSE 100000000000000000000000000000000000000000000000000A
FUSE 120000000000000000000000000000000000000000000000000A
FUSE 150000000000000000000000000000000000000000000000000A
FUSE 200000000000000000000000000000000000000000000000000A
FUSE 250000000000000000000000000000000000000000000000000A
FUSE 300000000000000000000000000000000000000000000000000A
FUSE 400000000000000000000000000000000000000000000000000A
FUSE 500000000000000000000000000000000000000000000000000A
FUSE 600000000000000000000000000000000000000000000000000A
FUSE 800000000000000000000000000000000000000000000000000A
FUSE 1000000000000000000000000000000000000000000000000000A
FUSE 1200000000000000000000000000000000000000000000000000A
FUSE 1500000000000000000000000000000000000000000000000000A
FUSE 2000000000000000000000000000000000000000000000000000A
FUSE 2500000000000000000000000000000000000000000000000000A
FUSE 3000000000000000000000000000000000000000000000000000A
FUSE 4000000000000000000000000000000000000000000000000000A
FUSE 5000000000000000000000000000000000000000000000000000A
FUSE 6000000000000000000000000000000000000000000000000000A
FUSE 8000000000000000000000000000000000000000000000000000A
FUSE 10000000000000000000000000000000000000000000000000000A
FUSE 12000000000000000000000000000000000000000000000000000A
FUSE 15000000000000000000000000000000000000000000000000000A
FUSE 20000000000000000000000000000000000000000000000000000A
FUSE 25000000000000000000000000000000000000000000000000000A
FUSE 30000000000000000000000000000000000000000000000000000A
FUSE 40000000000000000000000000000000000000000000000000000A
FUSE 50000000000000000000000000000000000000000000000000000A
FUSE 60000000000000000000000000000000000000000000000000000A
FUSE 80000000000000000000000000000000000000000000000000000A
FUSE 100000000000000000000000000000000000000000000000000000A
FUSE 120000000000000000000000000000000000000000000000000000A
FUSE 150000000000000000000000000000000000000000000000000000A
FUSE 200000000000000000000000000000000000000000000000000000A
FUSE 250000000000000000000000000000000000000000000000000000A
FUSE 300000000000000000000000000000000000000000000000000000A
FUSE 400000000000000000000000000000000000000000000000000000A
FUSE 500000000000000000000000000000000000000000000000000000A
FUSE 600000000000000000000000000000000000000000000000000000A
FUSE 800000000000000000000000000000000000000000000000000000A
FUSE 1000000000000000000000000000000000000000000000000000000A
FUSE 1200000000000000000000000000000000000000000000000000000A
FUSE 1500000000000000000000000000000000000000000000000000000A
FUSE 2000000000000000000000000000000000000000000000000000000A
FUSE 2500000000000000000000000000000000000000000000000000000A
FUSE 3000000000000000000000000000000000000000000000000000000A
FUSE 4000000000000000000000000000000000000000000000000000000A
FUSE 5000000000000000000000000000000000000000000000000000000A
FUSE 6000000000000000000000000000000000000000000000000000000A
FUSE 8000000000000000000000000000000000000000000000000000000A
FUSE 10000000000000000000000000000000000000000000000000000000A
FUSE 12000000000000000000000000000000000000000000000000000000A
FUSE 15000000000000000000000000000000000000000000000000000000A
FUSE 20000000000000000000000000000000000000000000000000000000A
FUSE 25000000000000000000000000000000000000000000000000000000A
FUSE 30000000000000000000000000000000000000000000000000000000A
FUSE 40000000000000000000000000000000000000000000000000000000A
FUSE 50000000000000000000000000000000000000000000000000000000A
FUSE 60000000000000000000000000000000000000000000000000000000A
FUSE 80000000000000000000000000000000000000000000000000000000A
FUSE 100000000000000000000000000000000000000000000000000000000A
FUSE 120000000000000000000000000000000000000000000000000000000A
FUSE 150000000000000000000000000000000000000000000000000000000A
FUSE 200000000000000000000000000000000000000000000000000000000A
FUSE 250000000000000000000000000000000000000000000000000000000A
FUSE 300000000000000000000000000000000000000000000000000000000A
FUSE 400000000000000000000000000000000000000000000000000000000A
FUSE 500000000000000000000000000000000000000000000000000000000A
FUSE 600000000000000000000000000000000000000000000000000000000A
FUSE 800000000000000000000000000000000000000000000000000000000A
FUSE 1000000000000000000000000000000000000000000000000000000000A
FUSE 1200000000000000000000000000000000000000000000000000000000A
FUSE 1500000000000000000000000000000000000000000000000000000000A
FUSE 2000000000000000000000000000000000000000000000000000000000A
FUSE 2500000000000000000000000000000000000000000000000000000000A
FUSE 3000000000000000000000000000000000000000000000000000000000A
FUSE 4000000000000000000000000000000000000000000000000000000000A
FUSE 5000000000000000000000000000000000000000000000000000000000A
FUSE 6000000000000000000000000000000000000000000000000000000000A
FUSE 8000000000000000000000000000000000000000000000000000000000A
FUSE 10000000000000000000000000000000000000000000000000000000000A
FUSE 12000000000000000000000000000000000000000000000000000000000A
FUSE 15000000000000000000000000000000000000000000000000000000000A
FUSE 20000000000000000000000000000000000000000000000000000000000A
FUSE 25000000000000000000000000000000000000000000000000000000000A
FUSE 30000000000000000000000000000000000000000000000000000000000A
FUSE 40000000000000000000000000000000000000000000000000000000000A
FUSE 50000000000000000000000000000000000000000000000000000000000A
FUSE 60000000000000000000000000000000000000000000000000000000000A
FUSE 80000000000000000000000000000000000000000000000000000000000A
FUSE 100000000000000000000000000000000000000000000000000000000000A
FUSE 120000000000000000000000000000000000000000000000000000000000A
FUSE 150000000000000000000000000000000000000000000000000000000000A
FUSE 200000000000000000000000000000000000000000000000000000000000A
FUSE 250000000000000000000000000000000000000000000000000000000000A
FUSE 300000000000000000000000000000000000000000000000000000000000A
FUSE 400000000000000000000000000000000000000000000000000000000000A
FUSE 500000000000000000000000000000000000000000000000000000000000A
FUSE 600000000000000000000000000000000000000000000000000000000000A
FUSE 800000000000000000000000000000000000000000000000000000000000A
FUSE 1000000000000000000000000000000000000000000000000000000000000A
FUSE 1200000000000000000000000000000000000000000000000000000000000A
FUSE 1500000000000000000000000000000000000000000000000000000000000A
FUSE 2000000000000000000000000000000000000000000000000000000000000A
FUSE 2500000000000000000000000000000000000000000000000000000000000A
FUSE 3000000000000000000000000000000000000000000000000000000000000A
FUSE 4000000000000000000000000000000000000000000000000000000000000A
FUSE 5000000000000000000000000000000000000000000000000000000000000A
FUSE 6000000000000000000000000000000000000000000000000000000000000A
FUSE 8000000000000000000000000000000000000000000000000000000000000A
FUSE 10000000000000000000000000000000000000000000000000000000000000A
FUSE 12000000000000000000000000000000000000000000000000000000000000A
FUSE 15000000000000000000000000000000000000000000000000000000000000A
FUSE 20000000000000000000000000000000000000000000000000000000000000A
FUSE 25000000000000000000000000000000000000000000000000000000000000A
FUSE 30000000000000000000000000000000000000000000000000000000000000A
FUSE 40000000000000000000000000000000000000000000000000000000000000A
FUSE 50000000000000000000000000000000000000000000000000000000000000A
FUSE 60000000000000000000000000000000000000000000000000000000000000A
FUSE 80000000000000000000000000000000000000000000000000000000000000A
FUSE 100000000000000000000000000000000000000000000000000000000000000A
FUSE 120000000000000000000000000000000000000000000000000000000000000A
FUSE 150000000000000000000000000000000000000000000000000000000000000A
FUSE 200000000000000000000000000000000000000000000000000000000000000A
FUSE 250000000000000000000000000000000000000000000000000000000000000A
FUSE 300000000000000000000000000000000000000000000000000000000000000A
FUSE 400000000000000000000000000000000000000000000000000000000000000A
FUSE 500000000000000000000000000000000000000000000000000000000000000A
FUSE 600000000000000000000000000000000000000000000000000000000000000A
FUSE 800000000000000000000000000000000000000000000000000000000000000A
FUSE 1000000000000000000000000000000000000000000000000000000000000000A
FUSE 1200000000000000000000000000000000000000000000000000000000000000A
FUSE 1500000000000000000000000000000000000000000000000000000000000000A
FUSE 2000000000000000000000000000000000000000000000000000000000000000A
FUSE 2500000000000000000000000000000000000000000000000000000000000000A
FUSE 3000000000000000000000000000000000000000000000000000000000000000A
FUSE 4000000000000000000000000000000000000000000000000000000000000000A
FUSE 5000000000000000000000000000000000000000000000000000000000000000A
FUSE 6000000000000000000000000000000000000000000000000000000000000000A
FUSE 8000000000000000000000000000000000000000000000000000000000000000A
FUSE 10000000000000000000000000000000000000000000000000000000000000000A
FUSE 12000000000000000000000000000000000000000000000000000000000000000A
FUSE 15000000000000000000000000000000000000000000000000000000000000000A
FUSE 20000000000000000000000000000000000000000000000000000000000000000A
FUSE 25000000000000000000000000000000000000000000000000000000000000000A
FUSE 30000000000000000000000000000000000000000000000000000000000000000A
FUSE 40000000000000000000000000000000000000000000000000000000000000000A
FUSE 50000000000000000000000000000000000000000000000000000000000000000A
FUSE 60000000000000000000000000000000000000000000000000000000000000000A
FUSE 80000000000000000000000000000000000000000000000000000000000000000A
FUSE 100000000000000000000000000000000000000000000000000000000000000000A
FUSE 120000000000000000000000000000000000000000000000000000000000000000A
FUSE 150000000000000000000000000000000000000000000000000000000000000000A
FUSE 200000000000000000000000000000000000000000000000000000000000000000A
FUSE 250000000000000000000000000000000000000000000000000000000000000000A
FUSE 300000000000000000000000000000000000000000000000000000000000000000A
FUSE 400000000000000000000000000000000000000000000000000000000000000000A
FUSE 500000000000000000000000000000000000000000000000000000000000000000A
FUSE 600000000000000000000000000000000000000000000000000000000000000000A
FUSE 800000000000000000000000000000000000000000000000000000000000000000A
FUSE 1000000000000000000000000000000000000000000000000000000000000000000A
FUSE 1200000000000000000000000000000000000000000000000000000000000000000A
FUSE 1500000000000000000000000000000000000000000000000000000000000000000A
FUSE 2000000000000000000000000000000000000000000000000000000000000000000A
FUSE 2500000000000000000000000000000000000000000000000000000000000000000A
FUSE 3000000000000000000000000000000000000000000000000000000000000000000A
FUSE 4000000000000000000000000000000000000000000000000000000000000000000A
FUSE 5000000000000000000000000000000000000000000000000000000000000000000A
FUSE 6000000000000000000000000000000000000000000000000000000000000000000A
FUSE 8000000000000000000000000000000000000000000000000000000000000000000A
FUSE 10000000000000000000000000000000000000000000000000000000000000000000A
FUSE 12000000000000000000000000000000000000000000000000000000000000000000A
FUSE 15000000000000000000000000000000000000000000000000000000000000000000A
FUSE 20000000000000000000000000000000000000000000000000000000000000000000A
FUSE 25000000000000000000000000000000000000000000000000000000000000000000A
FUSE 30000000000000000000000000000000000000000000000000000000000000000000A
FUSE 40000000000000000000000000000000000000000000000000000000000000000000A
FUSE 50000000000000000000000000000000000000000000000000000000000000000000A
FUSE 60000000000000000000000000000000000000000000000000000000000000000000A
FUSE 80000000000000000000000000000000000000000000000000000000000000000000A
FUSE 100000000000000000000000000000000000000000000000000000000000000000000A
FUSE 120000000000000000000000000000000000000000000000000000000000000000000A
FUSE 150000000000000000000000000000000000000000000000000000000000000000000A
FUSE 200000000000000000000000000000000000000000000000000000000000000000000A
FUSE 250000000000000000000000000000000000000000000000000000000000000000000A
FUSE 300000000000000000000000000000000000000000000000000000000000000000000A
FUSE 400000000000000000000000000000000000000000000000000000000000000000000A
FUSE 500000000000000000000000000000000000000000000000000000000000000000000A
FUSE 600000000000000000000000000000000000000000000000000000000000000000000A
FUSE 800000000000000000000000000000000000000000000000000000000000000000000A
FUSE 1000000000000000000000000000000000000000000000000000000000000000000000A
FUSE 1200000000000000000000000000000000000000000000000000000000000000000000A
FUSE 1500000000000000000000000000000000000000000000000000000000000000000000A
FUSE 2000000000000000000000000000000000000000000000000000000000000000000000A
FUSE 2500000000000000000000000000000000000000000000000000000000000000000000A
FUSE 3000000000000000000000000000000000000000000000000000000000000000000000A
FUSE 4000000000000000000000000000000000000000000000000000000000000000000000A
FUSE 5000000000000000000000000000000000000000000000000000000000000000000000A
FUSE 6000000000000000000000000000000000000000000000000000000000000000000000A
FUSE 8000000000000000000000000000000000000000000000000000000000000000000000A
FUSE 10000000000000000000000000000000000000000000000000000000000000000000000A
FUSE 12000000000000000000000000000000000000000000000000000000000000000000000A
FUSE 15000000000000000000000000000000000000000000000000000000000000000000000A
FUSE 20000000000000000000000000000000000000000000000000000000000000000000000A
FUSE 25000000000000000000000000000000000000000000000000000000000000000000000A
FUSE 30000000000000000000000000000000000000000000000000000000000000000000000A
FUSE 40000000000000000000000000000000000000000000000000000000000000000000000A
FUSE 50000000000000000000000000000000000000000000000000000000000000000000000A
FUSE 60000000000000000000000000000000000000000000000000000000000000000000000A
FUSE 80000000000000000000000000000000000000000000000000000000000000000000000A
FUSE 100000000000000000000000000000000000000000000000000000000000000000000000A
FUSE 120000000000000000000000000000000000000000000000000000000000000000000000A
FUSE 150000000000000000000000000000000000000000000000000000000000000000000000A
FUSE 200000000000000000000000000000000000000000000000000000000000000000000000A
FUSE 250000000000000000000000000000000000000000000000000000000000000000000000A
FUSE 300000000000000000000000000000000000000000000000000000000000000000000000A
FUSE 400000000000000000000000000000000000000000000000000000000000000000000000A
FUSE 500000000000000000000000000000000000000000000000000000000000000000000000A
FUSE 600000000000000000000000000000000000000000000000000000000000000000000000A
FUSE 800000000000000000000000000000000000000000000000000000000000000000000000A
FUSE 1000000000000000000000000000000000000000000000000000000000000000000000000A
FUSE 1200000000000000000000000000000000000000000000000000000000000000000000000A
FUSE 1500000000000000000000000000000000000000000000000000000000000000000000000A
FUSE 2000000000000000000000000000000000000000000000000000000000000000000000000A
FUSE 2500000000000000000000000000000000000000000000000000000000000000000000000A
FUSE 3000000000000000000000000000000000000000000000000000000000000000000000000A
FUSE 4000000000000000000000000000000000000000000000000000000000000000000000000A
FUSE 5000000000000000000000000000000000000000000000000000000000000000000000000A
FUSE 6000000000000000000000000000000000000000000000000000000000000000000000000A
FUSE 8000000000000000000000000000000000000000000000000000000000000000000000000A
FUSE 10000000000000000000000000000000000000000000000000000000000000000000000000A
FUSE 12000000000000000000000000000000000000000000000000000000000000000000000000A
FUSE 15000000000000000000000000000000000000000000000000000000000000000000000000A
FUSE 20000000000000000000000000000000000000000000000000000000000000000000000000A
FUSE 25000000000000000000000000000000000000000000000000000000000000000000000000A
FUSE 30000000000000000000000000000000000000000000000000000000000000000000000000A
FUSE 40000000000000000000000000000000000000000000000000000000000000000000000000A
FUSE 50000000000000000000000000000000000000000000000000000000000000000000000000A
FUSE 60000000000000000000000000000000000000000000000000000000000000000000000000A
FUSE 80000000000000000000000000000000000000000000000000000000000000000000000000A
FUSE 100000000000000000000000000000000000000000000000000000000000000000000000000A
FUSE 120000000000000000000000000000000000000000000000000000000000000000000000000A
FUSE 150000000000000000000000000000000000000000000000000000000000000000000000000A
FUSE 200000000000000000000000000000000000000000000000000000000000000000000000000A
FUSE 250000000000000000000000000000000000000000000000000000000000000000000000000A
FUSE 300000000000000000000000000000000000000000000000000000000000000000000000000A
FUSE 400000000000000000000000000000000000000000000000000000000000000000000000000A
FUSE 500000000000000000000000000000000000000000000000000000000000000000000000000A
FUSE 600000000000000000000000000000000000000000000000000000000000000000000000000A
FUSE 800000000000000000000000000000000000000000000000000000000000000000000000000A
FUSE 1000000000000000000000000000000000000000000000000000000000000000000000000000A
FUSE 1200000000000000000000000000000000000000000000000000000000000000000000000000A
FUSE 1500000000000000000000000000000000000000000000000000000000000000000000000000A
FUSE 2000000000000000000000000000000000000000000000000000000000000000000000000000A
FUSE 2500000000000000000000000000000000000000000000000000000000000000000000000000A
FUSE 3000000000000000000000000000000000000000000000000000000000000000000000000000A
FUSE 4000000000000000000000000000000000000000000000000000000000000000000000000000A
FUSE 5000000000000000000000000000000000000000000000000000000000000000000000000000A
FUSE 6000000000000000000000000000000000000000000000000000000000000000000000000000A
FUSE 8000000000000000000000000000000000000000000000000000000000000000000000000000A
FUSE 10000000000000000000000000000000000000000000000000000000000000000000000000000A
FUSE 12000000000000000000000000000000000000000000000000000000000000000000000000000A
FUSE 15000000000000000000000000000000000000000000000000000000000000000000000000000A
FUSE 20000000000000000000000000000000000000000000000000000000000000000000000000000A
FUSE 25000000000000000000000000000000000000000000000000000000000000000000000000000A
FUSE 30000000000000000000000000000000000000000000000000000000000000000000000000000A
FUSE 40000000000000000000000000000000000000000000000000000000000000000000000000000A
FUSE 50000000000000000000000000000000000000000000000000000000000000000000000000000A
FUSE 60000000000000000000000000000000000000000000000000000000000000000000000000000A
FUSE

Motive Power Industry Co., LTD.
ADDITIONAL OPERATION NOTICE for PGO Bug Racer USER

1. **Control pedals:** before starting the engine or after every use please ensure the stop and go pedals move freely. Road salt, sand, dirt etc can contaminate and affect the function of both of these pedals. Please ensure to lubricate on a regular basis.

2. **Warm-up:**
   - To look after your engine, please warm-up for 5 minutes when started from cold, and do not open the throttle fully during the warm-up period.
   - During the warm-up period, the exhaust may smoke a little. But once the warm up period has finished, the smoke will disappear!

3. **Controls:** The below figure shows 3 controls levers, be aware they all shall be only operated when the vehicle is completely stationery!

4. **Gear shifting:** Refer to the gear shift box as below photo, practice making gear lever slide into correct position. Be more familiar with the gear lever shift route, and it will get easier to enjoy driving.

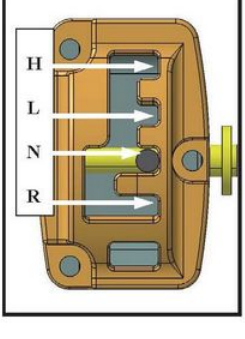

5. **Parking:**
   - For your safety, please park the vehicle on a flat area.
   - Before leave the vehicle, remember to pull the Parking lever up.

6. **DO NOT PERFORM STUNTS:** this vehicle is designed for on-road use. If the vehicle is taken off road and over jumps etc this can affect your warranty. If the vehicle is taken over a jump and damage is caused to the gearbox etc then your warranty will be void.
7. **DRAINING THE PCV TUBE OIL:**
   - The oil of Positive Crankcase Ventilation (PCV) accumulates in the air cleaner PCV tube as shown.
   - Take off the plug to drain the oil about per 500 kilometers before the oil is full of the whole PCV tube, otherwise the engine performance will be affected.
   - After draining the oil, be sure install the plug and clip back well.

8. **CLEANING THE AIR INLET of CVT TRANSMISSION:**
   - Continuous Variable Transmission (CVT) sucks fresh air to reduce the high temperature inside.
   - To prolong the life of the CVT parts, such as V-belt, you have to maintain the air inlet. So we recommended you to clean the inlet about per 1,000 kilometers.
   - This must be cleaned after using off road.

9. **CLEANING THE INSIDE of CVT TRANSMISSION AND CHECK PARTS:**
   - The parts inside are all consumable parts, that means you have to pay attention to service them.
   - Clean the dust, powder…etc. inside the CVT periodically about per 2000~3000 kilometers. Or more often when exposing the machine to dirty extreme or wet conditions the harder you drive the sooner you should service.
   - Check the V-belt, if there is any crack occurs, replace it.
   - Check the o-ring as the below figure shown, replace it when it worn-out and clutch-in not smoothing.

BR-500 Pre-Delivery Inspection
Assembly Operation Drawing

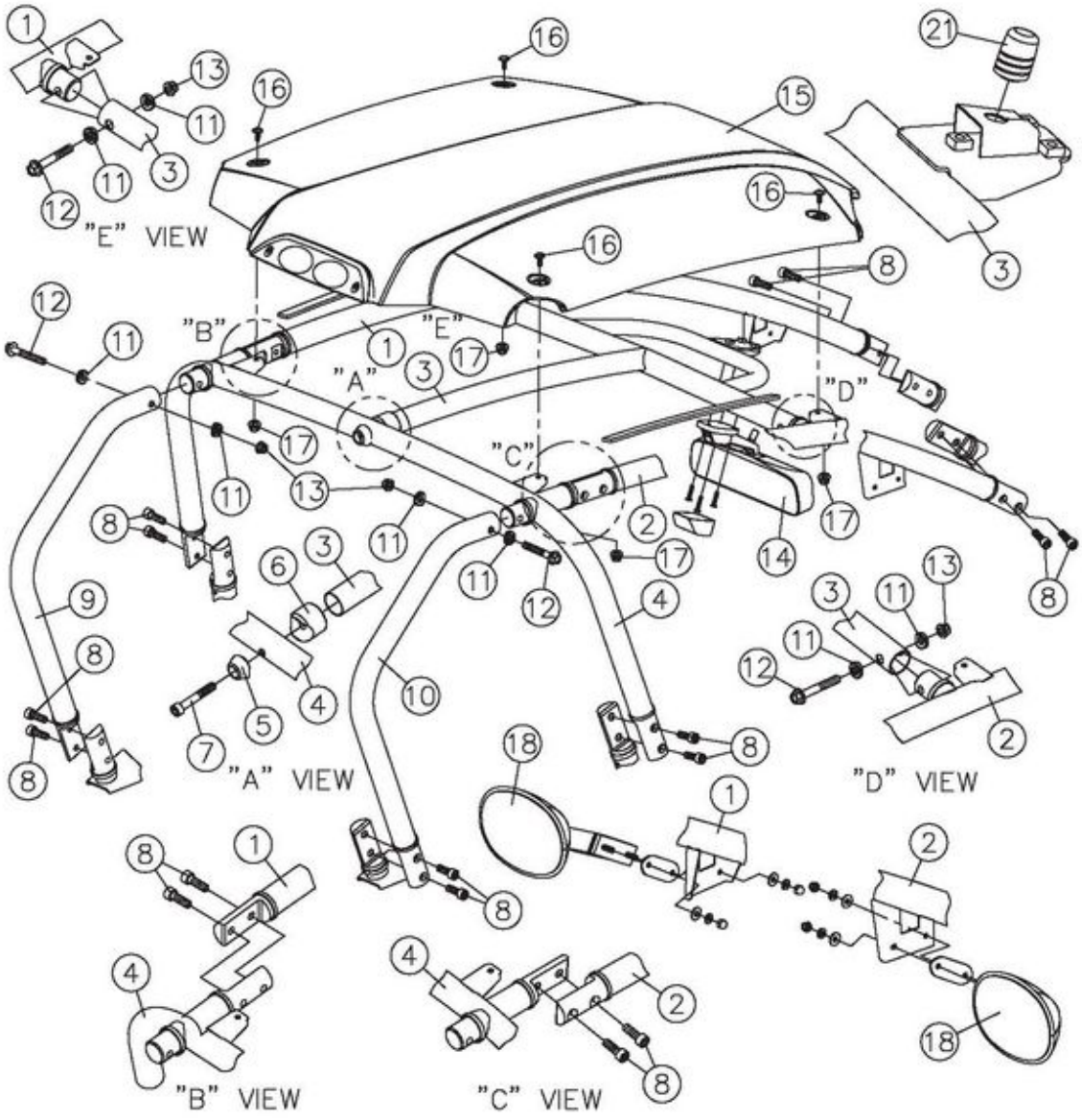

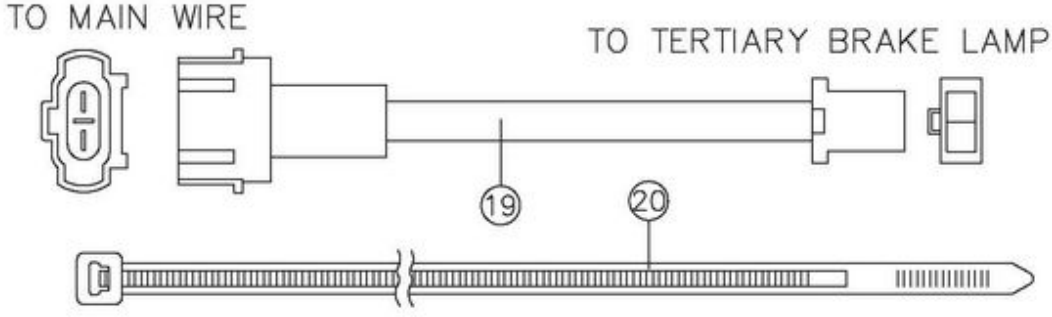

1 / 3

BR-500 Pre-Delivery Inspection
Assembly Procedure

NO.	OP INSTRUCTION	DEVICE NAME	CODE & SPEC.	REMARK
1	TO PUT PART 4 AT THE FRAME FIXED ,AND LOCK WITH PART 8, BUT NOT TIGHTLY	1. AIR TOOL 2. HEXAGON HEAD SLEEVE	3/8" 3/8"X8mm	
2	1.TO PUT THE PART 1+2 AT THE BOTH SIDE OF FRAME 2.THEN, TO LOCK PART 1+2 WITH PART 8 AT THE FRAME FIXED, BUT NOT TIGHTLY	1. AIR TOOL 2. HEXAGON HEAD SLEEVE	3/8" 3/8"X8mm	
3	1.TO PUT PART 21 AT PART 3 FIXED , 2.TO PUT THE BOTH SIDE OF PART 3 AT PART 1+2 FIXED 3.AND LOCK WITH PART 11+12+13,BUT NOT TIGHTLY 4.THEN, TO INSERT PART 6 INTO PART 3 5.AND SCREW PART 5+7 AT PART 4	1. AIR TOOL 2. SLEEVE 3.HEXAGON WRENCH	3/8" 3/8"X14mm 12mmX14mm	
4	TO PUT THE REAR END OF PART 1/2 BY MIXING WITH PART 8 AT PART 4 FIXED,BUT NOT TIGHTLY	1. AIR TOOL 2. HEXAGON HEAD SLEEVE	3/8" 3/8"X8mm	
5	1.TO PUT PART 9+10 AT PART 4 FIXED 2.THEN, TO LOCK PART 11+12+13, BUT NOT TIGHTLY 3.THEN, TO PUT THE LOWER END OF PART 9+10 SCREWED BY PART 8, NOT TIGHTLY	1. AIR TOOL 2. SLEEVE 3.HEXAGON WRENCH 4. HEXAGON HEAD SLEEVE	3/8" 3/8"X14mm 12mmX14mm 3/8"X8mm	
6	TO LOCK PART 7+8+12+13 SECURELY	1. AIR TOOL 2. SLEEVE 3.HEXAGON WRENCH 4. HEXAGON HEAD SLEEVE	3/8" 3/8"X14mm 12mmX14mm 3/8"X8mm	
7	1.TO PUT PART 15 AT FRAME FIXED 2.TO SECURE WITH PART 16+17	1. AIR DRIVER SCREW 2. + TYPE DRIVER BITS 3.HEXAGON WRENCH	1/4" 1/4"X#2 10mmX12mm	
8	1.TO PUT PART 14 AT FRAME FIXED AND SECURE BY THE PART 14 ATTACHED SCREW 2.TO CLOSE THE PART 14 ATTACHED COVER	1.AIR DRIVER BITS 2. + TYPE DRIVER BITS	1/4" 1/4"X#2	
9	1.TO PUT PART 18 AT FRAME FIXED 2.TO SECURE PART 18 ATTACHED NUT + WASHER TIGHTLY	DOUBLE BOX-END WRENCH	10mmX12mm	
10	1.IF THREE IS A POWER SUPPLY WIRE ON THE THIRD BRAKE LAMP, 2.TO MAKE ONE END OF PART 19 CONNECT WITH THE THIRD BRAKE LAMP 3.AND TO CONNECT ANNOTHER END WITH THE MAIN HARDNESS 4.TO CLIP PART 20 + 19 ON PART 4			

2 / 3

ENGLISH

BR-500 Pre-Delivery Inspection
Part's List

REF NO	PART NO.	DESCRIPTION	REGD NO	REMARK
1	B84210907700	NON-ROLL TUBE COMP.LH SIDE	1	
2	B842A1907700	NON-ROLL TUBE COMP.RH SIDE	1	
3	B84211007700	ACROSS TUBE COMP. UP	1	
4	B84211707700	ROLL CAGE ACROSS. RR COMP	1	
5	B84211600000	WASHER PIPE A	1	
6	B84211500000	BUSH PIPE	1	
7	90211007000	HEXAGON SCOKET HEAD CAP SCREW	1	
8	90211003000	HEXAGON SCOKET HEAD CAP SCREW	16	
9	B84211107700	NON-ROLL FIXED TUBE COMP.LH	1	
10	B842A6007700	NON-ROLL FIXED TUBE COMP.RH	1	
11	B84211800000	WASHER PIPE B	8	
12	90191006001	HEXAGON FLANGE BOLT	4	
13	92061000004	HEXAGON FLANGE NUT	4	
14	B86170000000	INTERIOR MIRROR ASSY	1	
15		TERTIARY BRAKE LAMP & CEILING COVER	1	
16	90200601800	BOLT WITH WASHER	4	
17	92040600000	HEXAGON FLANGE NUT (M6*1.0P)	4	
18	B86160000000	BACK MIRROR COMP	1	
19	B85816200000	EXTENTION WIRE	1	
20	B87011400000	CABLE TIE	5	
21	X370A0200000	RUBBER CUSHION SPIRAL	1	

Extra Gebrauchsanleitungen für den Bugracer Fahrer.

1. Gas und Brems Pedale:

Vergewissern sie sich vor dem Starten des Motors und vor dem Fahrtantritt, das sich das Fahrzeug in einem Verkehrssicheren Allgemeinzustand befindet. Prüfen sie die Funktionen der Beleuchtungseinrichtungen, des Signalhornes und den Zustand der Bereifung. Weiter sollen die Bedienpeddle für Gas und Bremse leichtgängig in die Grundposition zurückkehren. Überprüfen Sie auch den Füllstand des Kraftstofftanks um einen möglichen Ausfall durch Kraftstoffmangel zu vermeiden.

2. Motorstart und Betriebstemperatur:

- Damit der Motor seine Leistungsfähigkeit voll erreicht, sollten sie ihn vor Fahrtantritt einen Moment warm laufen lassen.
- Während der Warmlaufzeit kann es zu Rauchbildung am Schalldämpfer kommen. Hat der Motor seine Betriebstemperatur erreicht kann das Fahrzeug normal eingesetz werden.

3. **Bedienung:** auf der Abbildung 3 werden die Bedienhebel dargestellt. Diese dürfen sie unter keinen Umständen während das Fahrzeug noch rollt betätigen. Sie dürfen nur bedient werden wenn dass Fahrzeug vollkommen zum Stillstand gekommen ist. Bei Nichtbeachten kann es zu schweren Schäden kommen!

4. **Schalten:** Auf den Abbildungen ist der Aufbau der Schaltkulisse zu sehen. Machen sie sich vor Fahrtantritt mit der Bedienung vertraut um Bedienfehler zu vermeiden.

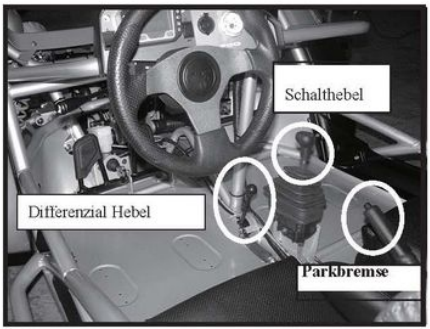

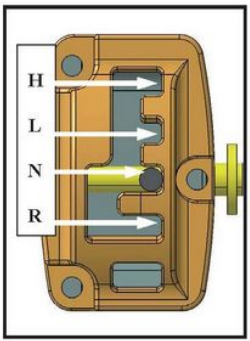

5. **PARKEN:**

- Beim Verlassen des Fahrzeugs soll immer die Wählhebelstellung P eingelegt werden.

  Achtung!! Das Fahrzeug muss unbedingt vollkommen zum Stillstand kommen, bevor der Wählhebel betätigt wird.

6. **Geländebetrieb:** Dieses Fahrzeug ist für den Straßenbetrieb entwickelt worden. Die mechanischen Bauteile von Motor und Getriebe können Schaden nehmen, wenn das Fahrzeug im Gelände oder bei Motorsportveranstaltungen eingesetzt wird. Sie gefährden ihre Garantieansprüche beim Gebrauch abseits befestigter Straßen.

GERMANY

Extra Wartung für den Bugracer 500i

7. Ölleitung entlüften.

- ⌘ Das Öl sammelt sich in der Rückhalteleitung.
- ⌘ Entleeren sie alle 500 km, oder wenn notwendig auch früher, die Rückhalteleitung. Die Motorleistung geht drastisch zurück, wenn sie diesen Hinweis nicht beachten.
- ⌘ Nach dem Entleeren die Schlauchleitung wieder fest verschließen.

8. Reinigung vom Lufteinlass von CVT.

- ⌘ der CVT Trieb wird über angesaugte Frischluft gekühlt.
- ⌘ Um die Lebensdauer des CVT Triebes zu optimieren, sollten sie den Lufteinlass, alle 1000 km reinigen.

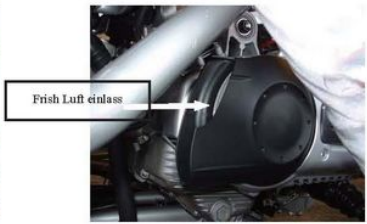

9. Reinigung des CVT Getriebes Sichtprüfung der Baugruppen.

- ⌘ Die Teile des CVT unterliegen einem normalen Verschleiß. Regelmäßige Wartungen verlängern die Lebensdauer und die Zuverlässigkeit des Fahrzeugs.
- ⌘ Alle 2000 km sollte die Mechanik gereinigt und eventuell gefettet werden. Staub und Schmutzanhaftungen bitte entfernen.
- ⌘ Sichtprüfung am Antriebsriemen durchführen und bei möglichen Verschleißerscheinungen den Riemen ersetzen.
- ⌘ Kontrollieren sie den O-Ring (letzte Abb.). Fetten sie ihn oder ersetzen sie ihn wenn nötig.

NOTA DI UTILIZZO SUPPLEMENTARE per UTILIZZATORI BugRacer

1. **PEDALI**: prima dell'accensione del motore, assicurarsi che il pedale dell'acceleratore(GO) e del freno(STOP) ritornino rapidamente alla loro posizione originale dopo il rilascio.

2. **TEMPERATURA DI ESERCIZIO DEL MOTORE**:
   - Per ottenere buone performance del motore, nell'accensione a freddo, riscaldarlo per 5 minuti, e non utilizzare il pedale dell'acceleratore al massimo durante questo periodo.
   - Durante il riscaldamento, il motore potrebbe emettere fumo dal silenziatore. Ma una volta terminato il periodo di riscaldamento, il fumo scomparirà!

3. **COMANDI:** La figura sotto mostra le 3 leve di comando, sulle quali si deve operare solamente quando il veicolo è completamente fermo!

4. **LEVA DEL CAMBIO :** In riferimento alla leva del cambio(vedi figura sotto a destra), è consigliabile prendere confidenza con essa, così che la leva marce sia sempre inserita nella posizione corretta. Utilizzando il veicolo diverrà familiare il corretto utilizzo della leva marce, e consentirà una guida semplice e divertente.

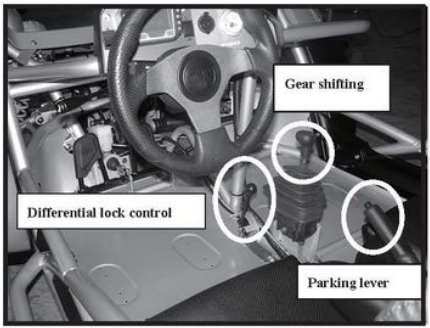

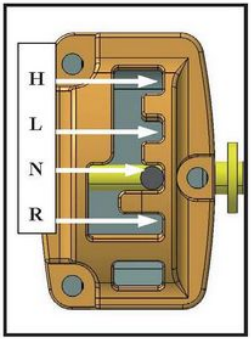

5. **PARCHEGGIO:**
   - Per la vostra sicurezza, normalmente si consiglia di scegliere una zona pianeggiante per parcheggiare il veicolo.
   - Prima di lasciare il veicolo, ricordarsi di azionare la leva del freno a mano('Parking lever', vedi figura sopra a sinistra), tirare verso l'alto la leva.

6. **NON COMPIERE AZIONI SPERICOLATE:** Fondamentalmente questo veicolo e progettato per l'uso su strada, e può dare gran divertimento di guida su terreni appropriati alla filosofia costruttiva del mezzo; ma se il conducente compie un salto senza rilasciare il pedale dell'acceleratore prima di saltare nell'aria, alcune parti potrebbero rompersi, e non saranno coperte da garanzia!

7. SVUOTARE IL TUBO OLIO PCV

- L'olio di lubrificazione e raffreddamento motore in esubero(Positive Crankcase Ventilation(PCV)) si accumula nel tubo PCV della cassa filtro aria(come mostra la figura a fianco).
- Togliere il tappo e svuotare il tubo dall'olio ogni 500 Chilometri circa, prima che l'olio riempia completamente il tubo PCV, altrimenti le prestazioni del motore saranno di molto ridotte.
- Dopo aver svuotato l'olio dal tubo, assicurarsi di reinstallare correttamente il tappo e l'apposito fermo del tubo PCV.

8. PULIZIA DELLA PRESA D'ARIA della TRASMISSIONE CVT(FRIZIONE)

- *Continuous Variable Transmission* (CVT), aspira aria fresca per ridurre le alte temperature interne.
- Per una buona durata delle parti della trasmissione CVT, come della cinghia di trasmissione, la presa d'aria deve essere mantenuta efficiente. Quindi raccomandiamo di provvedere alla pulizia della presa d'aria ogni 1000 Chilometri circa.
- Pulire la presa d'aria dopo ogni utilizzo del mezzo in condizioni di fuoristrada.

9. PULIZIA INTERNA della TRASMISSIONE CVT E CONTROLLO DELLE PARTI.

- Tutte le parti interne sono parti di consumo, questo significa che bisogna avere cura di sostituire le parti quando risultino consumate.
- Pulire periodicamente, ogni 2000-3000 KM circa, la trasmissione CVT all'interno da polvere, sabbia, ecc….
- Controllare la cinghia di trasmissione, se presenta fessure o tagli, sostituirla.
- Controllare l'o-ring come indicato dalla figura a desta, lubrificarlo o sostituirlo se viene rimosso.

10. PULIZIA DEL FILTRO ARIA:

Assicurarsi di mantenere il filtro aria pulito, altrimenti il motore potrebbe subire danni e le prestazioni del motore saranno ridotte!

- Periodicamente, pulire l'elemento(Sponge element) della cassa filtro aria ogni 1,000 KM se l'utilizzo è su strada.
- Pulire dopo ogni utilizzo del mezzo se in condizioni di fuoristrada.

PGO
BUILD 4 FUN

BR-500

MANUEL D'UTILISATION

http:www.english.pgo.com.tw

SOMMAIRE

MANUEL D'UTILISATION PAGE

COMPLEMENT D'INFORMATION POUR BUGRACER..... 1

AVANT-PROPOS 3

STICKER 7

OPERATION 8

A. COMMANDES D'UTILISATION

B. INSPECTION AVANT DE CONDUIRE

C. EMPLACEMENT DES COMPOSANTS

D. PASSAGERS

E. AJUSTEMENT DU SIEGE

F. COMMANDES POUR LA CONDUITE

G. LEVIER DE VITESSE

H. LEVIER DE CONTROLE DU BLOCAGE DE DIFFERENTIEL

I. PARKING

J. INSTRUCTION DE DEMARRAGE ET D'UTILISATION

ENTRETIEN 18

A. SYSTEME DE REFROIDISSEMENT

B. ENTRETIEN DU FILTRE A AIR

C. ENTRETIEN DE L'HUILE ET DU FILTRE DU MOTEUR

D. ENTRETIEN DE L'HUILE DE BOITE DE VITESSE

E. BOUGIE

F. AJUSTEMENT DU RALENTI

G. INSTRUCTIONS DE NETTOYAGE

H. LUBRIFICATION DU BUGGY

I. LUBRIFICATION DE L'ARBRE D'ENTRAINEMENT

J. AJUSTEMENT DES AMORTISSEURS AVANT ET ARRIERE

K. INSTRUCTION DE STOCKAGE

L. REMPLACEMENT DE LA ROUE AVANT

M. REMPLACEMENT DE LA ROUE ARRIERE

N. ALIGNEMENT DE LA ROUE AVANT

TABLEAU DE MAINTENANCE PERIODIQUE DU BR-500..... 27

INFORMATIONS D'ENTRETIEN..... 29

CIRCUIT ELECTRIQUE (INDEX DE TRADUCTION) 30

COMPLEMENT D'INFORMATION POUR BUG RACER

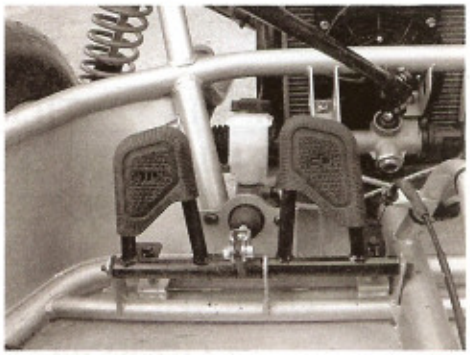

1. **CONTRÔLE DES PEDALES**: Avant de démarrer votre buggy, veuillez vérifier que les pédales reviennent bien rapidement à leur position d'origine après les avoir actionnées.

2. **PRECHAUFFAGE** :
   - Pour obtenir un meilleur rendement, lorsque le moteur est froid il est important de le laisser chauffer quelques minutes, en roulant doucement, et de ne pas mettre les gaz à fond avec un moteur froid. Ce moteur est d'une haute technologie issue de la compétition et demande un préchauffage.

   Lorsque le moteur est en préchauffage, il doit légèrement fumer, et cette fumée doit disparaître lorsque le moteur est chaud et peut être utilisé à plein régime.

3. **CONTRÔLES :** La figure ci-après montre 3 leviers (levier de boîte, levier frein de stationnement, parking, levier de blocage de différentiel). Ne jamais actionner ces leviers en roulant, mais toujours lorsque le véhicule ne roule pas !

4. **CHANGEMENT DE RAPPORT DE BOITE :** Vous référer à la figure ci après pour le passage des vitesses, celles ci doivent être bloquées dans la grille prévue à cet effet.

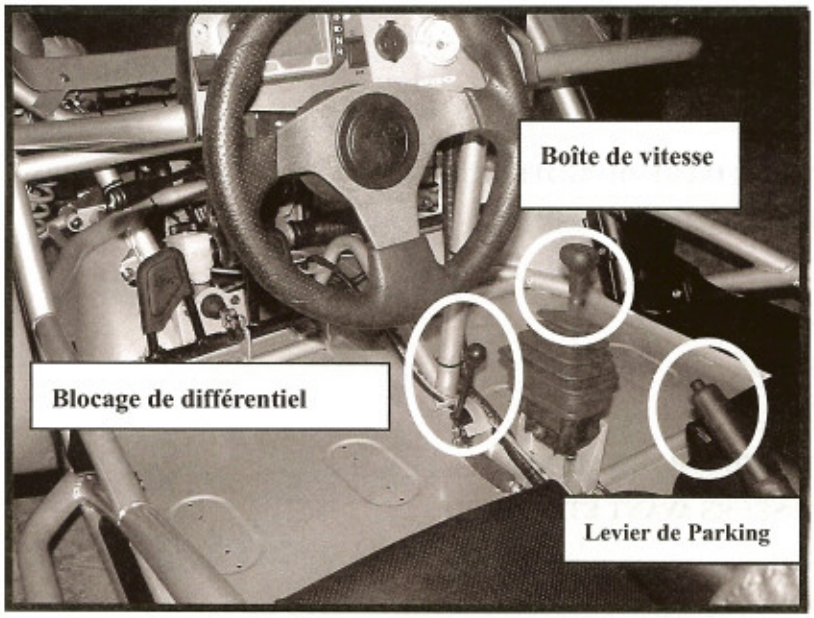

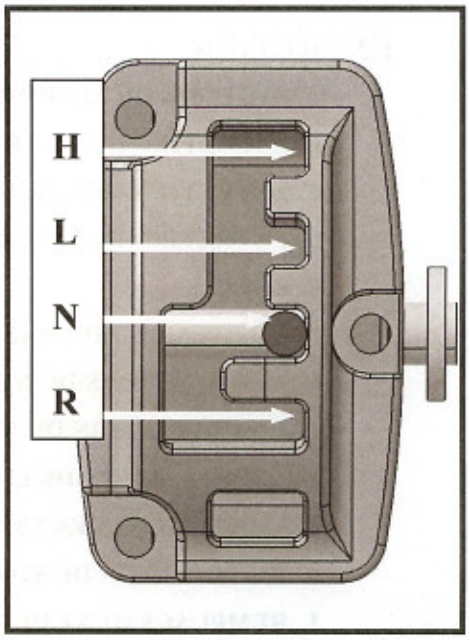

5. **PARKING:**
   - Pour votre sécurité, utilisez le frein de parking sur une zone plane.
   - Avant de quitter votre buggy, veillez relever votre levier de changement de vitesse.

6. **NE PAS FAIRE DE SAUT :** A la base, ce véhicule est conçu pour une utilisation route ou des routes en terre bien planes. Il vous apportera une entière satisfaction et beaucoup de plaisir. Mais si vous venez à faire un saut après une bosse, tout en laissant la pédale d'accélérateur enfoncée lorsque vous êtes en l'air, en retombant vous pourriez être amené à casser certaines pièces, ce qui ne serait pas pris en compte au titre de la garantie.

7. **vidanger la durite d'huile (PCV)**

- L'huile de la durite d'huile (Ventilation Positive du Carter) s'accumule dans le filtre à air comme sur la photo ci-joint.
- Enlever la prise de durite et vidanger l'huile tous les 500 km, avant que l'huile ne remplisse pas complètement la durite sinon cela peut affecter les performances du moteur.
- Après la vidange, vérifier que la prise est de nouveau bien clipsée et installée correctement.

8. **NETTOYAGE DE L'ENTREE D'AIR DU VARIATEUR DE TRANSMISSION**
   - Le variateur aspire de l'air frais en continu pour réduire la température intérieure de celui ci.
   - Pour avoir une meilleure longévité des éléments internes tels que la courroie, vous devez vérifier que l'air frais rentre bien, nous vous recommandons de nettoyer tous les 1000 km l'entrée d'air.
   - Nettoyer le à chaque fois que vous irez dans un endroit tout chemin.

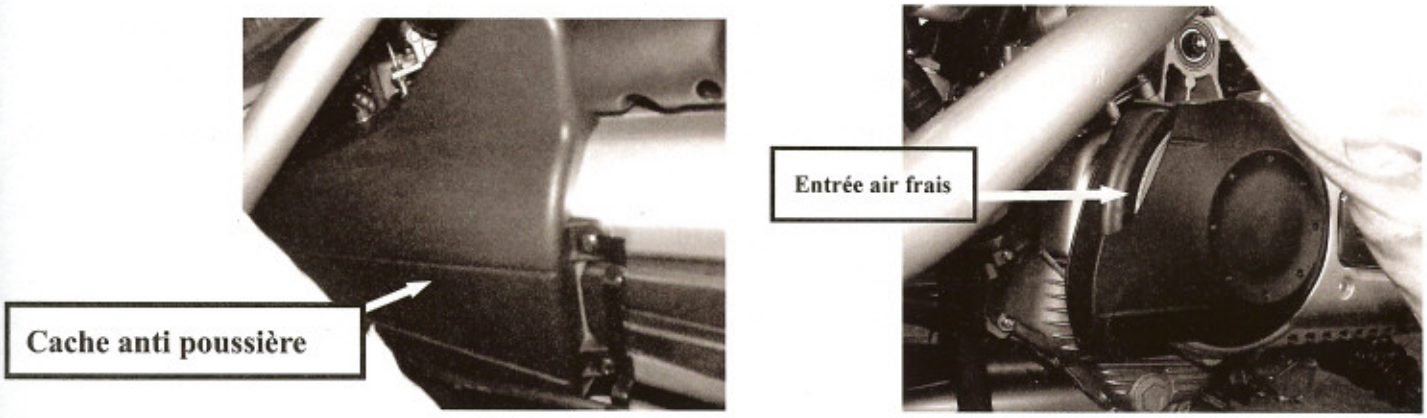

9. **NETTOYAGE INTERNE A LA TRANSMISSION ET VERIFICATIONS**

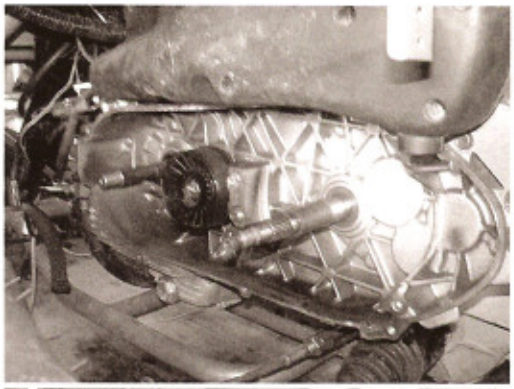

- Les pièces internes sont toutes des pièces d'usure, et doivent donc être vérifiées avec attention
- Nettoyez la poussière, la poudre éventuelle, dans la transmission, …etc. à l'intérieur du variateur tous les 2000~3000 kilomètres.
- Vérifiez la courroie et regardez s'il n'y a pas de craquelures, remplacez si nécessaire.
- Vérifiez le joint tel que montré sur la figure, si nécessaire remplacez ou graissez le.

10. **<u>NETTOYAGE DE FIILRE A AIR :</u>**

Faitez attention au maintien de filter à air, sinon le moteur sera endommagé et la performance s'abaissera grandement!

- Périodiquement, nettoyez le filter à air tous les 1 000km pour utilisation route.
- Nettoyez le filter à air à chaque fois que vous irez dans un endroit tout chemin.

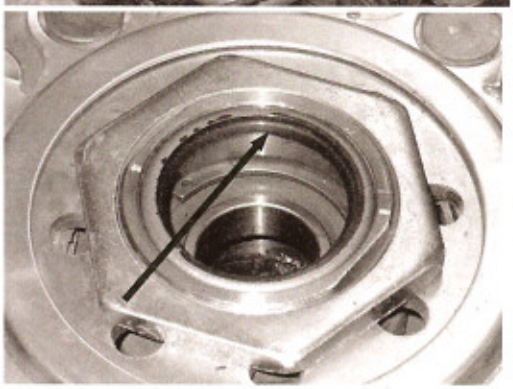

AVAVT-PROPOS

Cher Client,

Merci d'avoir choisi un buggy PGO **Bug Racer 500**. Nous souhaitons que vous preniez beaucoup de plaisir avec ce véhicule. Avant d'utiliser votre buggy PGO nous vous conseillons vivement de lire l'intégralité du manuel d'utilisation car il comporte des informations importantes pour votre sécurité et l'entretien de ce véhicule de loisirs. Ne pas tenir compte de ces informations et instructions pourrait avoir de très graves conséquences.

Il est certain que la longévité de votre buggy va dépendre de la manière dont vous allez l'utiliser et l'entretenir. Ce manuel a donc pour vocation de vous préciser les éléments de base nécessaires à une bonne utilisation et à un bon entretien. Merci de prendre un soin particulier à sa lecture.

Pour toute information complémentaire, merci de bien vouloir contacter le revendeur PGO agréé de votre choix afin que celui-ci puisse vous donner tous les renseignements dont vous pourriez avoir besoin.

Fabriqué par
MOTIVE POWER INDUSTRY CO., LTD.
1ère édition de Juin 2007

PGO
BUILD 4 FUN

LIMITES DE LA GARANTIE PGO POUR BUGGY

Ce feuillet doit être présenté par le concessionnaire PGO à l'acheteur d'un buggy PGO accompagné du carnet de garantie.

Nous proposons les services suivants :

1. POUR OBTENIR LA GARANTIE

A. Garantie effective

a. Après avoir complété toutes les informations contiguës dans le carnet de garantie qui vous a été remis, et que vous aurez obligatoirement pris soin de signer, votre concessionnaire PGO devra retourner la carte d'enregistrement de garantie pour enregistrer votre véhicule auprès des services de l'importateur et de l'usine PGO. Un exemplaire de la carte d'enregistrement restera dans votre carnet de garantie

La garantie couvre le véhicule à condition que le ou les défauts aient été constatés par un concessionnaire PGO agréé, suite à une utilisation privée et uniquement de loisirs, selon les directives du constructeur.

Cette garantie est valable uniquement auprès du réseau de revendeurs PGO agréés.

B. Période de garantie

- La période de garantie est de 2 ans depuis la date de la première facture d'achat et / ou de la mise en circulation du véhicule, provisoire ou définitive, dans la limite de 10 000 km, la première des 2 conditions arrivant à terme, met fin à la période de garantie contractuelle. Quelques composants (*) ne seront garantis que 12 mois ou 5000 km, la première des 2 conditions arrivant à terme, met fin à la période de garantie contractuelle.
- (*) Eléments tels que: colonne de direction ou éléments de direction, amortisseurs, disques de frein, moyeu de frein, transmission, échappement, cardans sont limités à 12 mois et 5 000 km.

2. PROCEDURE DE GARANTIE

a. Le client doit assurer la périodicité de la maintenance du véhicule en suivant les instructions données à ce sujet dans le manuel d'utilisateur, et veiller à ce

que le tableau de maintenance soit rempli à chaque intervention, avec le cachet du concessionnaire.

b. Le concessionnaire doit vérifier la carte de garantie, le tableau périodique de maintenance, et la corrélation de ces éléments avec la carte grise de son client.

c. Seul un concessionnaire PGO agrée peut émettre une demande de prise en charge au titre de la garantie.

3. CE QUI N'EST PAS COUVERT PAR LA GARANTIE

A. Tout ce qui suit n'est pas couvert par la garantie :

- **EFFECTUER DES MODIFICATIONS TEL QUE L'ECHANGEMENT DES CARACTERISTIQUES DU VEHICULES OU DU MOTEUR, DEBRIDAGE, OU POSE DE PIECES NON D'ORIGINES PGO.**
- **VEHICULE UTLISE EN TOUT TERRAIN, COMPETITION, USAGE PROFESSIONNEL OU LOCATION.**
- Défauts causés par un mauvais entretien, stockage ou transport.
- Tout accident causé par des catastrophes naturelles, les guerres, des attentats des actes de vandalisme, d'un incendie, d'un vol, d'une négligence, d'accident dus à un mauvais contrôle humain, d'aggravation de dommage par persistance d'utilisation.
- La rouille de surface, les défauts de peinture suite à un défaut de matière ou de son application, la décoloration, la corrosion, l'altération ou la déformation, dues entre autre, aux produits chimiques aériens, à la sève des arbres, les débris routiers, de dommages ayant pour origine une cause externe au véhicule comme le vent, la tempête, la grêle ,le gel, la foudre et autres conditions atmosphériques, les déjections d'oiseaux ne sont pas couverts par la garantie produit.
- Toute utilisation de pièces détachées ou d'accessoires qui ne sont pas d'origine PGO, l'utilisation de lubrifiant ou de carburant non recommandés.
- Défauts causés par le fait de modifier ou d'enlever des composants ou équipements originaux.
- Toute intervention, montage ou démontage, qui ne respectent pas les règles du carnet de maintenance PGO.
- Ne pas respecter les règles de conduite et la réglementation du code de la route, ne pas respecter les consignes du manuel utilisateur PGO.
- Véhicule conduit par une personne qui n'a pas le permis de conduire approprié.

B. Les dépenses suivantes ne sont pas prise en compte:

(1) Pièces de consommation courante (incluant batterie, ampoules, fusibles, cylindre, piston, segments , bougies, joints, plaquette de frein, embrayage,

courroie, variateur, galets, éléments de filtration d'air, d' huile et d'essence, chaînes pignons couronnes, tendeurs, caoutchouc, pneus, câbles etc.

(2) Matériel de maintenance périodique et d'inspection tel que le carburant, les lubrifiants et fluides, ainsi que les produits de nettoyage.

(3) Tous les coûts annexes à la panne éventuelle du véhicule, les préjudices dus à la perte de jouissance du véhicule, à l'indisponibilité humaine ou matérielle, les frais annexes ou dommages résultant directement ou indirectement des éléments externes comme de communication, téléphone et autres, de dépannage, de remorquage, de rapatriement humain ou matériel, de restauration, d'hôtel, de transport, ou de location, de stationnement, de stockage, de détériorations causées à d'autres biens.

(4) Ainsi que tout ce qui se rapporte en détail dans le carnet de garantie livré avec votre véhicule.

4. INTERRUPTION DE LA PERIODE DE GARANTIE

En cas d'intervention entrant dans le cadre de la garantie, le client est tenu de présenter son véhicule chez un revendeur PGO agréé dans les plus brefs délais afin d'éviter l'aggravation des défauts qui demanderaient une intervention plus importante que celle prévue au départ. Les interventions réalisées au titre de la garantie n'ont pas pour effet de prolonger celle-ci. Toutefois, en cas d'immobilisation au titre de la garantie qui ne serait pas le fait du client, la garantie contractuelle pourrait sur sa demande être prolongée d'autant.

PGO se réserve le droit de procéder à des modifications ou améliorations sur certains modèles ou véhicules sans avis préalable ; PGO n'est en aucun cas tenu d'effectuer ces modifications ou améliorations sur les véhicules déjà vendus.

5. SI UN CHANGEMENT IMPORTANT OU RAPPEL EST ORGANISE PAR PGO, PGO OU SON REPRESENTANT EN France CONTACTERA SON RESEAU DE CONCESSIONNAIRES POUR EFFECTUER LES OPERATIONS DE RAPPEL, DE CONTROLE, ET DE MODIFICATION EVENTELLE, MAIS NE PREVIENDRA PAS A CHAQUE CLIENT INDIVIDUELLEMENT.

STICKER

Cette partie présente quelques unes des informations et recommandations les plus importantes pour vous aider à conduire votre buggy en toute sécurité. Veuillez prendre un moment pour lire ces pages.

Les étiquettes doivent être considérées comme des éléments permanents du buggy. Si une étiquette se détache ou devient difficile à lire, contactez votre revendeur pour remplacer les étiquettes d'avertissement.

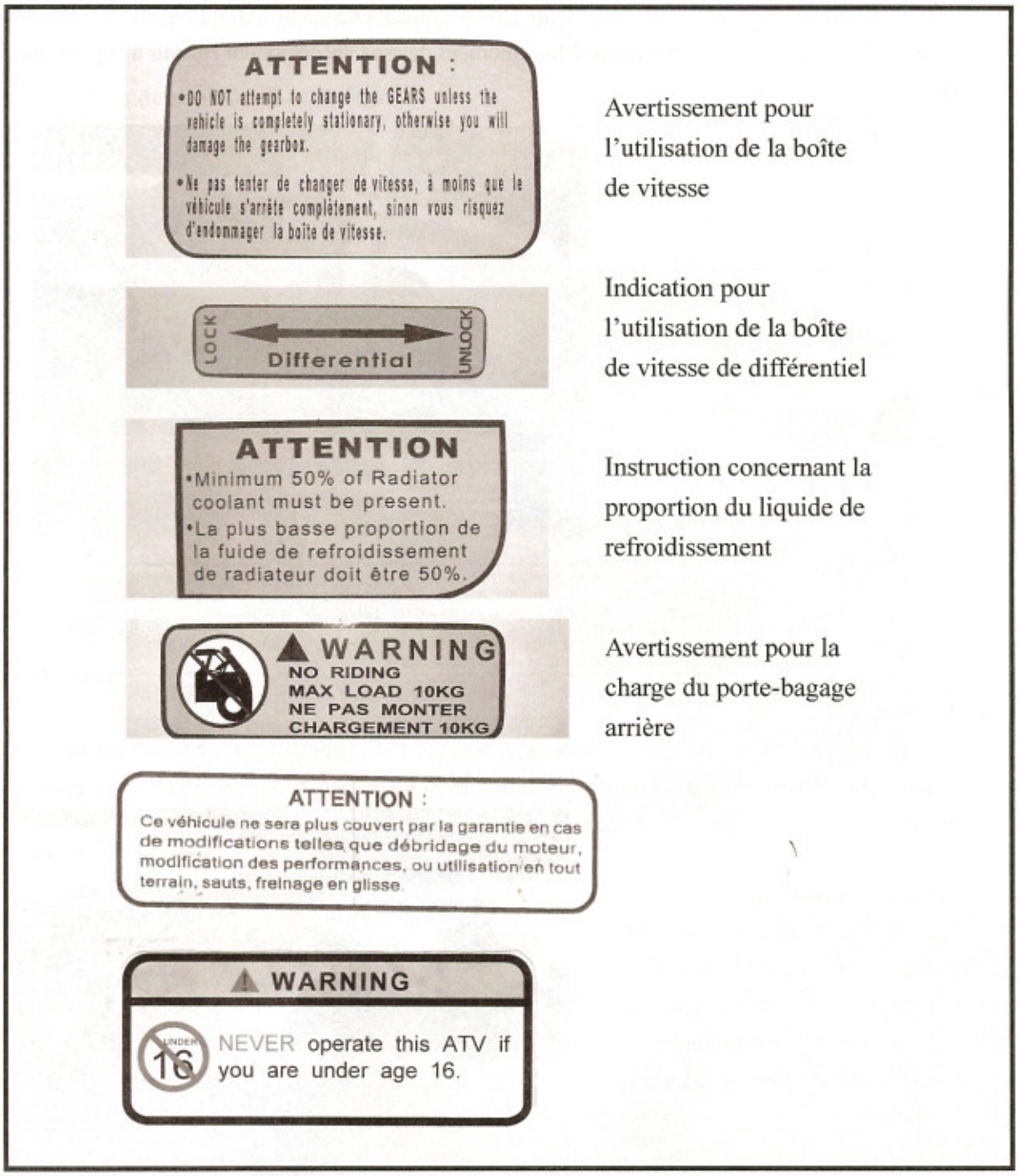

Avertissement pour l'utilisation de la boîte de vitesse

Indication pour l'utilisation de la boîte de vitesse de différentiel

Instruction concernant la proportion du liquide de refroidissement

Avertissement pour la charge du porte-bagage arrière

OPERATION

A. Commandes d'utilisation

AVERTISSEMENT- N'essayez pas de démarrer ou d'utiliser le véhicule avant d'être complètement familier avec l'emplacement et l'utilisation de chaque commande nécessaire au fonctionnement de ce véhicule. L'utilisateur doit savoir comment arrêter cette machine avant de la démarrer et de la conduire.

a. L'accélérateur

La pédale de droite est l'accélérateur qui contrôle la vitesse du buggy. Lorsque la vitesse du moteur augmente juste au-dessus du ralenti, l'embrayage s'enclenche automatique et le véhicule avance. Pour désengager l'embrayage à tout moment, laissez l'accélérateur revenir à la position de ralenti.

(Voir Fig. droite)

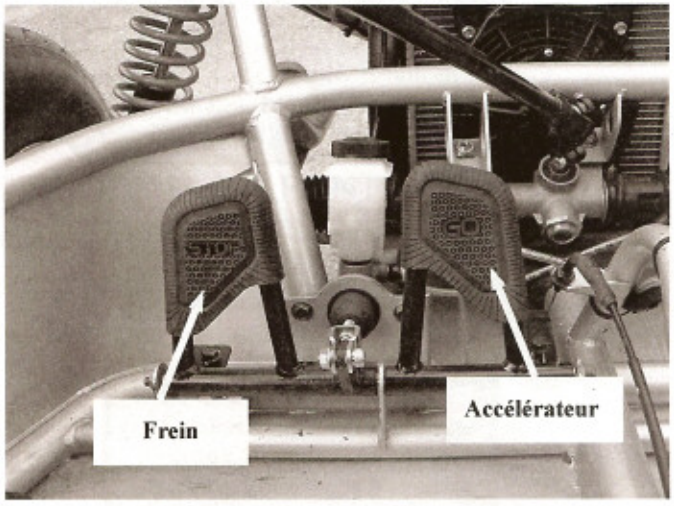

A chaque fois avant de démarrer le moteur, vérifier le mécanisme de l'accélérateur pour garantir que le mécanisme fonctionne normalement lorsque la pédale est poussée à fond vers l'avant et que la pédale revient au ralenti. Si le problème ne se corrige pas grâce à la lubrification, la pièce de liaison ne revient pas au ralenti. Si le problème ne se corrige pas grâce à la lubrification, l'ajustement ou le remplacement des composants usés, demandez de l'aide à votre revendeur.

b. Le frein

Le frein est situé sur le côté gauche du buggy (Voir Fig.1). L'application d'une pression sur la pédale étire l'étrier de frein autour de la pompe à frein sur la roue arrière et ralenti ou stoppe le buggy.

c. Démarrer le moteur

1. Insérez la clé de contact dans le démarreur, poussez la pédale de frein et tournez la clé dans le sens des aiguilles d'une montre, relâchez la clé lorsque le moteur démarre.
2. Le moteur chauffera pendant 5

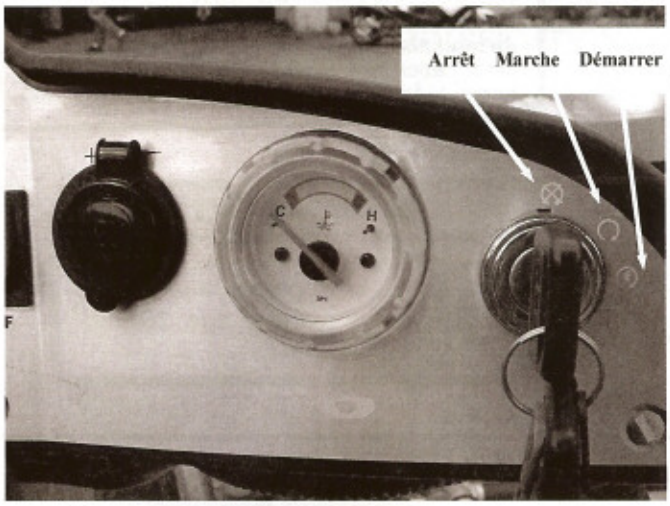

minutes et l'étranglement du moteur s'arrêtera automatiquement.

3. N'activez pas le démarreur plus de 5 secondes à chaque fois.

Assurez-vous que le levier de vitesse est en position **"N"**, sinon vous ne pourrez pas démarrer le moteur.

d. Bouton Feux de détresse

Important- Test des feux de détresse.

Avant de conduire ce véhicule, testez les feux de détresse pour vous assurer qu'il fonctionne correctement. Avec la clé de contact sur Marche, poussez et maintenez le bouton feux de détresse pendant deux secondes pour que les lampes de signal clignotent.

d. Panneau de contrôle du BR-500

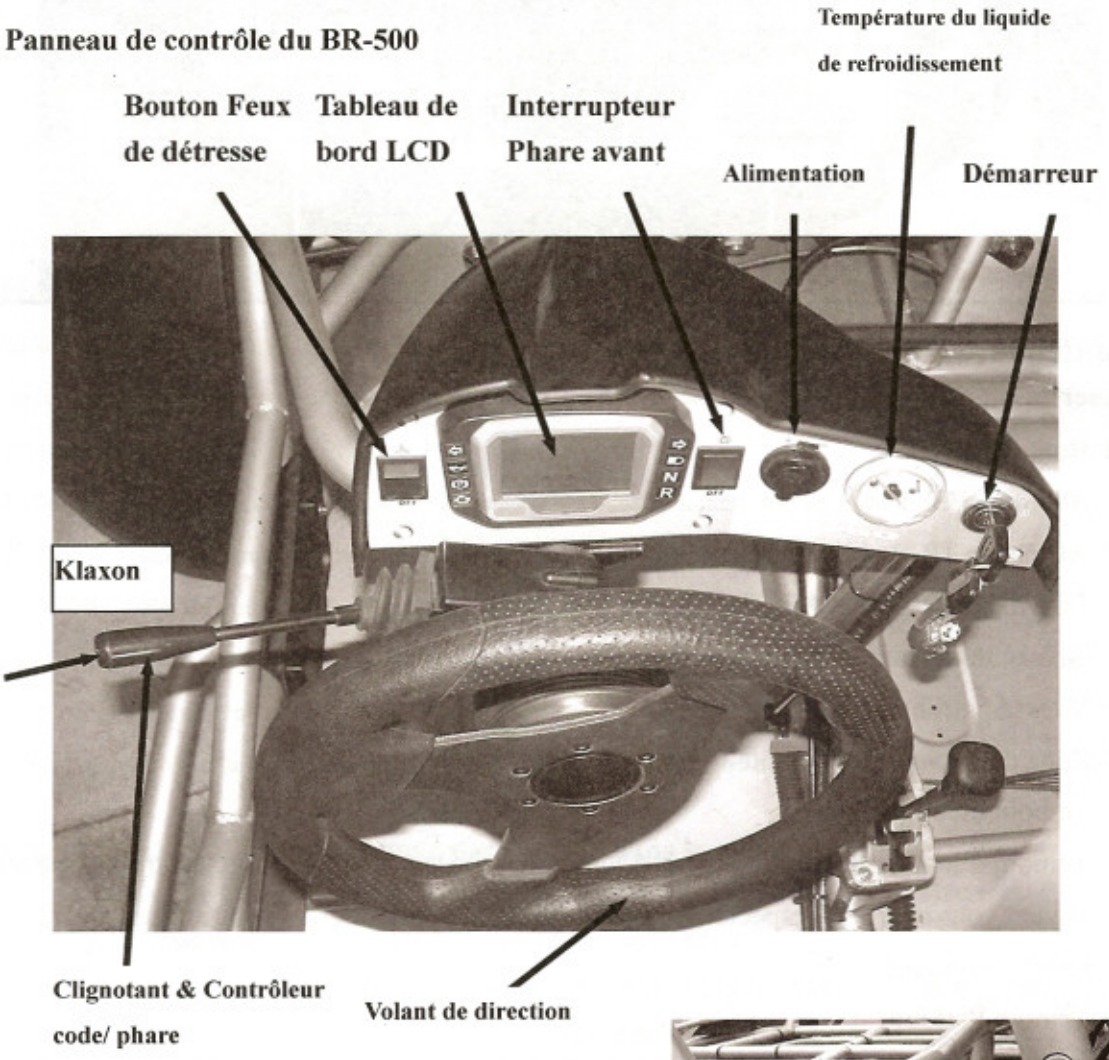

e. Bouchon du réservoir de carburant

Le bouchon du réservoir est situé sur le côté arrière droit du buggy, insérez la clé et tournez-la dans le sens des aiguilles d'une montre pour ouvrir le bouchon, remplissez uniquement avec du carburant sans plomb indice 95 (indice 98 non préconisé mais accepté).

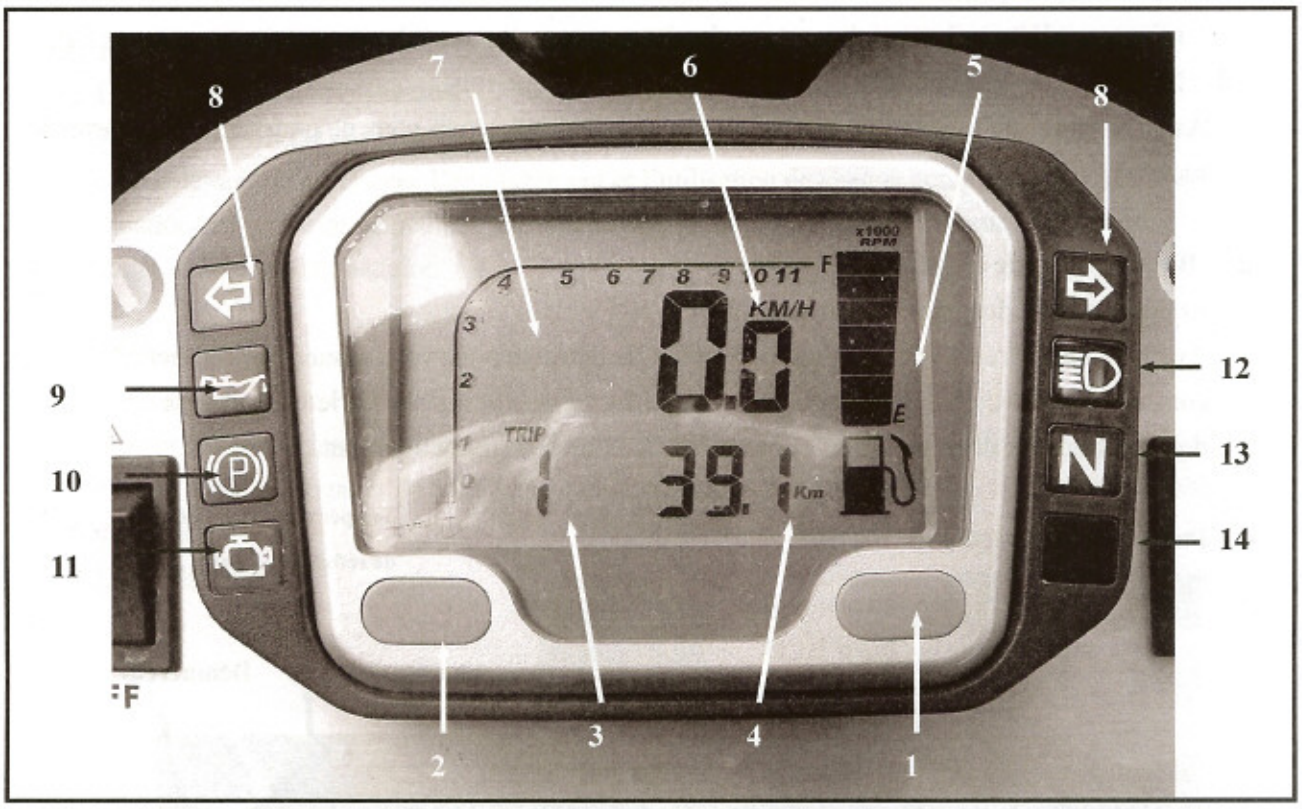

g. Compteur LCD numérique

1.Description des symboles

(1) Bouton MODE

(2) Bouton RESET

(3) Affichage TRIP : kilomètres ou miles

(4) COMPTEUR KILOMETRIQUE : kilomètres ou miles

(5) Niveau de carburant

(6) Vitesse : km/h ou miles

(7) Zone d'affichage du compte-tours : (* 1,000 tours/min)

(8) Témoin du clignotant

(9) Témoin d'avertissement du niveau d'huile: lorsque la pression d'huile est trop basse, ce voyant vous avertit d'inspecter le niveau d'huile du moteur et de vous arrêter immédiatemement.

(10) Témoin Parking

(11) Témoin d'alerte : lorsque ce témoin est allumé pendant la conduite, vous devez inspecter le moteur dès que possible.
(Exclure l'auto-test initial après avoir mis la clé de contact sur Marche!)

(12) Témoin Feux de route

(13) Témoin Levier de vitesse sur Neutre: vous pouvez démarrer le moteur uniquement dans cette position.

(14) Témoin Levier de vitesse sur Marche arrière

2. Configuration:

Appuyez sur "**MODE + RESET**" pendant 2 sec., puis vous pouvez accéder à la procédure de configuration.

①Utilisation des boutons

Situation / Bouton	Paramètres	Menu principal
B. MODE	↓ : vers le paramètre suivant ▼2: quitter	↓ : change l'affichage
RESET	↓ : nombre + 1 ▼2: pas de fonction	↓ : pas de fonction ▼2: Réinitialiser RT, MAX, TRIP
MODE + RESET	Pas de fonction	▼2: configuration paramètre

- 『↓』 signifie appuyez sur le bouton une fois.
- 『▼2』 signifie appuyez sur le bouton et maintenir appuyé 2 secondes.
- Si aucune pression d'aucun bouton pendant 75 sec., il retournera au menu principal automatiquement.

②**Unité**: km/h ou mile/h, change par **RESET**, et **MODE**(2 sec) pour confirmer

③**Périmètre de roue (C)** : de 1 à 3999 mm, 4 chiffres individuellement défini par **RESET** pour augmenter un par un, et **MODE**(2 sec) vers le nombres suivant. Finalement, appuyez sur **MODE** 2 sec. pour quitter la configuration; **la valeur par défaut est 2155** pour BR-500. Si c'est pas le cas, veuilllez régler la valeur à 2155 vous-même.

④**12/24**: affichage de l'heure, si vous sélectionnez "12", alors il affichera AM ou PM.

⑤**rpm**: Avertisseur de limite de haute vitesse du moteur

En accélérant pour changer l'avertissement de vitesse, et appuyez sur **RESET** pour entrer ce paramètre; ci-après lorsque le moteur atteint la vitesse, l'affichage rpm clignotera pour vous avertir de réduire la vitesse du moteur.

⑥**SPC**: Paramètre d'allumage du moteur (0.5/1.0/1.5/2.0), **la valeur par défaut est 2.0**.

3. Description de l'affichage: changé par MODE dans le menu principal.

- SPD: vitesse réelle, KM/H ou MPH changé par le bouton RESET.
- TRIP: distance parcourue depuis le dernier RESET, appuyez sur RESET pour remettre à zéro.
- MAX: vitesse maximale depuis le dernier RESET, appuyez sur RESET pour remettre à zéro.
- RT: durée de fonctionnement depuis le dernier RESET, appuyez sur RESET pour remettre à zéro.
- AVG: vitesse moyenne depuis le dernier RESET, appuyez sur RESET pour remettre à zéro.
- MAX RPM: vitesse maximale du moteur depuis le dernier RESET, appuyez sur RESET pour remettre à zéro.
- ODO: distance accumulée depuis que ce compteur kilométrique a été utilisé, il ne peut pas être réinitialisé.
- TT: durée de fonctionnement depuis que ce compteur kilométrique a été utilisé, il ne peut pas être réinitialisé.

h. Avertissement du liquide de refroidissement

Lorsque l'indicateur atteint la zone **ROUGE**, cela vous avertit que la température du liquide de refroidissement est trop élevée, vous devez arrêter le moteur et laisser refroidir la température immédiatement.

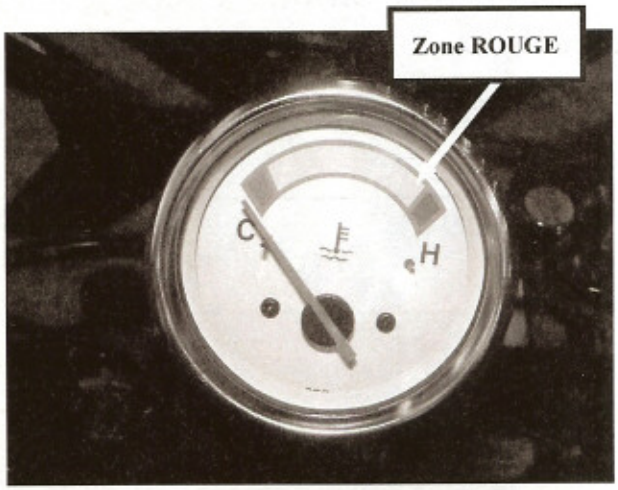

B. Inspection avant de conduire

Effectuez cette inspection à chaque fois avant conduire le véhicule. Si ce n'est pas fait, vous encourrez de sérieux dommages du véhicule ou dommages corporels.
Suivez toujours les règles de sécurité et portez un casque.

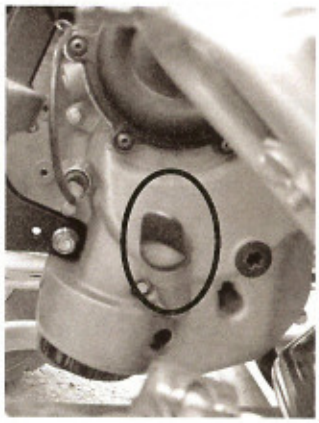

a. Contrôlez le Niveau d'Huile du Moteur. Vérifiez qu'il n'y a pas de fuites, ajoutez de l'huile si nécessaire.
b. Contrôlez le Niveau de Carburant. Ajoutez du carburant si nécessaire et ne faites pas déborder le réservoir. Vérifiez qu'il n'y a pas de fuites.
c. Contrôlez le liquide de refroidissement du moteur, ajouter du liquide si nécessaire et vérifiez qu'il n'y a pas de fuites.
d. Contrôlez les freins. Actionnez la pédale de frein plusieurs fois, puis vérifiez le fonctionnement correct de la pédale de frein. Assurez-vous qu'il n'y a pas de fuite du liquide de frein. Ajoutez du liquide si nécessaire.
e. Contrôlez les pneus. Vérifiez l'état et la pression des pneus.
f. Contrôlez l'accélérateur. Vérifiez la souplesse du fonctionnement. Assurez-vous que l'accélérateur revient bien au ralenti.
g. Contrôlez le bouton Parking. Effectuez un test du bouton. Réparez si nécessaire.
h. Contrôlez écrous, boulons, et clips. Vérifiez les roues pour voir si tous les écrous de l'axe et des roues sont serrés correctement. Vérifiez et resserrez si nécessaire tous les autres clips suivant la condition spécifiée.
i. Contrôlez la Barre de la Cage de Protection. Assurez-vous que toutes les barres de protection de la cage sont en place avant d'utiliser le buggy.
j. Contrôlez les feux de stop. Vérifiez le bon fonctionnement.
k. Contrôlez les Roues. Vérifiez le serrage des écrous des roues de des axes; vérifiez que les écrous de l'axe sont fixés par des clavettes.
l. Contrôlez la Direction. Vérifiez le bon fonctionnement et vérifiez s'il y a le moindre jeu inhabituel.

C. Emplacement des composants

1. Le Numéro d'Identification du Véhicule VIN (Vehicule Identification Number) est imprimé sur le coté droit de la structure.

REMARQUE:

Les 9 premiers chiffres sont le type, les 8 derniers chiffres sont le numéro de série de production.

Votre revendeur a besoin de ce numéro pour commander des composants, veuillez leur écrire le numéro du moteur pour référence.

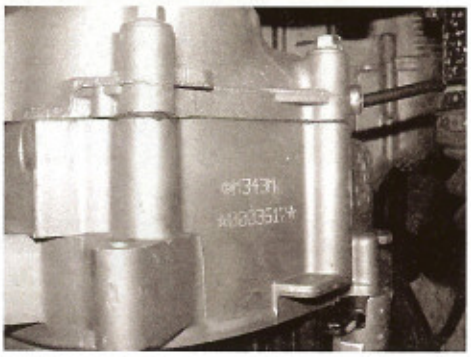

2. No. du Moteur est imprimé sur le côté arrière du bloc moteur gauche.

REMARQUE:

La ligne supérieure est le type du modèle, la ligne inférieure est le numéro de série de production.

Votre revendeur a besoin de ce numéro pour commander des composants, veuillez leur donner le numéro du moteur pour référence.

3. Emplacement des composants de base

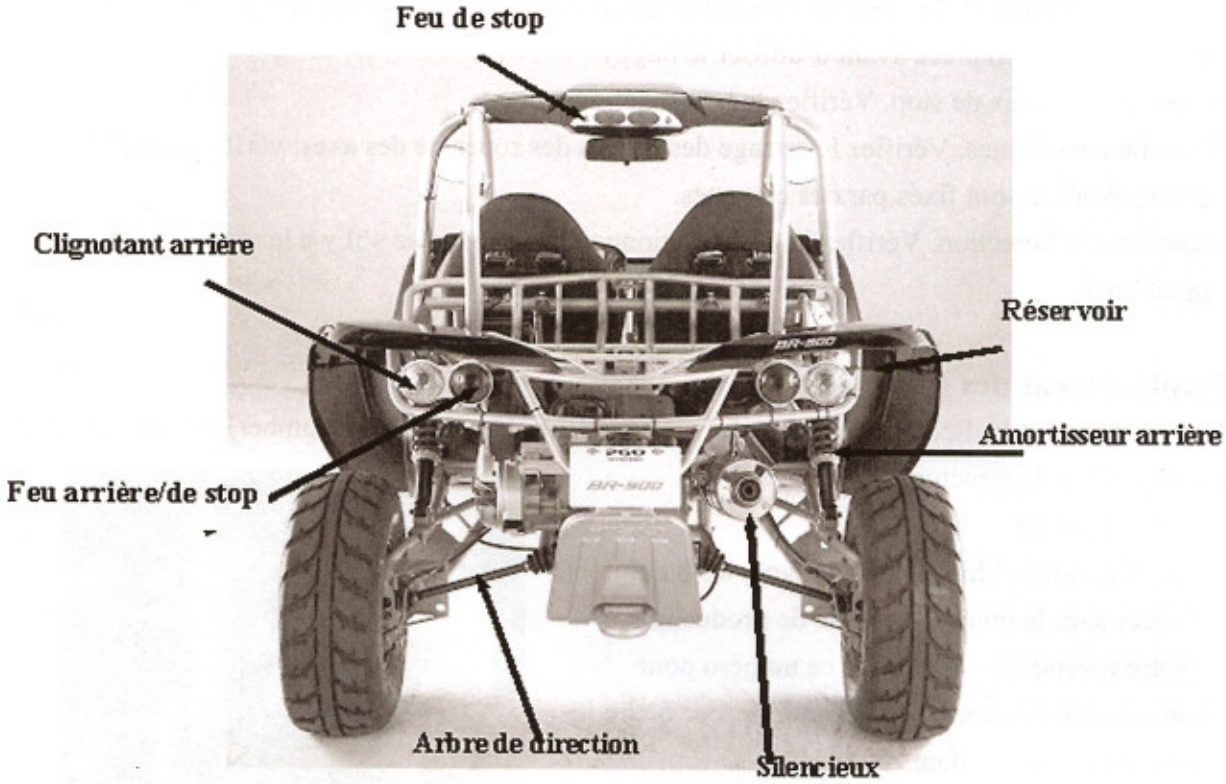

D. Passagers

Le véhicule accueille uniquement deux passagers. Le poids maximum combiné du conducteur et du passager ne doit pas excéder 180kg ou 400lbs.

E. Ajustement du siège

Le siège doit toujours être solidement fixé dans la meilleure position pour que le conducteur puisse contrôler les pédales, le volant de direction, et la clé de contact d'arrêt d'urgence.

a. Tirez la poignée d'ajustement du siège vers le haut pour désengager la glissière du siège.
b. Déplacez le siège sur la position souhaitée.
c. Assurez-vous que la poignée d'ajustement du siège se réenclenche et que le siège est bloqué en position.

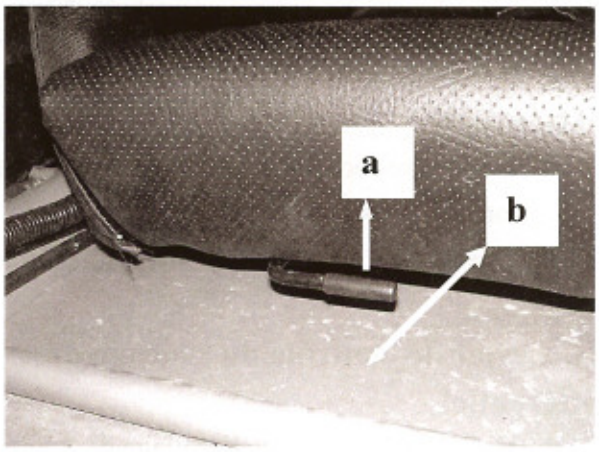

Avant d'essayer d'ajuster le siège, assurez-vous que le moteur du buggy est arrêté.
N'utilisez jamais ce buggy lorsque le siège n'est pas solidement fixé, ou vous pourriez subir de sérieux dommages corporels ou perdre la vie. Avant d'essayer d'ajuster le siège, assurez-vous que le moteur du buggy est arrêté.

F. Commandes pour la conduite

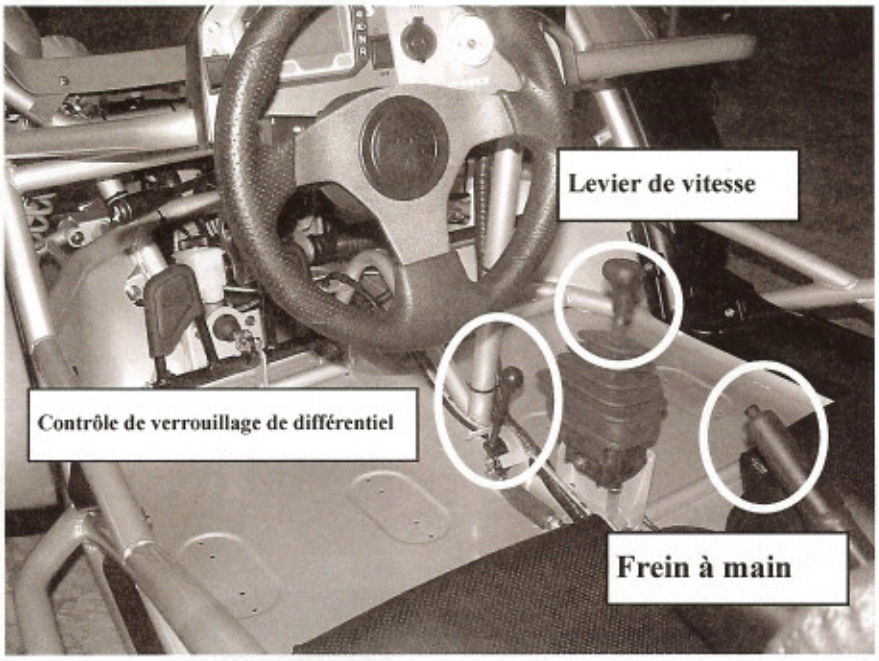

Quand vous mettez le levier sur "R", vous devez freiner (avec la pédale de frein) simultanément, sinon le moteur s'arrêtera automatiquement pour votre sécurité.

G. Levier de vitesse

- L: Plage de faible vitesse, généralement utilisé dans des conditions hors route.
- H: Plage de vitesse rapide, généralement utilisé dans des conditions sur route.
- N: Neutre, vous pouvez uniquement démarrer le véhicule dans cette position.
- R: Marche arrière

Attention!

- Pour votre sécurité, restez en position "N" lorsque vous arrêtez le buggy.
- Changez de vitesse uniquement lorsque le kart est stationnaire dans l'intérêt de la machine.

H. Levier de contrôle du blocage de différentiel

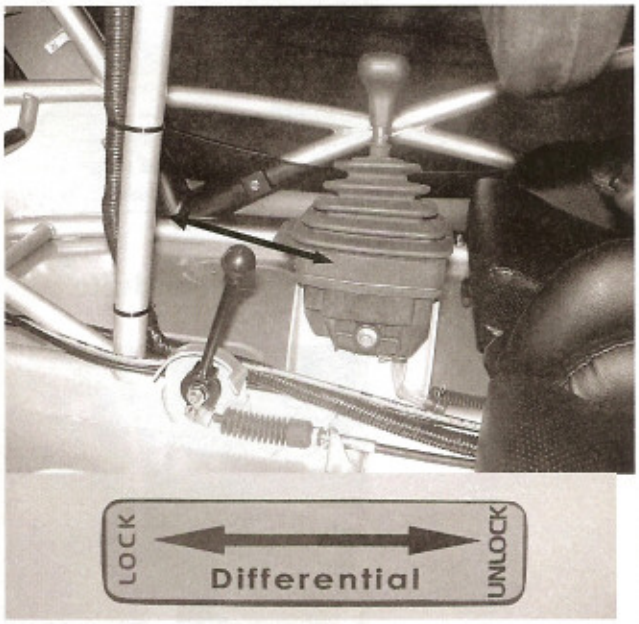

- VERROUILLE (LOCK): Plage de faible vitesse, généralement utilisé dans des conditions hors route.
- DEVERROUILLE (UNLOCK): Plage de vitesse rapide, généralement utilisé dans des conditions sur route.
- Changez de vitesse uniquement lorsque le kart est stationnaire dans l'intérêt de la machine.

I. Parking

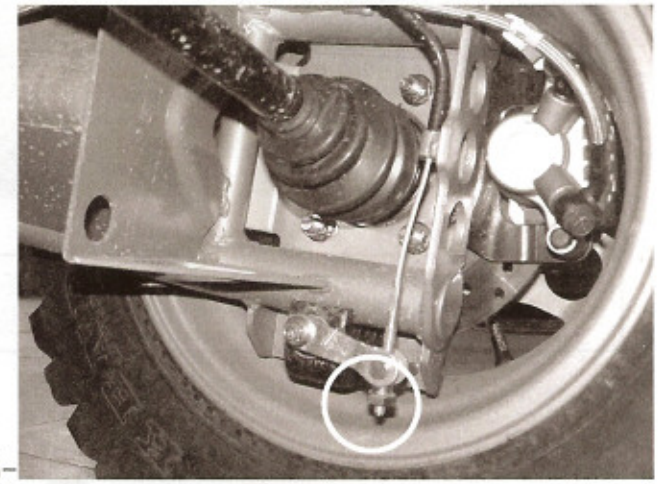

- Tirez le frein à main pour garer le véhicule.
- En position Parking, le véhicule ne peut pas bouger manuellement.
- Si la force de freinage de parking n'est pas suffisante, vissez l'écrou (comme montré sur la figure) pour ajuster la force.

J. Instruction de Démarrage et d'Utilisation

a. Avant de démarrer le moteur, assurez-vous que le conducteur est correctement assis dans le buggy avec sa ceinture de sécurité.
b. Tester le buggy dans un grand espace au début pour apprendre comment démarrer, tourner et arrêter.
c. Conduisez le buggy lentement jusqu'à ce que vous soyez familiarisé avec.
d. L'angle de braquage de direction de ce buggy est court et précis, ainsi la force centrifuge est très élevée lorsque vous prenez un virage à haute vitesse. Ralentissez lorsque vous tourner pour éviter que le buggy ne se retourne.
e. Pour éviter que le véhicule ne se retourne, assurez-vous de tourner uniquement à une vitesse plus lente.

ENTRETIEN

A. SYSTEME DE REFROIDISSEMENT

ATTENTION: Effectuez l'entretien du système de refroidissement UNIQUEMENT quand le moteur est FROID !

Réservoir

- Inspection du niveau du liquide de refroidissement:
  1. Contrôlez le niveau du liquide de refroidissement du réservoir. Si le niveau est en dessous du minimum, remplissez le réservoir jusqu'au maximum
  2. Liquide de refroidissement recommandé: (La proportion minimum doit être supérieure à 30% de liquide de refroidissement) + (eau distillée).

- Remplacement du liquide de refroidissement: (au moins tous les 2 ans)
  1. Evacuation du liquide de refroidissement:
     a. Retirez le boulon de vidange du moteur.
     b. Retirez le tuyau d'arrivée du radiateur avant.
     c. Réinstallez le boulon de vidange et le tuyau d'arrivée du radiateur avant.
  2. Remplissez d'abord le radiateur avec le mélange spécifié du liquide de refroidissement lorsque le moteur est arrêté.
  3. Démarrez ensuite le moteur et gardez-le au ralenti, remplissez le liquide de refroidissement jusqu'à ce que l'écoulement soit régulier et sans bulles.
  4. La capacité totale est (étape 2 & 3) d'environ 3.5 litres.

Tuyau d'arrivée du radiateur

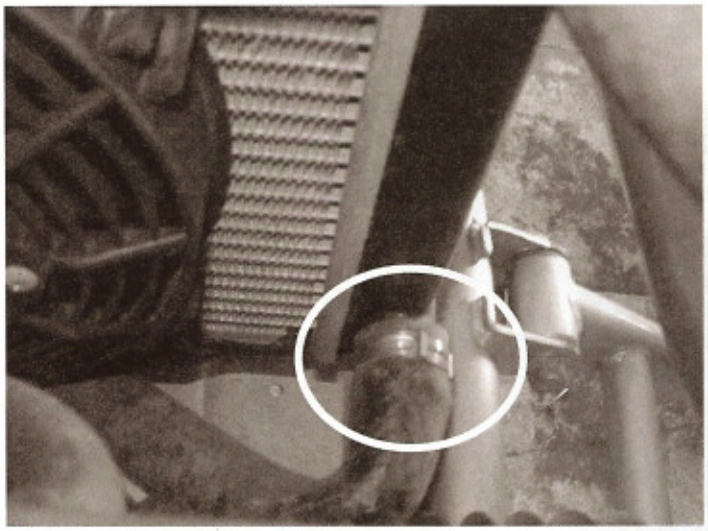

Vidange du liquide du moteur

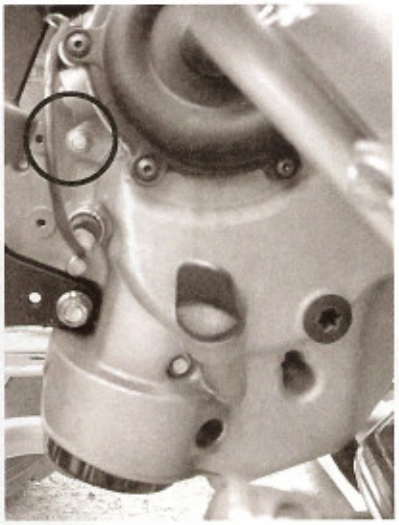

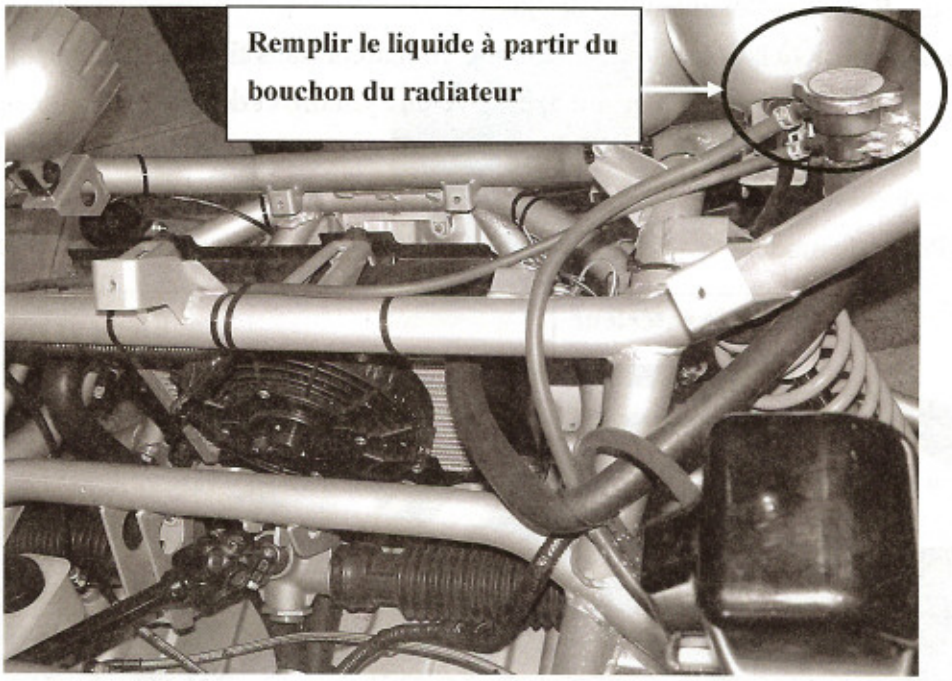

B. ENTRETIEN DU FILTRE A AIR

1. Effectuez l'entretien du filtre à air tous les 1,000 kilomètres (approximativement 2 mois).

   Remarque: l'entretien se fait plus souvent lors d'utilisation en environnements poussiéreux.

2. Procédure
   - Desserrez les 9 vis de fixation.
   - Retirez le couvercle du filtre à air.
   - Retirez l'élément du filtre à air.
   - Nettoyez le filtre éponge avec de l'air comprimé.
   - Vérifiez le tuyau d'échappement et videz-le s'il est plein.

3. Nettoyage
   - L'élément du BR-500 est de type spongieux, cela signifie que vous pouvez le conserver pour des usages multiples.

   a. Lavez le filtre éponge avec de l'eau et du shampoing.
   b. Séchez par petits jets d'air comprimé et un chiffon propre.
   c. Imprégnez avec une mixture HUILE POUR FILTRE À AIR SELENIA, 50% de carburant et d'huile.
   d. Laissez l'élément de filtrage s'écouler et pressez-le avec vos mains sans le comprimer.

e. Replacez l'élément de filtrage.

Attention: Ne laissez jamais le moteur en marche sans filtre à air. Ceci causerait une usure excessive du cylindre et des pistons et endommagerait l'injecteur.

4. Photo de modèle

Couvercle extérieur

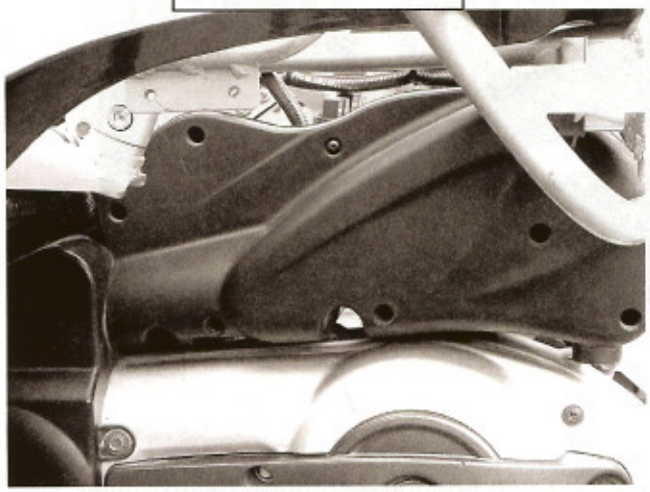

Elément spongieux

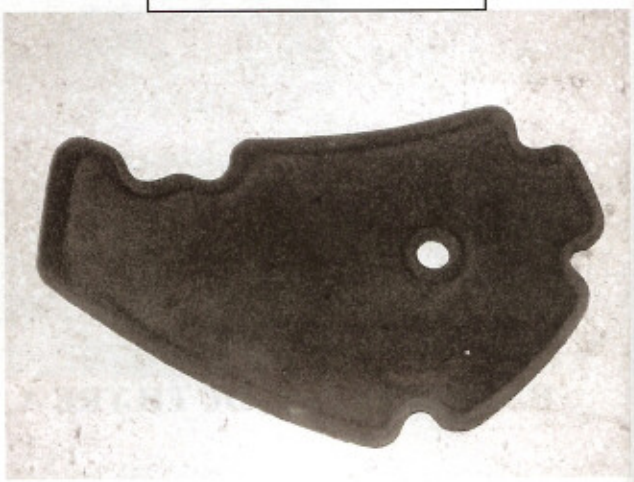

C. ENTRETIEN DE L'HUILE ET DU FILTRE DU MOTEUR

➢ **Remplacer l'huile du moteur:** Vous devez changer l'huile dans le bloc moteur après les premiers 1,000 kilomètres d'utilisation. Ceci assurera une lubrification correcte des composants internes et évitera des réparations coûteuses dues à une usure excessive.

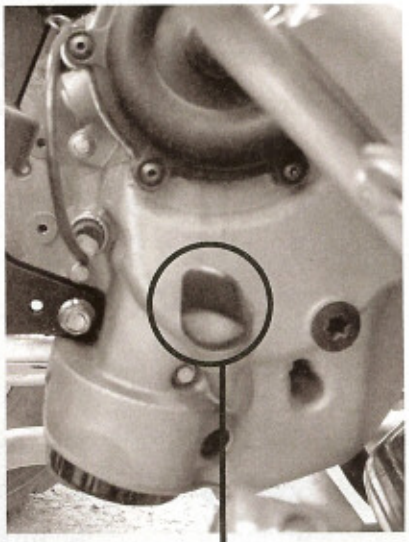

1. Démarrez le moteur, et laissez-le chauffer pendant 3 minutes, puis stoppez-le.
2. Après environ 5 minutes, retirez le bouchon de la jauge à huile, évacuez l'huile du moteur.
3. Retirez et nettoyez le filtre et le boulon de vidange.
4. Remplissez approximativement 1,7 litres avec de l'huile de moteur lorsque vous remplacez le filtre à huile.

(Remplissez uniquement 1,5 litres d'huile lorsque vous ne remplacez pas le filtre à huile.)

5. Répétez les étapes 1 à 2, vérifiez la jauge à huile, assurez-vous que le niveau d'huile est entre MAX et MIN.

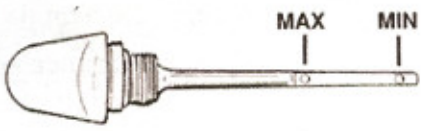

6. Vérifiez le niveau d'huile avant chaque utilisation du buggy ou tous les 1 000 kilomètres de fonctionnement. Ajoutez de l'huile pour atteindre un niveau correct. Ne mixez pas différents types d'huile.

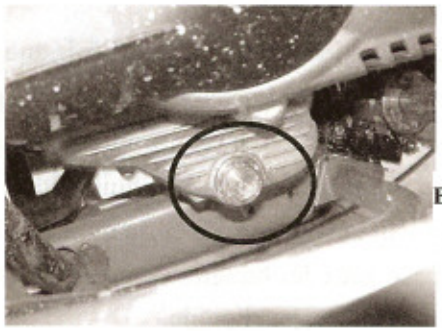

Boulon de vidange

➢ **Replace le filtre à huile du moteur:**

1. Utilisez une clé pour retirer le filtre à huile.
2. Assurez-vous que les joints O-ring de préfiltre et filtre à huile ne sont pas usés.
3. Lubrifiez le joint O-ring et replacez le filtre en filet et le filtre à huile, serrez avec le couple ci-dessous:
   - Boulon de vidange d'huile de moteur: 24~30 N-m
   - Filtre à huile: 12~16 N-m
4. Remettez un nouveau filtre à huile après lubrification du joint O-ring, puis vissez-le pour toucher le joint et serrez plus fort au couple recommandé.

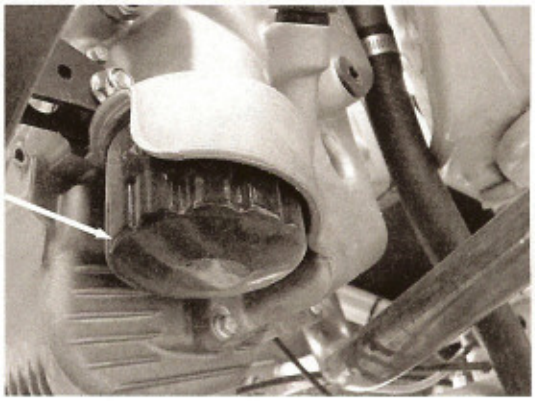

D. ENTRETIEN DE L'HUILE DE BOITE DE VITESSE

- Veuillez changer l'huile après les premiers 1 000km, puis il est recommandé de changer l'huile de boîte de vitesse tous les 6 000km.
- Volume de changement régulier: 250 c.c. (SAE 140 TUTELA ZC 90)

Bouchon de remplissage

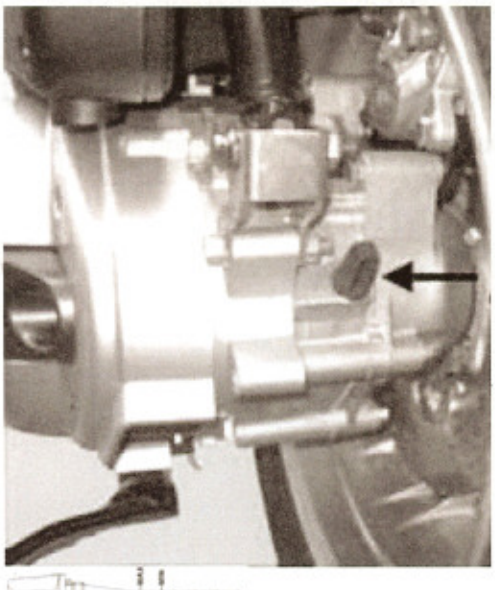

Boulon de vidange d'huile

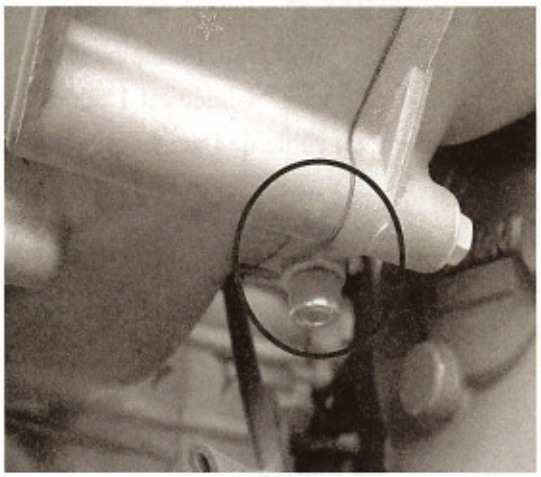

E. Bougie

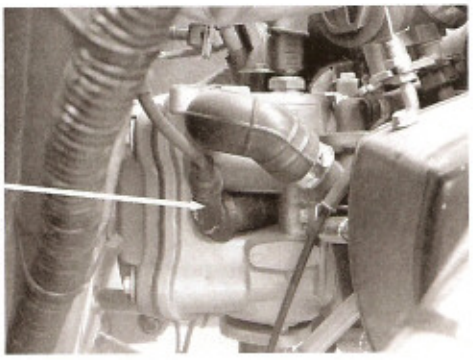

1. Retirez la bougie et inspectez-la chaque fois que vous changez l'huile. (Utilisez une clé à bougie) Les électrodes doivent être conservées propres et sans carbone. La présence de carbone ou l'excès d'huile réduit considérablement les performances du moteur. Si possible, vérifiez l'espace entre les bougies (zone entre les électrodes) en utilisant un jeu de cale à bougie.

   Cette spécification est 0,7~0,8mm.

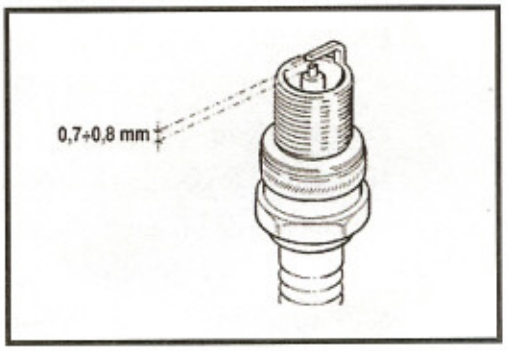

2. Avant d'installer les bougies, enduire légèrement les filetages avec de la graisse graphite si possible, pour faciliter le démontage des bougies lors du prochain entretien.
3. Il est conseillé de remplacer les bougies au moins une fois par an pour garantir un démarrage facile et de bonnes performances du moteur.

F. Ajustement du ralenti

Ne faites jamais d'ajustements inutiles. Les paramètres recommandés par l'usine sont corrects pour la plupart des applications. Pendant ce temps, le ralenti de ce buggy est contrôlé par EMS (Electric Management System), vous n'avez pas à ajuster la vitesse du ralenti. Cependant, vous devez toujours vous assurer du jeu de fonctionnement du câble de l'accélérateur comme suit :

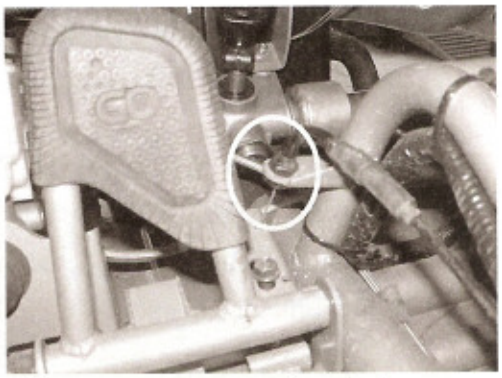

1. Assurez-vous que la section avant est bien verrouillée par l'écrou comme montré sur la figure de droite, ajustez le jeu de fonctionnement en déplaçant l'écrou si nécessaire.
2. Assurez-vous que la section arrière est bien verrouillée par l'écrou comme montré sur la figure ci-dessous, ajustez le jeu de fonctionnement en déplaçant l'écrou si nécessaire.
3. La vitesse du ralenti recommandée est 1 500 RPM (BR-500), pour votre sécurité, assurez-vous du jeu de fonctionnement du câble de l'accélérateur et de son retour instantané au ralenti après relâchement!

G. Instructions de nettoyage

Conservez votre buggy propre. Avec un chiffon propre, essuyez la saleté et l'huile autour des éléments de contrôle. Essuyez l'huile ou le carburant qui s'est répandu. Conservez le moteur propre de tout corps étranger et vérifiez que le ventilateur de la prise d'air est sans débris pour garantir un bon refroidissement.

H. Lubrification du buggy

Lubrifiez le véhicule tous les 3mois.

I. Lubrification de l'arbre d'entraînement

1. Pour augmenter la durée de vie de l'arbre d'entraînement, il doit être lubrifié avec de la graisse à l'intérieur du caoutchouc.
2. Vérifiez le caoutchouc, assurez-vous qu'il n'y a aucune graisse qui en sort. Si le caoutchouc est défectueux, contactez votre revendeur pour en installer un nouveau.

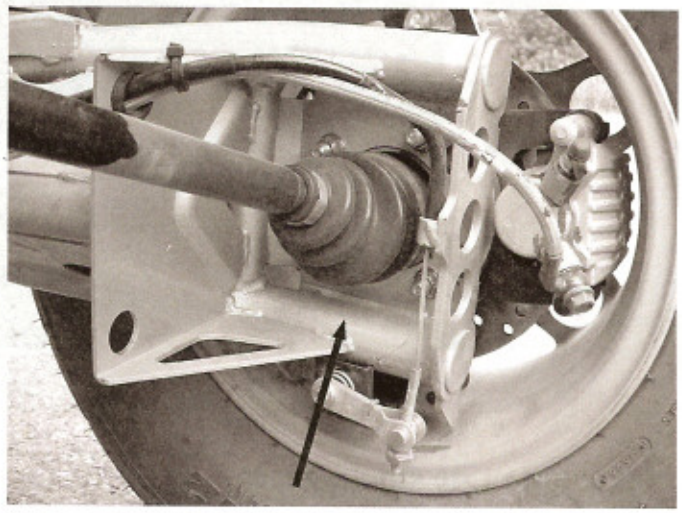

J. Ajustement des amortisseurs avant et arrière

Les amortisseurs peuvent être ajustés en fonction de la charge.

1. Utilisez une clé pour écrou rond pour desserrez l'écrou inférieur.
2. La tension du ressort d'amortissement augmentera quand vous vissez l'écrou supérieur vers la droite, diminuera quand vous vissez vers la gauche.
3. Enfin, serrez l'écrou inférieur.

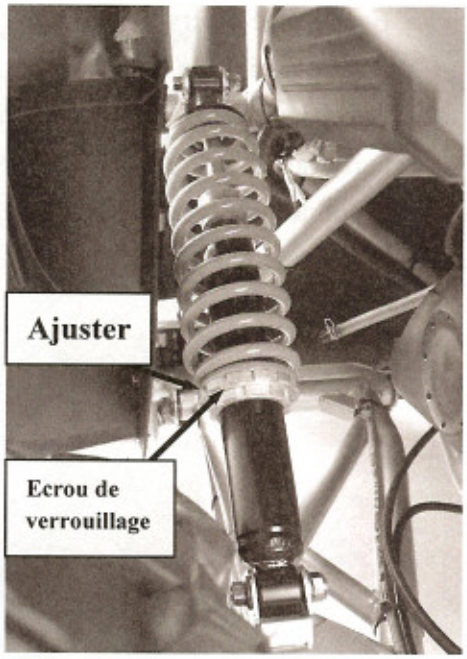

K. Transmission Inverseur

Veuillez changer l'huile d'inverseur tous les 6 000km en utilisant environ 750cc d'huile SAE 80W/90 en qualité mieux que GL3 spécification.

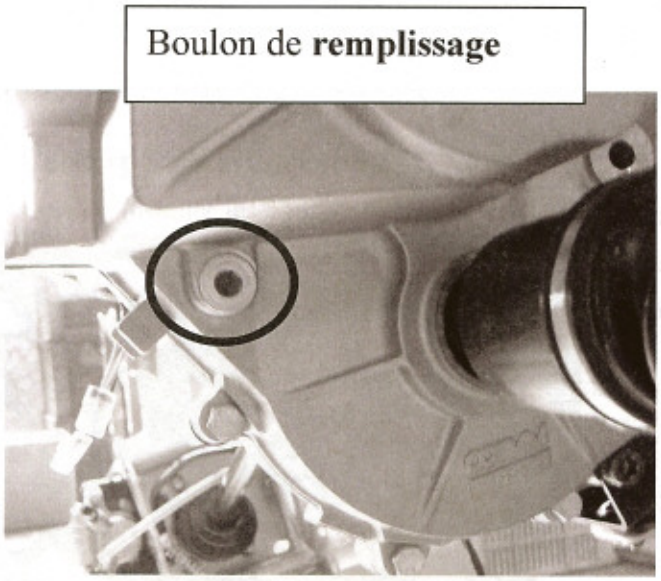

L. Instruction de stockage

Au cas où votre buggy n'est pas utilisé pendant une période supérieure à 30 jours ou à la fin de chaque saison de conduite, préparez le stockage comme suit:

1. Evacuez le réservoir de carburant et les tuyaux de carburant en laissant le moteur en marche jusqu'à ce qu'il n'y ait plus d'essence, et utilisez un stabilisateur de carburant.
2. Lubrifiez le cylindre du moteur en retirant le filtre à air, puis vaporisez de l'huile de moteur à travers le carburateur jusqu'à ce que le moteur s'arrête.
3. N'économisez ou ne stockez pas d'essence pendant l'hiver. L'utilisation de vieille essence, qui a été détériorée par le stockage, causera des démarrages difficiles et affectera les performances du moteur.

M. Remplacement de la roue avant

Ne désassemblez pas les écrous à fente lorsque vous remplacez les roues avant.

Il est uniquement nécessaire de retirer les 4 écrous de roue.

(Voir Figure)Serrez les écrous après remplacement des roues.

N. Remplacement de la roue arrière

Ne désassemblez pas les écrous à fente lorsque vous remplacez les roues arrière.

Il est uniquement nécessaire de retirer les 4 écrous de roue.

O. Alignement de la roue avant

1. Les roues avant ont de ~10mm de pince. Pour contrôler l'alignement, mesurez la distance A et B entre la ligne du centre (CL) des roues. La dimension correcte de pince A doit être supérieure de ~10mm à la dimension B.
2. Pour ajuster les alignements, desserrez les écrous de blocage des deux côtés des barres de liaison avant. Pour rendre la dimension B plus petite, tournez la barre sur la gauche. Ajustez la barre vers la droite pour rendre la dimension B plus grande. Après ajustement de la longueur désirée, serrez l'écrou de blocage contre l'extrémité de la barre.
3. Revérifiez les dimensions pour un alignement correct.

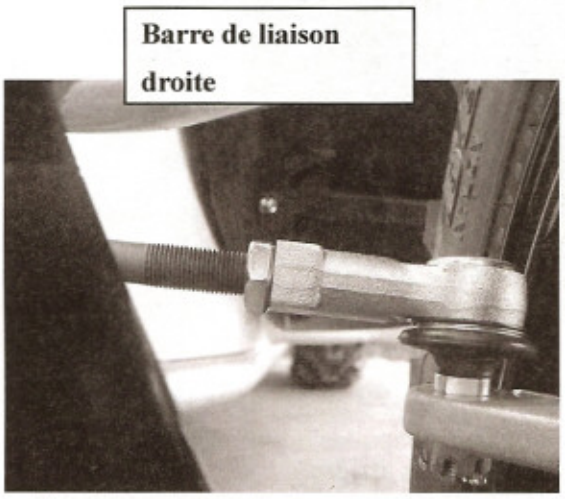

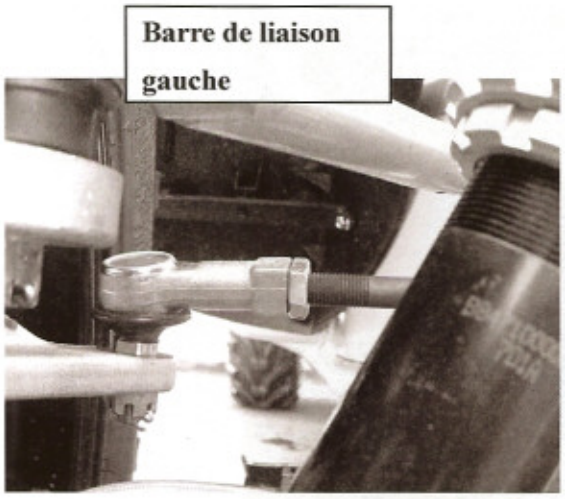

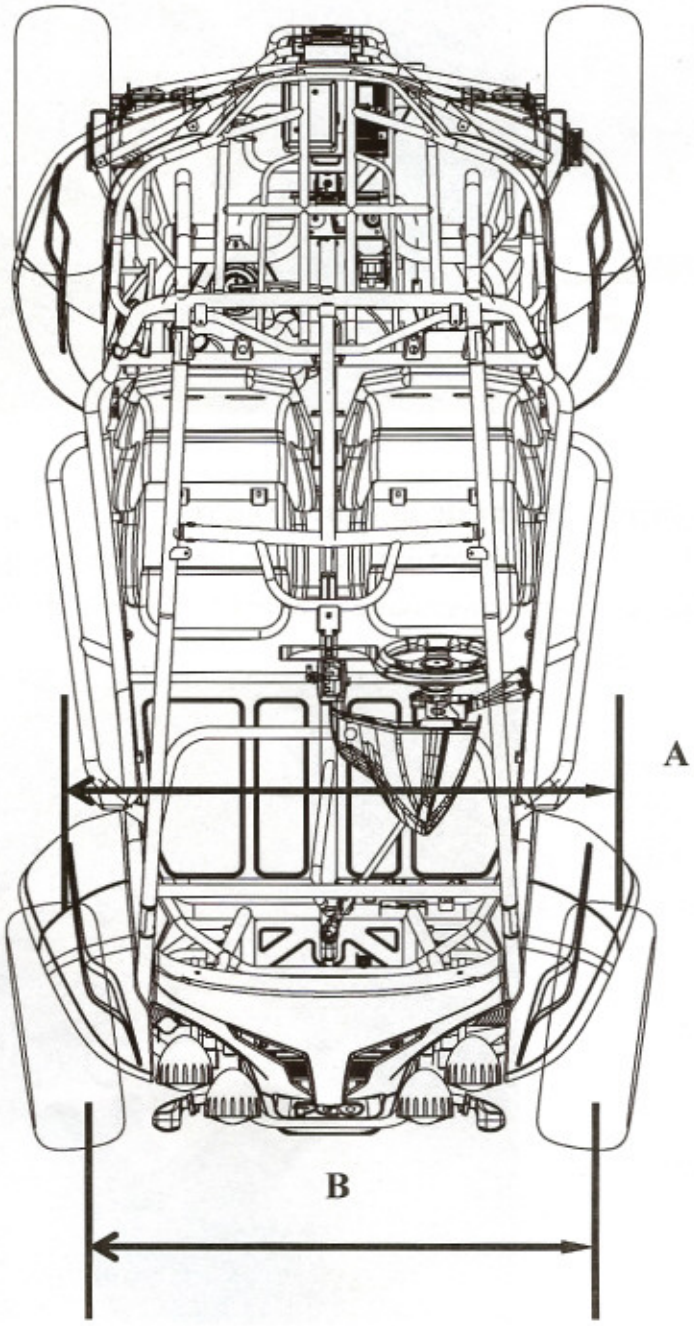

Dans le but d'une conduite en toute sécurité, de bonnes performances et d'une pollution réduite, veuillez effectuer les tâches d'entretien recommandées du tableau suivant, basées sur des conditions de conduite moyenne. La conduite en milieu poussiéreux inhabituel nécessite une maintenance plus fréquente.

1. Tableau de maintenance périodique du BR-500:

Elément	Contenu de la vérification	MOIS/DISTANCE(EN KM)POUR VERIFICATIONS						
		1 ou 1000 km	6 ou 3000k	12 ou 6000k	18 ou 9000k	24 ou 12000k	36 ou 18000k	48 ou 24000k
* Vérifiez le niveau d'huile du moteur	Vérifiez quand le moteur est froid	I	Avant chaque utilisation					
* Huile du moteur	Remplacez 1,500cc quand pas de remplacement du filtre à huile. Remplacez 1,700cc quand remplacement du filtre à huile	R	Remplacement tous les 3 000km ou une fois par an					
* Filtre à huile	Remplacez-le	R	Remplacement tous les 6 000km ou une fois par an					
* Filtre à air	Remplacez-le si nécessaire	I	Remplacement tous les 1 000km ou + si nécessaire					
* Huile de boîte de vitesse	Remplacez avec 250 cc	R	Remplacement tous les 6 000km ou une fois par an					
Performance du frein	Vérifiez les fonctions et les fuites	I	Avant chaque utilisation					
Huile de frein, disque, patin, tuyau, cylindre	Vérifiez l'usure et les fuites ou remplacez si nécessaire	I	Avant chaque utilisation					
Liquide de refroidissement, radiateur, tuyau	Vérifiez les fuites et nettoyez le radiateur si nécessaire	I	Avant chaque utilisation					
* Embrayage	Vérifiez ou remplacez-le si nécessaire		Remplacement tous les 3 000km ou + si nécessaire					
Pneus	Vérifiez l'usure ou remplacez si nécessaire		I	I	I	I	I	I
* Roulement de roue	Serrez étroitement si desserré		I	I	I	I	I	I
* joint CV	Lubrifiez & vérifiez le jeu	I	I	C,A,L	I	C,A,L	I	C,A,L
* Bras de suspension du châssis, fusée	Contrôlez le jeu. Ajoutez de la graisse si nécessaire	I	I	C,A,L	I	C,A,L	I	C,A,L
* Joint de direction & barre	Contrôlez le jeu. Ajustez si nécessaire			I		I		I
* Amortisseur	Vérifiez les fonctions et les fuites	I	I	I	I	I	I	I
Parking	Vérifiez les fonctions ou remplacez si nécessaire	I	I	I	I	I	I	I
Ecrous, boulons, clips	Serrez-les si nécessaire	I	I	I	I	I	I	I
Batterie	Rechargez la batterie si nécessaire. Nettoyez les pôles.	I	I	I	I	I	I	I
* Jeu de soupape	Quand le moteur est froid: BR-500: 0.15mm pour admission 0.15mm pour échappement	Remplacement tous les 6 000km ou une fois par an						
Bougie	Nettoyez ou remplacez si nécessaire		I	I	I	I	I	I
* V belt	Vérifiez l'usure ou remplacez si nécessaire.			I	P	R	I	R
* Système d'approvisionnement du carburant	Contrôle de craquement et d'obstruction. Remplacez-le si nécessaire.		I	I	I	I	I	I
* Ralenti du moteur	1500±50 rpm	A	A	A	A	A	A	A
* Vérification EMS	Vérifiez et réinitialisez le système en se référant à l'inspection EMS	A	A	A	A	A	A	A

A: ajuster **C: nettoyer** **I: inspecter, ou remplacer si nécessaire** **L: lubrifier**
R: remplacer

1. Les éléments marqués "*" indique nos recommandations pour le faire faire par un revendeur PGO
2. "**P**" annonce qu'il faut vérifier la fonction ou remplacer quand les performances du moteur sont réduites significativement.

REMARQUE 1 :

L'huile du moteur doit être vidangée complètement après une période d'utilisation de 1000 km ou un mois plus tard. Ceci garantit le bon fonctionnement du moteur.

REMARQUE 2 :

Le remplacement du liquide de frein

1. Après désassemblage du cylindre principal de frein ou de l'étrier de frein, mettez le nouveau liquide.
2. Vérifiez souvent le niveau du liquide, remplissez si nécessaire.
3. Changez le joint de l'huile du cylindre principal et de l'étrier de frein tous les deux ans.
4. Changez le tuyau du liquide de frein tous les quatre ans.

REMARQUE 3 : Refroidissement du moteur

1. Nettoyez le filtre du ventilateur de refroidissement tous les 3 000 km.
2. Vérifiez le réglage automatique de signal et les tuyaux du système du radiateur d'abord après 1 000 km, puis tous les 10 000km pour éviter les fuites.
3. Remplacez le liquide de refroidissement du moteur tous les deux ans.

Informations d'entretien:

Elément	Caractéristiques	Descriptions
1	Modèle	**BR-500**
2	Type de moteur	**Moteur mono cylindrique, quatre temps**
3	Alésage	**92 mm**
4	Course	**69 mm**
5	Cylindrée	**460 c.c.**
6	Taux de compression	**10.5 : 1**
7	Distribution	**Simple arbre à came en tête, 4 soupapes**
8	Jeu de soupape	
	Admission	**0.15 mm à froid**
	Echappement	**0.15 mm à froid**
9	Vitesse du ralenti du moteur	**1600 rpm**
10	Filtre à air	**Filtre éponge**
11	Type d'allumage	**Inductif, à haute efficacité, avec bobine d'injection variable avancée et séparée**
12	Bougie	**NGK CR7EKB**
13	Système de démarrage	**Démarreur électrique en roue libre**
14	Générateur	**Courant alternative triphasé.**
15	Batterie	**MF 12V-14Ah**
16	Fusibles	**1A∗1/ 3A∗2/ 10A∗2/ 15A∗3/ 25A∗1**
17	Lubrification	**Par pompe trochoïdale (à l'intérieur du bloc moteur), dérivation ajustement de pression et filtre à huile.**
18	Pression de lubrification	**4 bars**
19	Minimum autorisé (à 100 degrés C)	**0.8 bar**
20	Huile de moteur	**SAE 5W/40 synthétique de qualité supérieure aux spécifications API SJ.**
21	Huile de boîte de vitesse	**TUTELA ZC 90**
22	Alimentation	**Allumage électronique avec pompe à carburant électrique, accélérateur 38 mm et simple injecteur.**
23	Système de refroidissement	**Liquide, par pompe, ventilateur électrique à thermostat tridirectionnel.**
24	Liquide de refroidissement	**Liquide anti-gel à base de monoethylene glycol, CUNA NC 956-16**

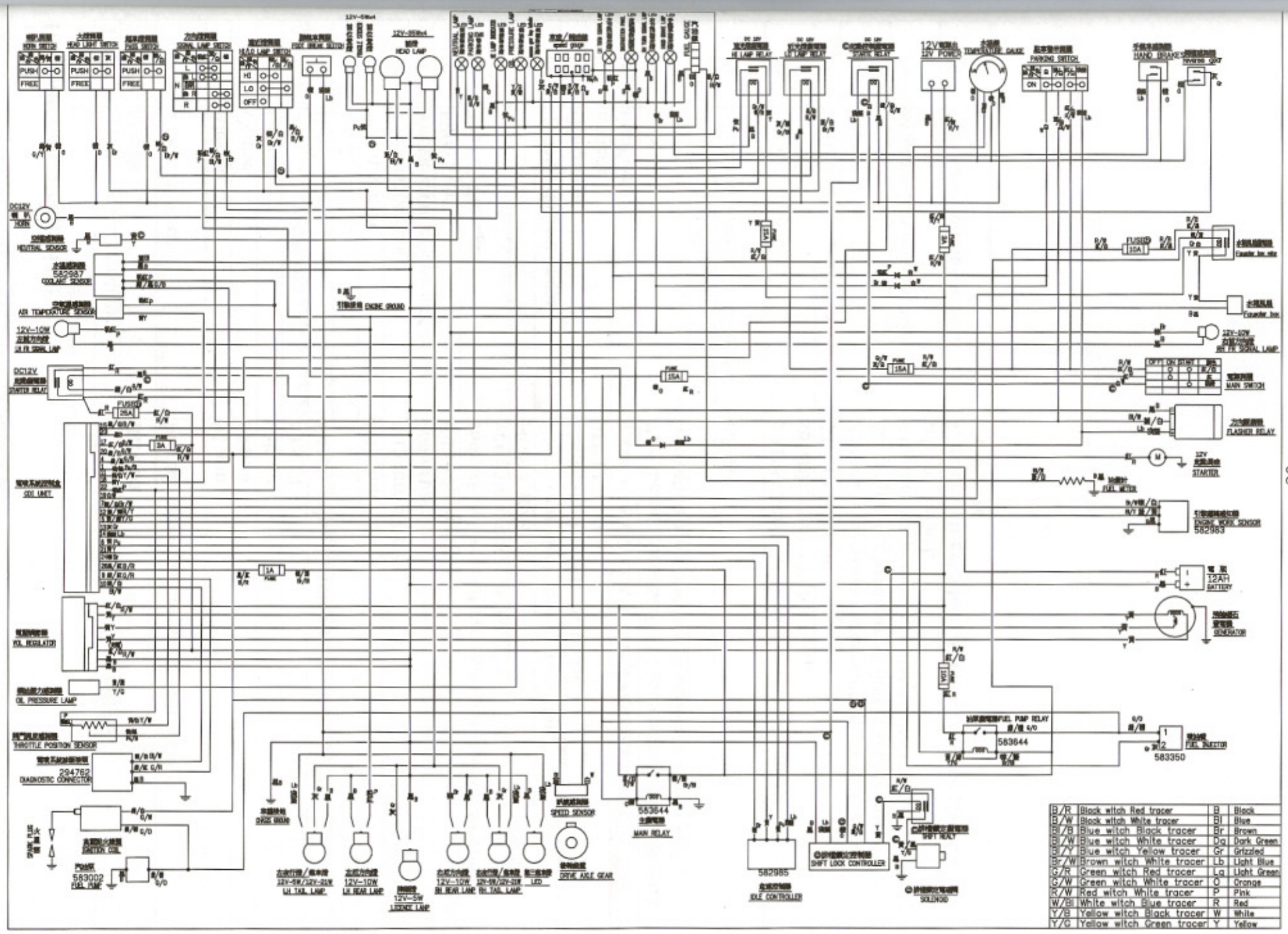
HORN SWITCH
HEAD LIGHT SWITCH
PASS SWITCH
SIGNAL LAMP SWITCH
HEAD LAMP SWITCH
FOOT BRAKE SWITCH
HEAD LAMP
HI LAMP RELAY
LO LAMP RELAY
12V POWER
TEMPERATURE GAUGE
PARKING SWITCH
HAND BRAKE
DC12V HORN
NEUTRAL SENSOR
582987 COOLANT SENSOR
AIR TEMPERATURE SENSOR
12V-10W LH FR SIGNAL LAMP
DC12V STARTER RELAY
ENGINE GROUND
CDI UNIT
FUEL REGULATOR
OIL PRESSURE LAMP
THROTTLE POSITION SENSOR
294782 DIAGNOSTIC CONNECTOR
IGNITION COIL
583002 FUEL PUMP
CHASSIS GROUND
LH TAIL LAMP
LH REAR LAMP
12V-5W LICENCE LAMP
RH REAR LAMP
RH TAIL LAMP
LED
SPEED SENSOR
DRIVE AXLE GEAR
553644 MAIN RELAY
582985 IDLE CONTROLLER
SHIFT LOCK CONTROLLER
SHIFT RELAY
SOLENOID
FUEL PUMP RELAY
583644
583350 FUEL INJECTOR
FUSE 15A
FUSE 10A
FUSE 1A
FUSE 35A
FUSED 10A
Fuzzer box mix
Fuzzer box
12V-10W RH FR SIGNAL LAMP
MAIN SWITCH
FLASHER RELAY
STARTER
FUEL METER
582983 ENGINE WORK SENSOR
12AH BATTERY
GENERATOR
B/R Black witch Red tracer
B/W Black witch White tracer
B/B Blue witch Black tracer
B/W Blue witch White tracer
B/Y Blue witch Yellow tracer
Br/W Brown witch White tracer
G/R Green witch Red tracer
G/W Green witch White tracer
R/W Red witch White tracer
W/B White witch Blue tracer
Y/B Yellow witch Black tracer
Y/G Yellow witch Green tracer
B Black
Bl Blue
Br Brown
Dg Dark Green
Gr Grizzled
Lb Light Blue
Lg Light Green
O Orange
P Pink
R Red
W White
Y Yellow

CHINESE	ENGLISH	FRENCH
喇叭開關	HORN SWITCH	INTERRUPTEUR KLAXON
喇叭	HORN	KLAXON
空檔感測器	NEUTRAL SENSOR	CAPTEUR NEUTRE
水溫感測器	COOLANT SENSOR	CAPTEUR LIQUIDE DE REFROIDISSEMENT
空氣溫感測器	AIR TEMPERATURE SENSOR	CAPTEUR TEMPÉRATURE DE L'AIR
左前方向燈	LH FR SIGNAL LAMP	LAMPE SIGNAL AVANT GAUCHE
起動繼電器	STARTER RELAY	RELAIS DÉMARREUR
電噴系統控制盒	CDI UNIT	UNITÉ CDI
電壓調節器	VOL REGULATOR	RÉGULATEUR DE TENSION
機油壓力感測器	OIL PRESSURE LAMP	LAMPE PRESSION D'HUILE
閥門開度感測器	THROTTE POSITION SENSOR	CAPTEUR POSITION ACCÉLÉRATEUR
電噴系統診斷接頭	DIAGNOSTIC CONNECTOR	CONNECTEUR DIAGNOSTIC
火星塞	SPARK PLUG	BOUGIE
高壓點火線圈	IGNITION COIL	BOBINE D'ALLUMAGE
汽油泵	PUEL PUMP	POMPE CARBURANT
大燈開關	HEAD LIGHT SWITCH	INTERRUPTEUR FEUX AVANT
超車燈開關	PASS SWITCH	INTERRUPTEUR PASSE
方向燈開關	SIGNAL LAMP SWITCH	INTERRUPTEUR LAMPE SIGNAL
遠近燈開關	HI/LO LAMP SWITCH	INTERRUPTEUR LAMPE HI/LO
腳煞車開關	FOOT BREAK SEITCH	INTERRUPTEUR PEDALE DE FREIN
前位置燈	FRAGILE STICKER	AUTOCOLLANT FRAGILE
前燈	HEAD LAMP	FEUX AVANT
數位儀錶	digital meter	Compteur numérique
LED 空檔指示燈	NEUTRAL LAMP	LAMPE NEUTRE
LED EMS 警示燈	PARKING LAMP	LAMPE PARKING
LED 遠燈指示燈	HI LAMP INDICATOR	INDICATEUR LAMPE HI
LED 機油指示燈	PRESSURE LAMP	LAMPE PRESSION
LED 倒檔指示燈	reverse gear lamp indicator	indicateur marche arrière
車速/轉速錶	speed/gauge	vitesse/jauge
LED 左方向指示燈	LH TURN SIGNAL LAMP	CLIGNOTANT GAUCHE
LED 夜間儀表照明	INSTRUCTION PANEL	PANNEAU INSTRUCTION
LED 右方向指示燈	RH TURN SIGNAL LAMP	CLIGNOTANT DROIT
LED 手煞車指示燈	HAND BRAKE LAMP	LAMPE FREIN À MAIN
汽油錶	FUEL GAUGE	JAUGE CARBURANT
遠光燈繼電器	HI LAMP RELAY	RELAIS LAMPE HI
近光燈繼電器	LO LAMP RELAY	RELAIS LAMPE LO
起動控制繼電器	STARTE RELAY	RELAIS DÉMARREUR
12V 電源出	12V POWER	ALIMENTATION 12V
水溫錶	TEMPERATURE GAUGE	JAUGE TEMPÉRATURE
駐車警示開關	PARKING SWITCH	INTERRUPTEUR PARKING
手煞車感測器	HAND BRAKES	FREIN À MAIN
倒檔感測器	reverse gear	marche arrière
引擎接地	ENGINE GROUND	MASSE MOTEUR
	FUSE	FUSIBLE
車體接地	CHASIS GROUND	MASSE CHÂSSIS
左夜行燈/煞車燈	LH TAIL LAMP	FEU ARRIÈRE GAUCHE
左后方向燈	LH REAR LAMP	FEU ARRIÈRE GAUCHE
牌照燈	LICENCE LAMP	LAMPE LICENSE
右後方向燈	RH REAR LAMP	FEU ARRIÈRE DROIT
右夜行燈/煞車燈	RH TAIL LAMP	FEU ARRIÈRE DROIT

第三煞車燈	LED	LED
訊號感測器	SPEED SENSOR	CAPTEUR VITESSE
後軸齒盤	DRIVE AXLE GEAR	ESSIEU MOTEUR
主繼電器	MAIN RELAY	RELAIS PRINCIPAL
怠速控制器	IDLE CONTROLLER	CONTROLEUR RALENTI
排檔鎖定控制器	SHIFT LOCK CONTROLLER	CONTROLEUR VERROU TRANSMISSION
排檔鎖定繼電器	SHIFT REALY	RELAIS
排檔鎖定電磁閥	SOLENOID	SOLENOIDE
油泵繼電器	FUEL PUMP RELAY	RELAIS POMPE CARBURANT
水箱風扇繼電器	Fanwater box relay	Relais boîte ventilateur de radiateur
水箱風扇	Fanwater box	Boîte ventilateur de radiateur
右前方向燈	RH FR SIGNAL LAMP	LAMPE SIGNAL AVANT DROIT
電源開關	MAIN SWITCH	INTERRUPTEUR PRINCIPAL
方向斷續器	FLASHER RELAY	RELAIS CLIGNOTANT
起動馬達	STARTER	DÉMARREUR
油量計	FUEL METER	COMPTEUR CARBURANT
引擎運轉感知器	ENGINE WORK SENSOR	CAPTEUR TRAVAIL MOTEUR
電瓶	BATTERY	BATTERIE
飛輪磁石發電機	GENERATOR	GÉNÉRATEUR
噴油嘴	FUEL INJECTOR	INJECTEUR CARBURANT

B/R	Black witch Red tracer	Traceur noir et rouge
B/W	Black witch White tracer	Traceur noir et blanc
Bl/B	Blue witch Black tracer	Traceur bleu et noir
Bl/W	Blue witch White tracer	Traceur bleu et blanc
Bl/Y	Blue witch Yellow tracer	Traceur bleu et jaune
Br/W	Brown witch White tracer	Traceur marron et blanc
G/R	Green witch Red trace	Traceur vert et rouge
G/W	Green witch White tracer	Traceur vert et blanc
R/W	Red witch White tracer	Traceur rouge et blanc
W/Bl	White witch Blue tracer	Traceur blanc et bleu
Y/B	Yellow witch Black tracer	Traceur jaune et noir
Y/G	Yellow witch Green tracer	Traceur jaune et vert
B	Black	Noir
Bl	Blue	Bleu
Br	Brown	Marron
Dg	Dark Dreen	Vert foncé
Gr	Grizzled	Grisonnant
Lb	Light Blue	Bleu clair
Lg	Light Green	Vert clair
O	Orange	Orange
P	Pink	Rose
R	Red	Rouge
W	White	Blanc
Y	Yellow	Jaune

BR-500 Pre-Delivery Inspection Assembly Operation Drawing

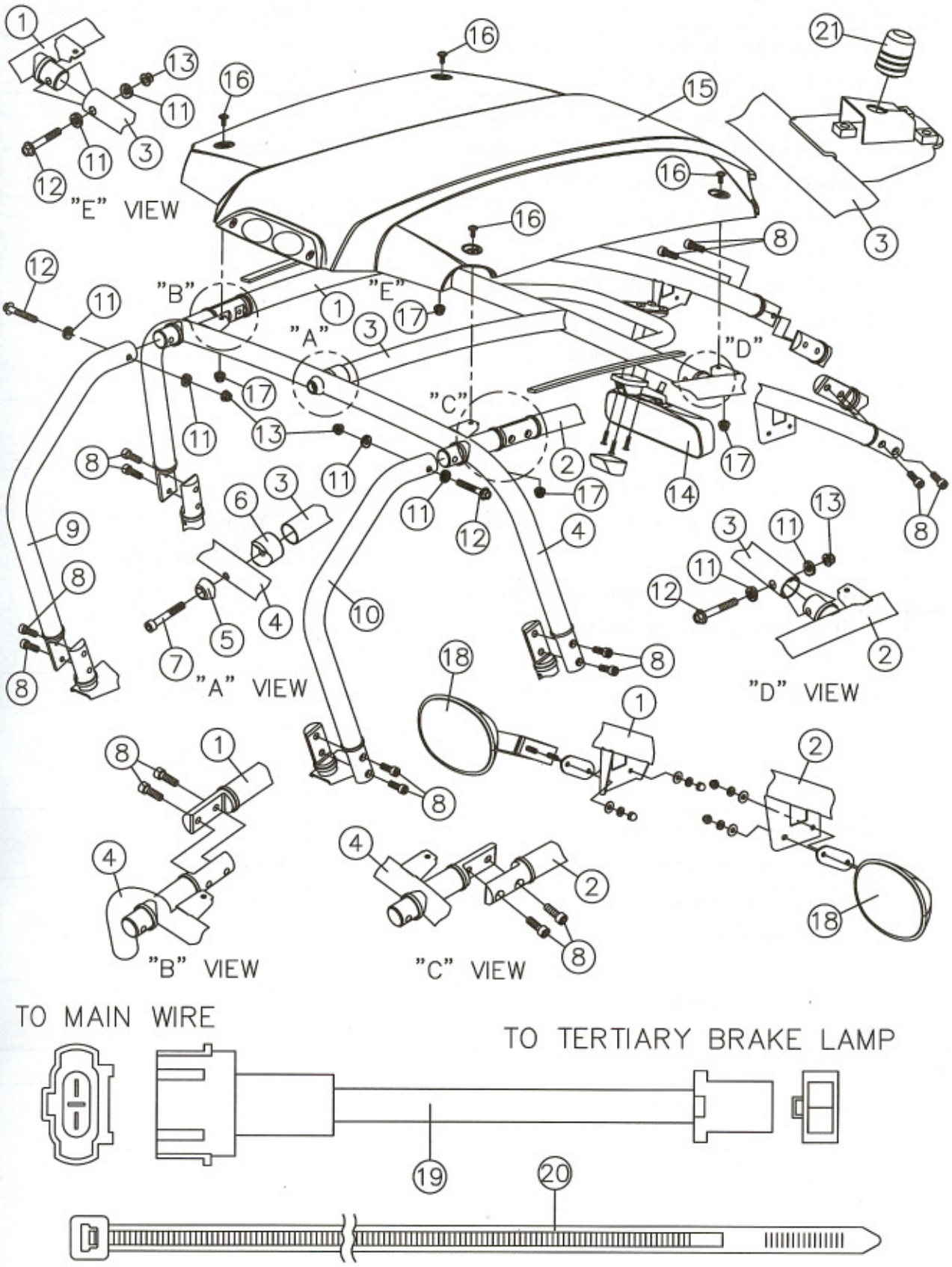

1/3

BR-500 Inspection avant expédition
Procédure de montage

No.	Instruction de procedure d'opération	Dispositif	Code et Spéc.	Remarque
1	Mettez pièce 4 dans le châssis fixé et verrouillez la par pièce 8 en les lassant desserrer		3/8" 3/8"X8mm	
2	1. Mettez pièce 1+2 aux deux côtés de châssis 2. Ensuite, verouillez pièce 1+2 par pièce 8 dans le châssis fixé en les lassant desserrer		3/8" 3/8"X8mm	
3	1. Mettez les deux côtés de pièce 3 dans pièce 1+2 fixée 2. Verouillez par pièces 11+12+13 en les lassant desserrer 3. Ensuite, insérez pièce 6 dans pièce 3 4. Visser pièces 5+7 dans pièce 4		3/8" 3/8"X14mm 12mmX14mm	
4			3/8" 3/8"X8mm	
5	1. Mettez pièces 9+10 dans pièce 4 fixée 2. Ensuite, verrouillez pièces 11+12+13 en les lassant desserrer 3. Finalement, mettez le bout inférieur de pièces 9+10 vissée par pièce 8 en les laissant desserrer		3/8" 3/8"X14mm 12mmX14mm 3/8"X8mm	
6	Verrouillez pièces 7+8+12+13 fermement		3/8" 3/8"X14mm 12mmX14mm 3/8"X8mm	
7	1. Mettez pièce 15 dans le châssis fixé 2. Bien serrez la avec par pièces 16+17		1/4" 1/4"X#2	
8	1. Mettez pièce 14 dans le châssis fixé et serrez la par les vis attachées 2.		10mmX12mm	
9	1. Mettez pièce 18 dans le châssis fixé 2.			
10				

BR-500 Inspection avant expédition
Liste de pièces

Ref. No.	Pièce No.	Designation	REDG. No.	Remark
1	B84210907700	TUBE PROTECTION LAT. GAUCHE.		
2	B842A1907700	TUBE PROTECTION LAT. DROIT.		
3	B84211007700	ARCEAU TOIT HORIZONTAL AVANT.		
4	B84211707700			
5	B84211600000	RONDELLE DE TUBE A		
6	B84211500000	BAGUE DE TUBE		
7	90211007000	BOULON HEXAG M10*70		
8	90211003000	BOULON HEXAGONAL M10*30		
9	B84211107700	TUBE PROTECTION LAT. GAUCHE.		
10	B842A6007700	TUBE PROTECTION LAT. DROIT.		
11	B84211800000	RONDELLE DE TUBE B		
12	90191006001	BOULON HEXAGONAL M10*60		
13	92061000004	ECROU HEXAGONAL		
14	B86170000000	RETROVISEUR CENTRAL		
15		FEU DE STOP CENTRAL & TOIT		
16	90200601800	BOULON AVEC RONDELLE		
17	92040600000	ECROU HEXAGONAL (M6*1.0P)		
18	B86160000000	KIT RETROVISEUR DROIT ET GAUCHE		
19	B85816200000			
20	B87011400000			

PGO

BUILD 4 FUN

MOTIVE POWER INDUSTRY CO.,LTD.

B83520400000 法文版

Usine: NO.66,SHANJIAORO.,DACUNTOWNSHIP,CHANGHUACOUNTY,TAIWAN,R.O.C
T E L:886-4-852-8111 F A X : 886-4-852-8112 E-MAIL : pgo.ms12.hinet.net

PGO SCOOTERS

BR-500

SERVICE MANUAL

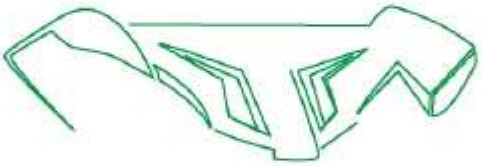

http:www.english.pgo.com.tw

PREFACE

This manual offers all service specialists with the technological procedures of operation, maintenance, repairing for **BugRacer (BR-500)** show those whom may concern how to maintain in detail, repair, change parts, troubleshoot and reassemble, etc.

At every important section we illustrate by assembly, explosion diagrams and photographs, if necessary, please check the diagrams already shown..

Though we have tried our best, please kindly instruct us any faults found in this manual.

MOTIVE POWER INDUSTRY CO., LTD.

INDEX OF TOPICS

CHARACTERISTICS	1
OPERATION	2
MAINTENANCE	3
COOLING SYSTEM	4
ELECTRIC SYSTEM	5
VEHICLE ENGINE	6
STEERING WHEEL AND SUSPENSIONS	7
BRAKING SYSTEM	8
INJECTION	9
ENGINE	10
PRIOR TO DELIVERY	11
TIME CHART	12

INDEX OF TOPICS

CHARACTERISTICS	1

1.1 BUGRACER SPECIFICATION

Name	BugRacer	FRAME	STEEL
TYPE	BR-500	SUSPENSION SYSTEM	
DIMENSION		FRONT	DUAL A ARM
TOTAL LENGTH	2920 mm	REAR	SWING ARM
TOTAL WIDTH	1620 mm	TRANSMISSION	
TOTAL HEIGHT	1480 mm	RPIMARY RATIO	1
WHEELBASE	2250 mm	SECONDARY RATIO	50/20*47/14
DRY WEIGHT	263KG	CLUTCH	C.V.T.
FRONT	190 KG	H	1.594
REAR	280 KG	L	2.439
TOTAL	470 KG	REVERSE	2.593
LOAD	2 PERSONS(110KG)	TIRE	
VEHICLT PERFORMANCE		FRONT	25×8-12
TOP SPEED	80 KM/H	REAR	27×10-12
FUEL CONSUMPTION	20 km/l	BRAKE SYSTEM	
CLIMBING ABILITY	25 °	FRONT	DISC BRAKE
ENGINE TYPE	M343M	REAR	DISC BRAKE
CYCLE	4	LIGHT	
FUEL	UNLEADED #95	HEAD LIGHT(H/L)	12V-35W/35W*2
CYLINDER NUMBER	1	TAIL LIGHT	12V-5W
ARRANGEMENT	HORIZONTAL	BRAKING LIGHT	12V-21W
DISPLACEMENT	460 cc	TURN LIGHT	12V-10W*2 12V-21W*2
BORE	φ92 mm		
STROKE	69 mm		
COMPRESSION RATIO	10.5：1		
MAX. POWER/RPM	14.8kw/7250rpm		
AMX. TORQUE/RPM	24.0N-M/6000rpm		
IDLE RPM	1600±100 RPM		
IGNITION	TRANSISTOR		
SPARK PLUG	NGK CR7EKB		
COOLING	LIQUID		
STARTER	ELECTRIC		
FUEL SUPPLY	ELECTRIC PUMP		
LUBRICATION	SEPARATED		

1.2 The operation & safety notice:

1. Always replace gasket, O ring, cotter, pins and clip whenever reassembled.
2. When tighten screws or nuts, lock tightly as per specified locking torque, and in the sequence of cross direction.
3. Use PGO, or PGO Recommended parts.
4. After dismantling please wash all parts necessary for checking and grease all contact surface when reassembling.
5. Use grease recommended by PGO.
6. When removing battery, please dismantle the negative pole (-) first, when assembling please connect positive pole (+) first.
7. Before installing a new fuse, confirm the specification is correct or not. Do not use a higher ampere than the original specification.
8. After reassembling, please re-check that all connecting point, locking parts, circuits, polar characteristics are good, before selling out.
9. Fuel is highly flammable, and in some conditions it can be explosive. Do not smoke in the working area, and avoid free flames or sparks.
10. Should it necessary to keep the engine running while servicing, make sure that the area or room is well ventilated, and use special exhaust fans, if required. Never let the engine running in close room. In fact, exhaust gases are toxic.

1.3 TORQUE VALUE

1. Engine:

NO	Locking location	Q' TY	Locking torque (N-m)	Remark
1	Ignition spark plug	1	12~14	
2	Head fixing pins	4	Apply a preliminary torque of 7N-m in a	Tighten by 90^0 in a cross
3	Head fixing nuts	2	10~12	
4	Exhaust/Intake head fastening nuts	2	10~12	
5	Head lubrication control jet	1	5~7	
6	Starter motor fastening screws	2	11~13	
7	Cooling fluid temperature sensor	1	10~12	
8	Balance weight mass fastening screw	1	7~8.5	
9	Tighten sliding block fastening screw	1	10~14	
10	Phase evolution sensor fastening screw	1	3~4	
11	Injector fastening screw	1	3~4	
12	Valve lifting device mass stop bell fastening screw	1	30~35	
13	Intake manifold fastening screws	3	11~13	
14	Tappet cover fastening screws	6	7~9	
15	Throttle body fastening screws	3	11~13	
16	Camshaft retaining bracket fastening screws	3	4~6	
17	Tightener fastening screws	2	11~13	
18	Head fastening screws	3	10~12	
FLYWHEEL COVER				
19	Flywheel fastening nut	1	115~125	
20	Stator fastening screws	3	8~10	
21	Blow-by recovery duct fastening screws	2	3~4	
22	Screws for fixing the free wheel on the flywheel	6	13~15	
23	Stator wiring guide bracket screws	2	3~4	

NO	Locking location	Q' TY	Locking torque (N-m)	Remark
CRANKCASE AND DRIVING SHAFT				
24	Counter shaft fastening screw	1	25~29	
25	Engine oil filter	1	12~16	
26	Engine oil drainage cap	1	24~30	
27	Crankcase coupling screws	14	11~13	
28	Oil pump fastening screws	2	5~6	
29	Gear screws on driving shaft	4	10~12	
30	Oil pump compartment closing head screws	2	8~10	
FINAL REDUCTION				
31	Hub cover screws		24~27	
TRANSMISSION COVER				
32	Driven pulley nut	1	92~100	
33	Driving pulley nut	1	160~175	
34	Transmission cover M8 fastening screws	4	23~26	
35	M6 fastening screws	7	11~13	
36	Anti-flapping roller fastening screw	1	17~19	
37	Clutch ring nut	1	65~75	
38	Internal air conveyor screws	2	7~9	
39	Water pump cover screws	6	3~4	
40	Outside transmission cover screws	4	7~9	
41	Flywheel cover screws	14	11~13	
LUBRICATION				
42	Oil pump coupling screws	2	0.7~0.9	
43	Oil pump fastening screws	2	5~6	

Major Service Engine parts:

Engine oil drain bolt	2nd Oil filter
Hub gear oil drain bolt	Engine coolant water drain bolt
Bolts for cylinder head cover	Reverse gear oil drain bolt

2.Locking Torque Standard (Chassis)

No	Locking location	Qty	Thread dia (mm)	Kg-m	Remark
1	Wheel nut	16	10	3.5~4.0	
2	Wheel axle nut	4	18	10.0~11.0	
3	Upper absorber bolt	4	12	4.0~5.0	
4	Lower absorber bolt	4	12	4.0~5.0	
5	Upper suspension A arm bolt	4	12	4.0~4.5	
6	Lower suspension A arm bolt	4	12	4.0~4.5	
7	Steering universal joint bolt	1	8	2.0~3.0	
8	Seat belt fixture	5	8	3.0	
9	Tie rod nuts	4	10	3.5~4.0	
10	Roll cage bar	6	8	4.0	
11	Rear swing arms with frame	2	16	10.0~11.0	
12	Rear swing arms with rear hub	8	10	3.5~4.0	
13	Engine hanger with frame	2	8	2.0~3.0	
14	Engine hanger with engine	1	12	4.0~5.0	
15	Connecting rod nuts	2	10	3.5~4.0	
16	Brake caliper fixture	8	8	2.0~3.0	
17	Park Brake fixture	4	8	2.0~3.0	
18	Brake hose bolt	6	8	2.0~3.0	
19	Braking sensor	1	8	2.5~3.0	
20	Neutral sensor	1	8	3.5~4.0	
21	Reverse gear socket nut	1		10.0~11.0	
22	Muffler fixing bolts & nuts	4	10	3.5~4.0	
23	Brake disk bolts	16	8	2.0~3.0	

Chassis parts:

nut for tie-rod V.S. A-arm	adjusting nut for tie rod
Nuts for wheel rim	Bolt for balance bracket
Bolts for A-arm	Bolts for cushion(lower & upper)

Chassis parts:

Nuts for rear swing arm V.S. brake hub	Bolt for rear swing arm
Nut for engine hanger V.S. engine	Bolts for Reverse gear V.S. bracket
	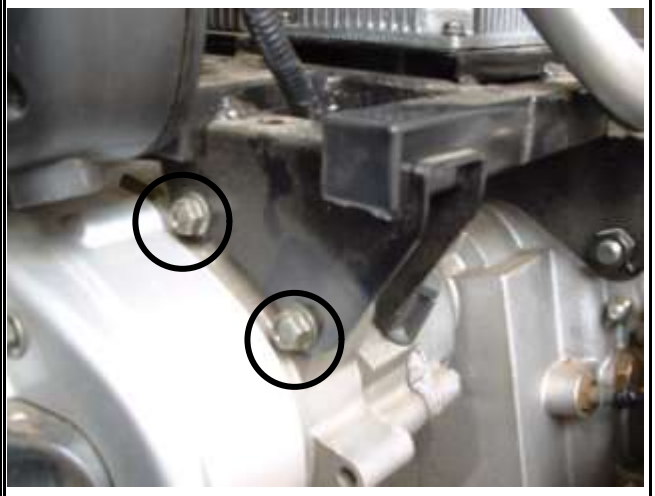
Bolts for fixing muffler	Bolts for engine V.S. engine upper bracket

USE	FEATURES	PRODUCTS
Rear hub oil	Oil SAE 80W/90 of higher quality than API GL3 specifications	TUTELA ZC 90
Air filter sponge oil	Mineral oil with specific additives to increase adhesion ISO VG 150	SELENIA Air Filter Oil
Grease (brake command levers, gas)	Complex calcium soap grease NLGI 1-2	SYSTEM TW 249 AREXONS
Engine oil	Synthetic oil SAE 5W/40 of higher quality than API SJ specifications	SELENIA HI Scooter 4 Tech
Brake fluid	Synthetic fluid SAE J1703, NHTSA 116 DOT 4, ISO 4925	TUTELA TOP 4
Coolant	Anti-freezing fluid based on monoethylene glycol, CUNA NC 956-16	PARAFLU FE
Grease for driven pulley shaft compensating ring and mobile driven pulley sliding seat	Molybdenum bisulphide grease	MONTBLANC MOLYBDENUM GREASE (Dwg. 498345)
Grease for steering wheel bearings, pin seats and oscillating arm	Lithium soap and zinc oxide grease NLG12 for the oscillating arm	TUTELA ZETA 2
Reverse gear box oil	Oil SAE 80W/90 of higher quality than API GL3 specifications	TUTELA ZC 90

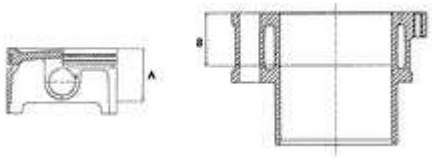

(Values in mm)

HEIGHT AT WHICH THE DIAMETER SHOULD BE MEASURED	A: 43,2 mm B: 43 mm

(Values in mm)

Name	Dimensions
Cylinder diameter C	$92^{+0,018}_{-0,01}$
Piston diameter P	$91,961^{-0,029}_{-0,057}$

Coupling categories			Clearance upon assembly
Abbrev.	Cylinder	Piston	
A	91,990 ~91,997	91,947 ~91,954	0,036 ~0,050
B	91,997 ~92,004	91,954 ~91,961	
C	92,004 ~92,011	91,961 ~91,968	
D	92,011 ~92,018	91,968 ~91,975	

The piston must be installed with the arrowtowards the exhaust side; elastic strips must be fitted with the sign facingupwards.

* Fit linings 2 and 3 with "TOP" upwards.

** Arrange the strip opening as shown.

*** Value "A" of the sealing ring into the cylinder

**** Ring opening

NAME	DIMENSION	CLEARANCE NAME	CLEARANCE WHEN SEATED	MAX CLEARANCE AFTER USE
First compression lining	92 x 1,5	A	0,15 ~0,35	0,5
Second lining	92 x 1,25	A	0,25 ~0,50	0,65
Scraper ring lining	92 x 2,5	A	0,25 ~0,50	0,65

N.B.: The measure **"A"**to take is a piston projection or recess value and indicates the type of gasketto be fitted at the cylinder base to recover the compression ratio. The morethe plane formed by the piston top protrudes from the plane formed by thecylinder top, the thicker the base gasket. On the other hand, the more thepiston top is recessed into the cylinder top plane, the smaller the gasketthickness.

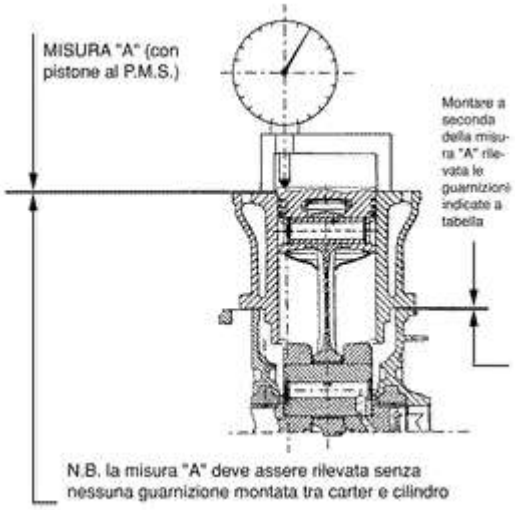

MEASURE TAKEN "A"	BASE GASKET THICKNESS
- 0,185 -- 0,10	0,4 +- 0,05
- 0,10 -+ 0,10	0,6 +- 0,05
+ 0,10 -+ 0,185	0,8 +- 0,05

The values indicated with ??refer to recesses

.Driving shaft / crankcase axial clearance: 0.1 ~ 0.5 mm (when cold)	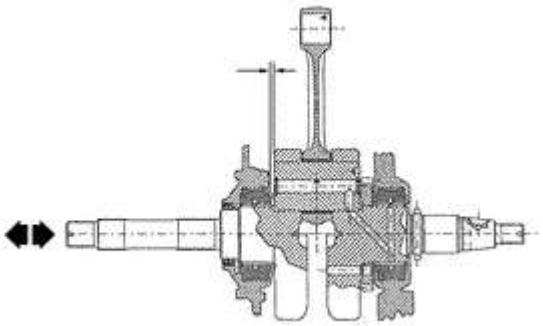

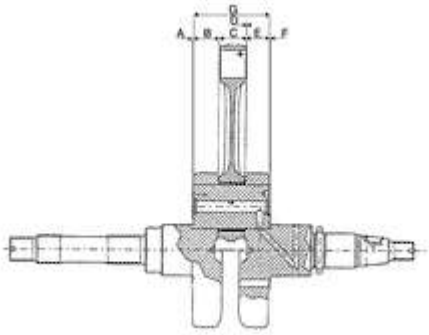

NAME	DIMENSIONS	ASSEMBLY CLEARANCE
Transmission-side shoulder	A =0,8 $^{+-\ 0,025}$	D = 0,20 ~ 0,40
Transmission-side half-shaft	B =19,6 $^{+\ 0,05}_{0}$	
Connecting rod	C =22 $^{-\ 0,10}_{-0,15}$	
Flywheel-side half-shaft	E =19,6$^{+\ 0,05}_{0}$	
Flywheel-side shoulder	F =13 $^{+-\ 0,025}$	
Complete driving shaft	G =63,5 $^{+\ 0,1}_{-0,05}$	

- Measure the capacity on both axes x-y.

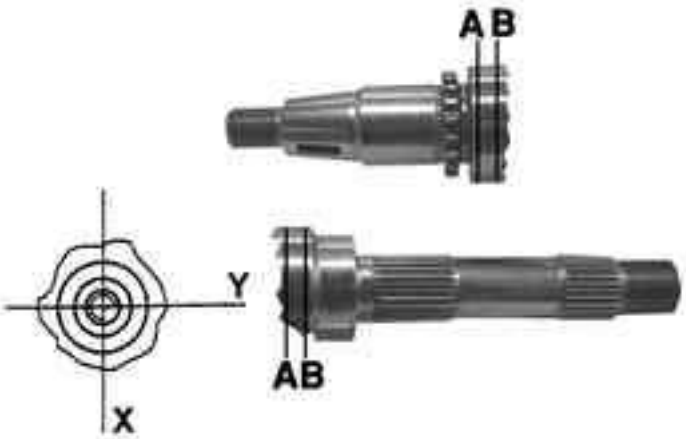

Driving shaft	Standard diameter
Cat. 1	40,010 ~ 40,016
Cat. 2	40,016 ~ 40,022

Drivingshaft alignment

Max admissible displacement:
A = 0,15 mm
B = 0,010 mm
C = 0,010 mm
D = 0,10 mm

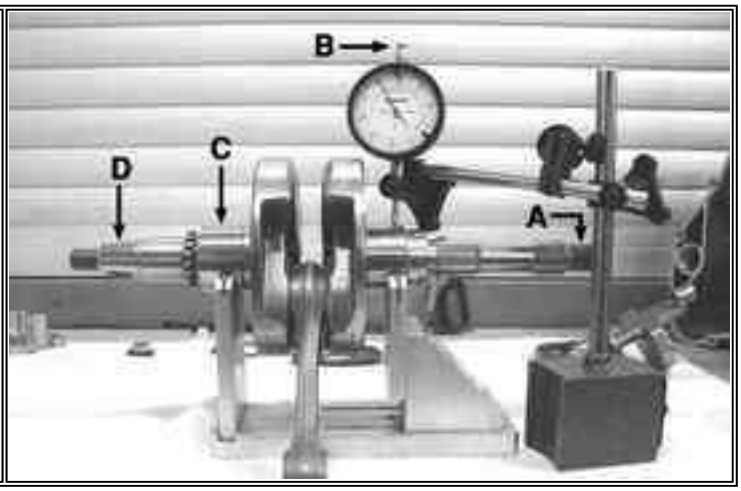

Specificequipment and tools:

Driving shaft support.: 020074Y
Comparator: 020335Y

INDEX OF TOPICS

OPERATION	**2**

A. Operation controls

WARNING-Do not attempt to start or operate the engine until completely familiar with the Location and use of each control necessary to operate this vehicle. The operator must know how To stop this machine before starting and driving it.

a. Throttle

The right foot pedal is the throttle that controls the buggy speed. As the engine speed Increased above idle, the clutch automatically engages and moves the vehicle forward. To disengage the clutch at any time, allow the throttle to return to the idle position.
(See Figure)

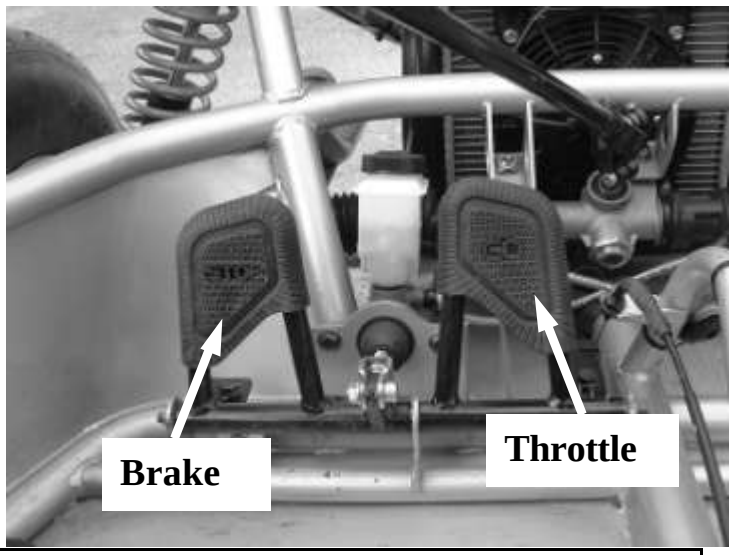

Each time prior to starting the engine, check the throttle assembly to ensure that when the pedal is pushed all the way forward the assembly is working smoothly and returns to idle. If unable to correct the problem through lubrication, linkage fail to return to idle. If unable to correct the problem through lubrication, adjustment or replacement of worn parts, contact your dealer for assistance.

b. Brake

The brake is located on the left side of the buggy (See Fig.1). Applying pressure to the Pedal draws the brake caliper around the brake pump at the rear wheel and slows or stops The buggy.

c. Start engine

1. Insert the key into key-switch, push the braking pedal and turn the key clockwise, release the key when the engine starts.
2. The engine will warm up within 5 minutes and the engine choke will close automatically.
3. Don't crank starter more than 5 seconds at one time).

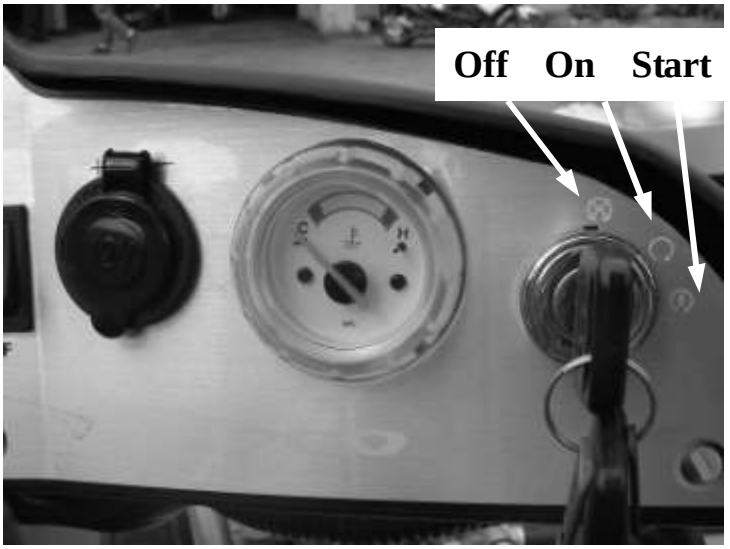

4. **warm-up**:
   - to sustain the engine performance well, please warm-up the engine at first 5 minutes when cold start, and do not operate in fully throttle during warm-up period.
   - During the warm-up period, the engine might exhaust color smoke. But once after the warm-up period, the color smoke will disappear!

d. Parking button

Important-Parking button test.

Before driving this vehicle, test the Parking Button to assure that it is operating properly. With the key on, push and hold the Parking Button for two seconds for the signal lamps to twinkle.

- For your safety, please usually choose a flat area to park the vehicle.
- Before leave the vehicle, besides shifting the gear to "P" position, remember to pull the Parking lever up.

e. Control panel of BR-500

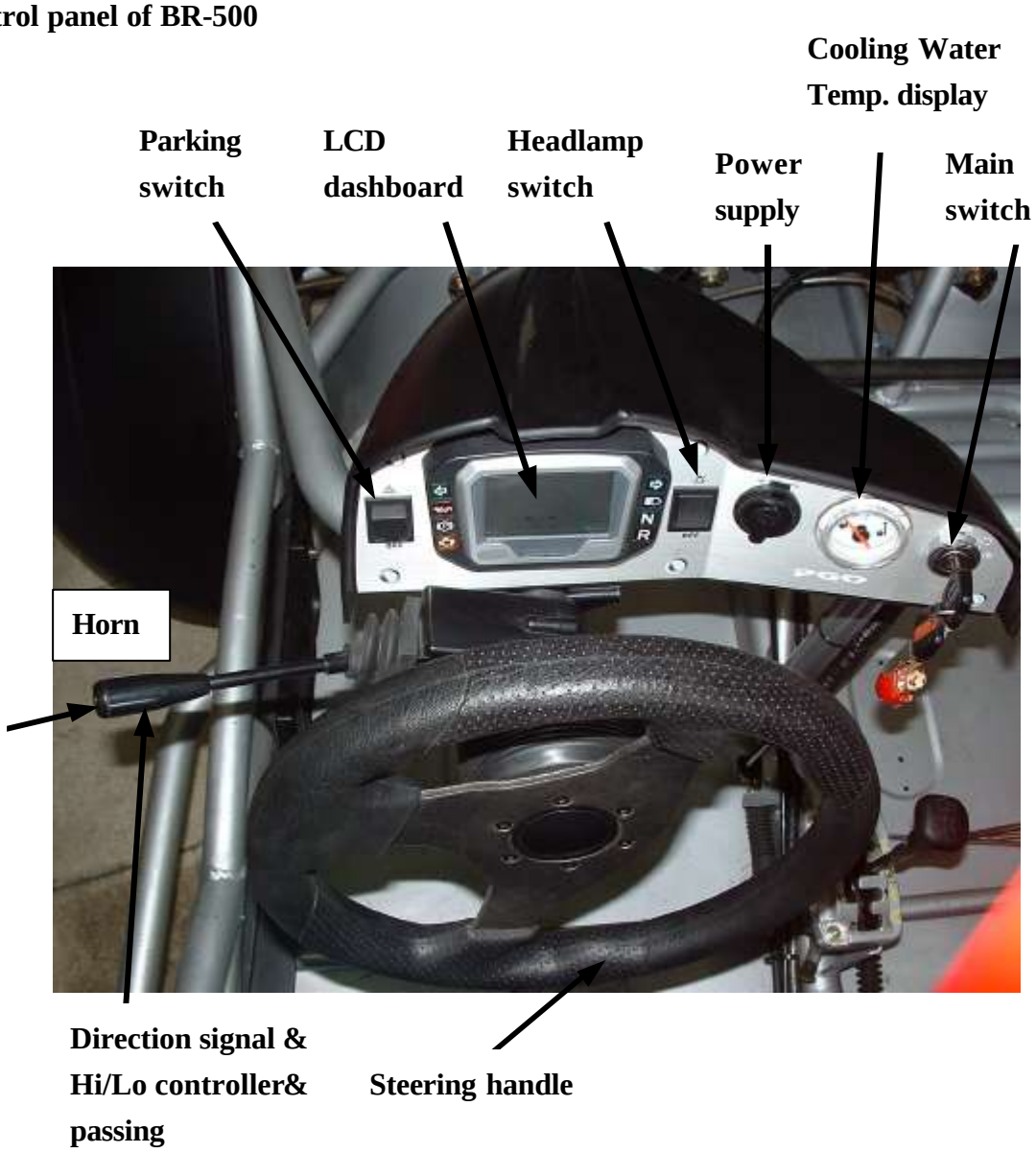

f. Fuel cap

The fuel cap is located at the rear-right side of the buggy, insert the main key, turn it clockwise to open the cap, fill with unleaded fuel only.

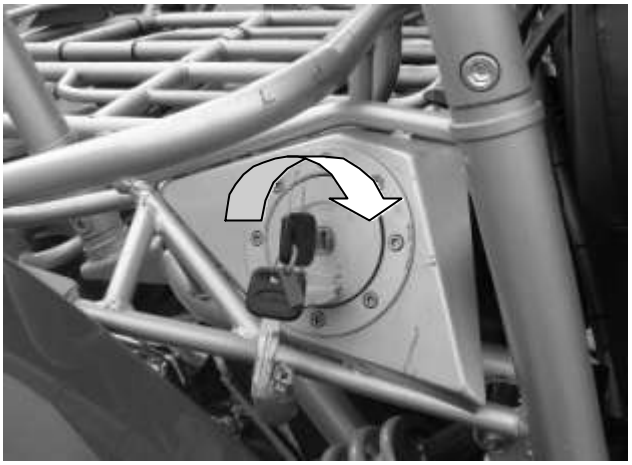

g. Digital LCD Speedometer

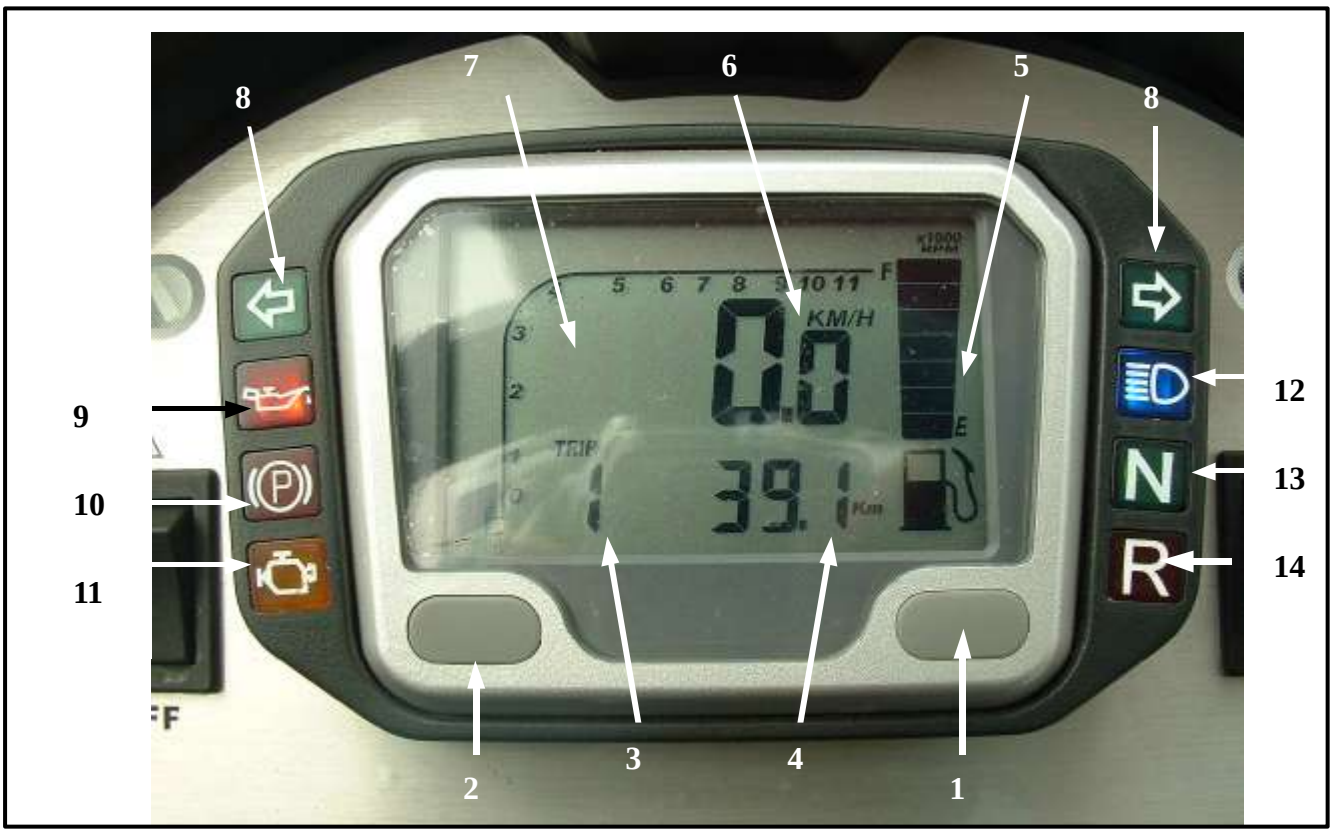

1.Symbol description

1 11 MODE button
2 (2) RESET button
3 (3) TRIP display : kilometer or mile
4 (4) ODOMETER display : kilometer or mile
5 (5) Fuel amount display
6 (6) Speed display : km/h or mile
7 (7) Engine speed display area : (* 1,000 round/min)
8 (8) Signal indicator lamp
9 (9) Oil warning indicator lamp: when the oil pressure is too low, this lamp warns you to inspect the engine oil level.
10 (10) Parking indicator lamp
11 (11) EMS check indicator lamp: when this lamp is ON during driving, you have to inspect the EMS as soon as possible.
(Excludes the initial self-test after the main key is ON !)
12 (12) High beam indicator lamp
13 (13) Neutral gear indicator lamp: only at this position that you can start the engine.
14 (14).You can't shift the gear until this bulb lights ON. That means you have to push the brake pedal and keep the engine speed below 3,000 rpm first!

2. Setting:

Press "**MODE + RESET**" 2 sec., then can get into the setting procedure.

①**Button operation**

Situation Button	Setting	Main menu
B. MODE	: to next parameter 2: escape	: switch display
RESET	: digital + 1 2: no function	: no function 2: Reset RT, MAX, TRIP
MODE + RESET	no function	2: setting parameter

- 『 』 means press button one time.
- 『 2』 means press button and hold 2 seconds..
- If without pressing any button during 75 sec., it will escape to main menu automatically.

②**Unit**: km/h or mile/h, switched by **RESET**, and **MODE**(2 sec) to confirm

③**Wheel circumstance (C)** : from 1 to 3999 mm, 4 digitals individually set by **RESET** to increase one by one, and **MODE**(2 sec) to next digital. Finally press **MODE** 2 sec. to escape setting; **the default value is 2155** for BR-500.

④**12/24**: day time showing, if you select "12", then it will show AM or PM.

⑤**rpm**: Engine high speed warning limit

accelerating the engine to shifting-warning-speed, and press **RESET** to input this parameter; hereafter when the engine reaches this speed, the display rpm will twinkling to warn you reducing the engine speed.

⑥**SPC**: Engine ignition parameter (0.5/1.0/1.5/2.0), **the default value is 2.0**.

3. Display description: switched by MODE in main menu.

- SPD: real time speed, KM/H or MPH switched by RESET button.
- TRIP: trip distance from last RESET, press RESET to zero again.
- MAX: maximum speed after last RESET, press RESET to zero again.
- RT: operating time from last RESET, press RESET to zero again.
- AVG: average speed from last RESET, press RESET to zero again.
- MAX RPM: maximum engine speed after last RESET, press RESET to zero again.
- ODO: accumulated distance from this speedometer been used, it can not be RESET.
- TT: operating time from this speedometer been used, it can not be RESET.

h. Cooling water warning

When the indicator reaches **RED** area, that warns you the temperature of cooling water is too high, you have to stop the engine and cold down the temperature immediately.

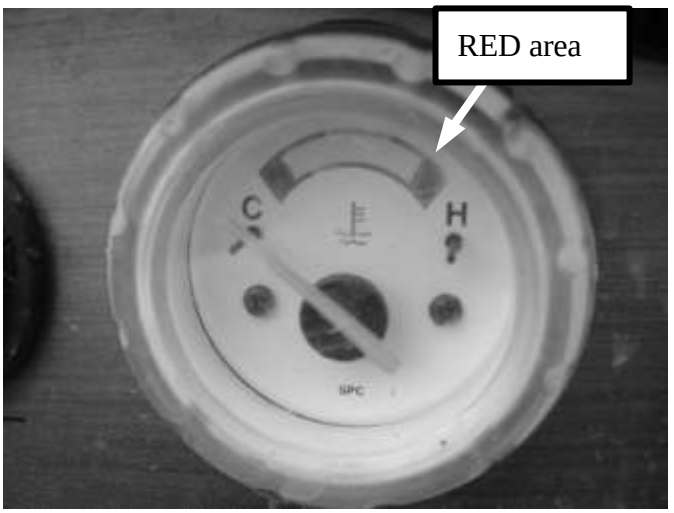

B. Pre-Drive Inspection

Perform this pre-drive inspection everyday before driving vehicle. If not Performed, serious damage to the vehicle or personal injury may result.
Always follow rules for safe operation and wear a helmet.

a. Check for Engine Oil Level. Check for leaks, add oil if required.
b. Check for Fuel Level. Add fuel as necessary and do not overfill. Check for leak.
c. Check for engine coolant, Add coolant as necessary and check for leaks.
d. Check for Brakes. Depress the rear brake pedal several time, then check for proper brake pedal free-play. Make sure there is no brake fluid leakage. Adjust if necessary.
e. Check Tires. Check tires condition and pressure.
f. Check Throttle. Check for smooth operation. Assure throttle “snaps” back to idle.
g. Check Parking Button. Perform button test. Repair as necessary.
h. Check all Nuts, Bolts, and fasteners. Check wheels to see that all axle nuts and lug nuts are tightened properly. Check and tighten as necessary all other fasteners to specified condition.
i. Check Roll Cage Bar. Ensure all protective roll cage bars are in place before operating the Kart.
j. Check Brake Light. Check for proper operation.
k. Check Wheels. Check for tightness of wheel nuts and axle nuts; check that axle nuts are secured by cotter pins.
l. Check Steering. Check for free operation for any unusual looseness in any area.

C. Component Location

1. Vehicle Identification Number (VIN) is located (stamped)at the right side of frame.

   NOTE:

   The first 9 digitals are type, the last 8 digitals are production serial numbers.

   Your dealer need this number for ordering the parts, Please write down the engine no. for their reference.

2. Engine No. is located (stamped)on the rear side of the left crankcase.

   NOTE:

   The upper row is model type, the lower row is production serial numbers.

   Your dealer need this number for ordering the parts, please write down the engine no. for their reference.

3. Basic Component locations

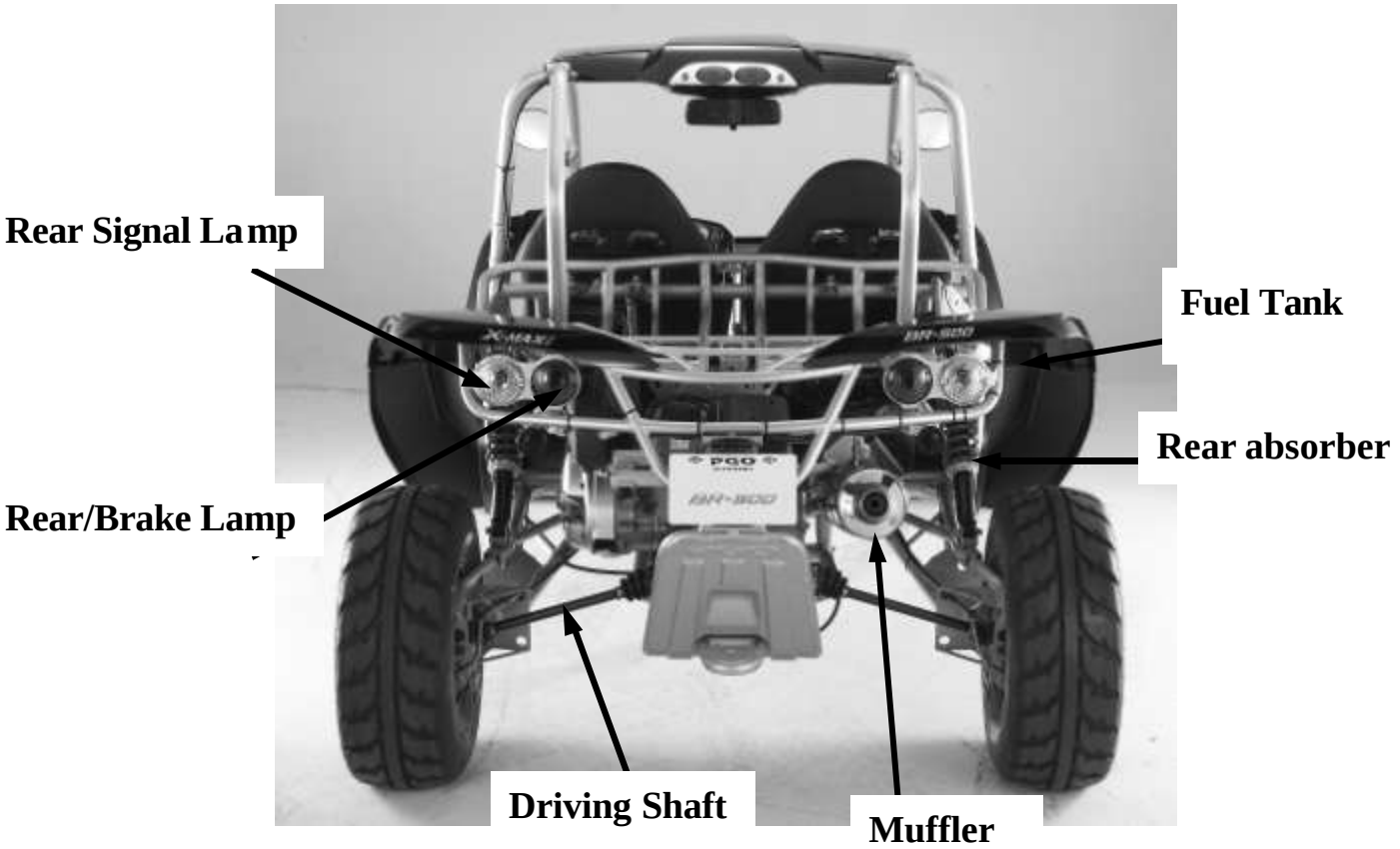

D. Passengers

The vehicle allows for two riders only. Be sure that the driver and passenger are seated properly in the buggy with the **seatbelts**. Otherwise it will be very dangerous for you!

E. Seat Adjustment

The seat must always be securely fastened on the position which best affords the operator control of the foot pedals, steering wheel, and the emergency stop ignition key.

a. Pull seat adjustment handle upward to disengage seat slide.
b. Move seat to desired position.
c. Be sure seat adjustment handle snaps back into place and that seat is locked into position.

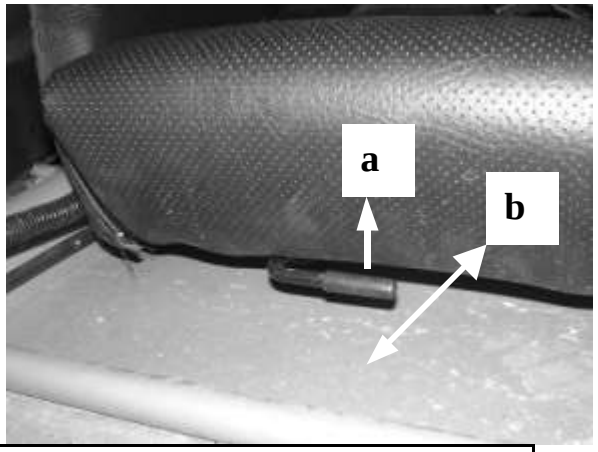

Before attempting to adjust the seat ensure that engine of the buggy is stopped.

Never operate this buggy when the provided seat is not securely fastened, to do so could result in strong Possibility of severe personal injury or loss of life.
Before attempting to adjust the seat ensure that engine of buggy is stopped.

F. Driving control

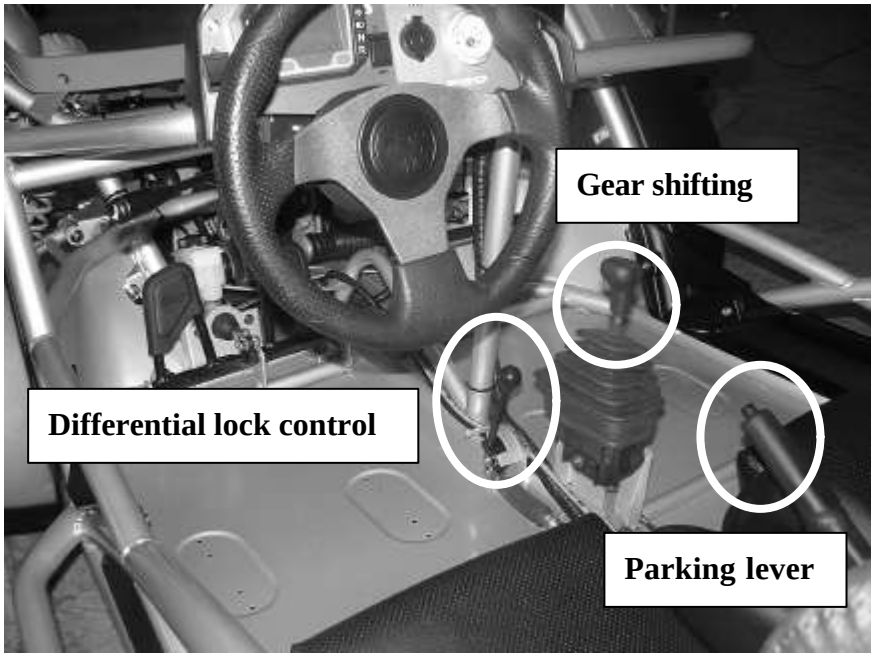

- ■ When shifting the lever to "R", you have to brake the vehicle (by the brake pedal)simultaneously, otherwise the engine will stop automatically for your safety.
- ● the above figure shows 3 controls levers, be aware they all shall be only operated when the vehicle is completely stationery!

G. Gear-shifting lever

There are 5 gear selections as figure shown, and every time you have to push the brake pedal and keep engine speed below 3,000 rpm to operate controlling!

- H: High speed range forward, usually used in on-road condition.
- L: Low speed range forward, usually used in heavy duty condition.
- N: Neutral, the vehicle can' t be moved by the engine.
- R: Reverse
- P: Parking

Attention!

- Shift the gear Only when the buggy is stationary for the machine' s good.
- Keep in "N" or "P" position when you stop the buggy for your safety.
- refer to the gear shift box as right photo, practice making gear lever slide into correct position. Be more familiar with the gear lever shift route, and it will get easier to enjoy driving.

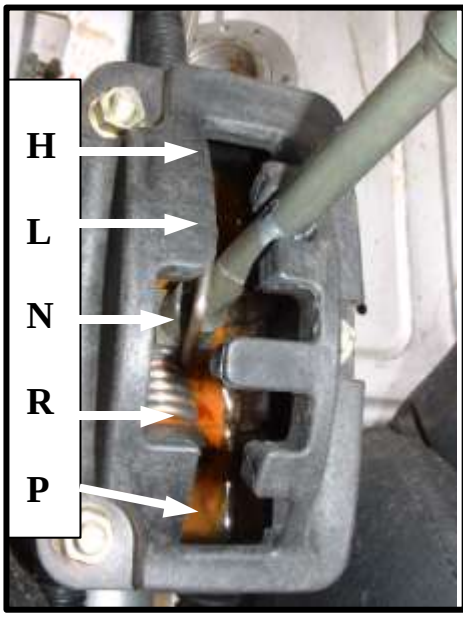

Tips: When shifting, push the throttle pedal a little to help you shifting. But don't exceed 3,000 rpm of the engine speed!

H. Differential control lever

- LOCK: means the differential gear box is ineffective, usually used in Low speed range forward, heavy duty condition.
- UNLOCK: means the differential gear box is effective, usually used in High speed range forward, on-road condition.
- Shift the gear Only when the buggy is stationary for the machine' s good.

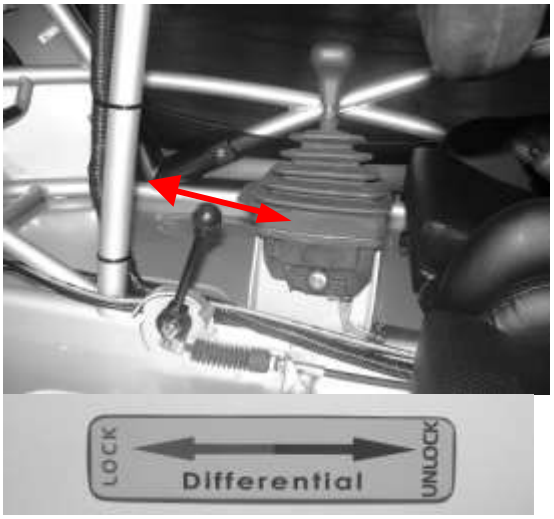

I. Parking Adjustment

- pull back the lever to park the vehicle.
- When parking is active, the vehicle can't move by hand.
- If the parking power isn't enough, screw in the nut(as figure shown) to adjust the power
- Lubricate the adjusting nut whenever maintain the vehicle.

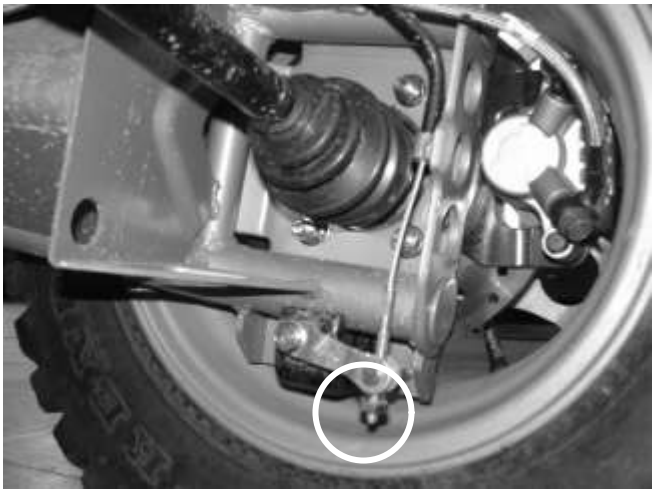

J. Starting And Operation Instructions

a. Before starting the engine, be sure that the driver is seated properly in the buggy with the **seatbelt**.
b. Testing the buggy in an open space at the beginning to learn how to start, turn and stop.
c. Operate the buggy slowly until you are familiar with it.
d. The turning radius of this buggy is small and agile, so the centrifugal force is very high when turning at high speed. Slow down to a more controllable speed when turning to prevent the buggy from rolling over.
e. To prevent vehicle from rolling over, be sure to only turn the vehicle at a slow more controllable speed. Heel on the ramp of the main board when turning. Keep your Leg rely on the foot pedal, you can feel the buggy is stable because of the gravity is adjusted and won't roll over.

Attention!

- Although the vehicle allows you to start the engine at any gear positions, but keep in mind always shifting at "N" or "P" to start the engine is much safer for you!

K. General adjusting parts:

Hand park adjusting nut	Hand park cable adjusting nut
Clearance adjusting nut for throttle Stop bolt for “GO” pedal	Lock nut for throttle cable
	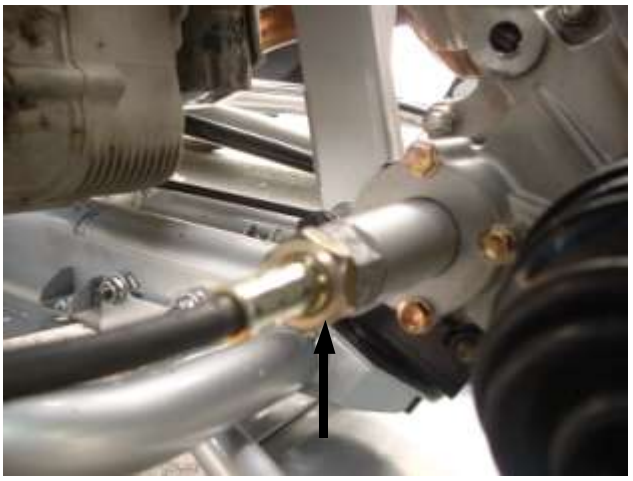
Adjusting nut for shifting cable	Lock nut for differential control cable

INDEX OF TOPICS

MAINTENANCE	**3**

PGO SCOOTERS

In order to achieve safe riding, good performance and reduce pollution, please execute the following recommended maintenance table base upon average driving condition. Driving in unusual dusty areas, require more frequent servicing.

1. BR-500 periodical maintenance table:

Item	Checking Content	MONTHS/DISTANCE(IN KM)FOR CHECKING						
		1 or 1000 km	6 or 3000k	12 or 6000k	9 or 9000k	24 or 12000k	36 or 18000k	48 or 24000k
* Engine oil level check	Check when engine is cold	I	Inspect it per 1,000km					
* Engine oil	Replace 1,500cc when without replace Oil filter. Replace 1,700cc when replace Oil filter together	R	Replace it per 3,000km					
* Oil Filter	Replace	R	Replace it per 6,000km					
* Air filter	Replace it if required	I	I	R	I	R	R	R
* Engine Gear oil	Replace with 250 cc	R		R		R	R	R
* Transmission Gear oil	Replace with 750 cc	R		R		R	R	R
Brake performance	Leaking and function check	I	I	I	I	I	I	I
Brake oil, disk, pad, hose, master cylinder	Leaking and worn-out check or replace it if necessary	I	I	I	I	I	I	I
Cooling water, radiator, hose	Leaking check and clean the radiator if necessary	I	I	I	I	I	I	I
* Clutch linings	Check or replace it if necessary		I	I	I	I	I	I
Tires	Worn-out check or replace it if necessary		I	I	I	I	I	I
* Wheel bearing	Fasten tightly if loosen		I	I	I	I	I	I
* Driving CV joint	Lubricate & check the slack	I	I	C,A,L	I	C,A,L	I	C,A,L
* Chassis suspension arm, spindle	Check looseness. Add grease if required	I	I	C,A,L	I	C,A,L	I	C,A,L
* Steering joint & rod	Check looseness. Adjust it if required			I		I		I
* Absorber	Leaking and function check	I		I		I		I
Parking	Function check or replace it if required	I	I	I	I	I	I	I
Nuts, bolts, fasteners	Tighten it if required	I	I	I	I	I	I	I
Battery	Recharge the battery it required. Clear the poles.	I	I	I	I	I	I	I
* Valve gap	When engine is cool: BR-500: 0.15mm for IN 0.15mm for EX	Check and Adjust it when necessary						
Spark plug	Clear or replace if required		I	I	I	I	I	I
* V belt	Worn out check or replace if necessary.			I	P	R	I	R
* Fuel feeding system	Crack and blockage check. Replace it if necessary.			I		I		I
* Engine idle speed	1500±50 rpm	A	A	A	A	A	A	A
* EMS check	Check and reset the system referring to EMS inspection	A	A	A	A	A	A	A

A: adjust C: clean I: inspect, or replace if necessary L: lubricate R: replace

1. Items with "*" mark indicate our recommendation to have it done by PGO dealer.
2. "**P**" denotes that function check or replace it when the engine performance reduces significantly.

NOTE 1：

The engine oil shall be changed completely after run-in period 1,000 km or one month later. This can make sure the engine runs smoothly.

NOTE 2：

The exchange of brake fluid

1. After disassembling of brake main cylinder or caliper, do change the new fluid.
2. Check the fluid level often, refill if necessary.
3. Change the oil seal of main cylinder and caliper every two years.
4. Change the brake fluid hose every four years.

NOTE 3： water-cooled engine

1. Clean the filter of cooling fan per 3,000 kms.
2. Check the clamping and hoses of radiator system initially 1,000 kms and per 10,000kms for anti-leaking proof.
3. Replace the engine coolant every two years.

Service Information:

Item	Characteristics	**Descriptions**
1	Model	**BR-500**
2	Engine Type	**Single-cylinder, four-stroke engine**
3	Bore	**92 mm**
4	Stroke	**69 mm**
5	Piston displacement	**460 c.c.**
6	Compression ratio	**10.5 : 1**
7	Timing system	**Single head camshaft, 4 valves**
8	Valve clearance	
	intake	**0.15 mm when cold**
	exhaust	**0.15 mm when cold**
9	Engine idle speed	**1600 rpm**
10	Air filter	**sponge**
11	Ignition type	**Inductive, high efficiency, integrated with injection variable advance and separate HV coil**
12	Spark plug	**NGK CR7EKB** **CHAMPION RG6YC**
13	Start-up system	**Electric starter motor with free wheel**
14	Generator	**In three-phase alternating current.**
15	Battery	**MF 12V-12Ah**
16	Fuses	**Chip type; 1A*1/ 3A*2/ 10A*2/ 15A*3/ 25A*1**
17	Lubrication	**By trochoidal pump(inside the crankcase), pressure adjustment by-pass and oil filter.**
18	Lubrication pressure	**4 bar**
19	Minimum allowed (at 100 degree C)	**0.8 bar**
20	Engine oil	**Synthetic SAE 5W/40 of higher quality than API SJ specification.**
21	Engine reduction Gear oil	**TUTELA ZC 90, ~250 cc replacement**
22	Transmission gear oil	**TUTELA ZC 90, ~750 cc replacement**
23	Power supply	**Electronic ignition with electric fuel pump, throttle 38 mm and single injector.**
24	Cooling system	**Liquid, by engine-motored pump, 3-way thermostat electric fan.**
25	Coolant	**Anti-freezing fluid base on monoethylene glycol, CUNA NC 956-16**
26	Tire: Front Rear	**25*8-12** **27*10-12**
27	Transmission reduction: Engine: 2nd gear box: 3rd gear box “L” : 3rd gear box “H” 4th reverse gear box:	 **1 (direct)** **50/20 * 47/14** **2.439** **1.594** **2.593**

SERVICE

A. COOLING SYSTEM

ATTENTION: Service the cooling system ONLY when the engine is COLD !

Reserve Tank

- Coolant level inspection:
  1. Check the coolant level of Reserve Tank. If the level is under the lower line, fill it to the upper line.
  2. Recommended coolant: (Lowest proportion must be over 50% coolant) + (distilled water).

- Coolant replacement: (at least every 2 years)
  1. Coolant draining:
     a. Remove the engine drain bolt.
     b. Remove the inlet hose of front radiator (right lower), or the drain cap of radiator (left lower).
     c. Reinstall the drain bolt and inlet hose of front radiator.

DRAINING:

inlet hose of radiator

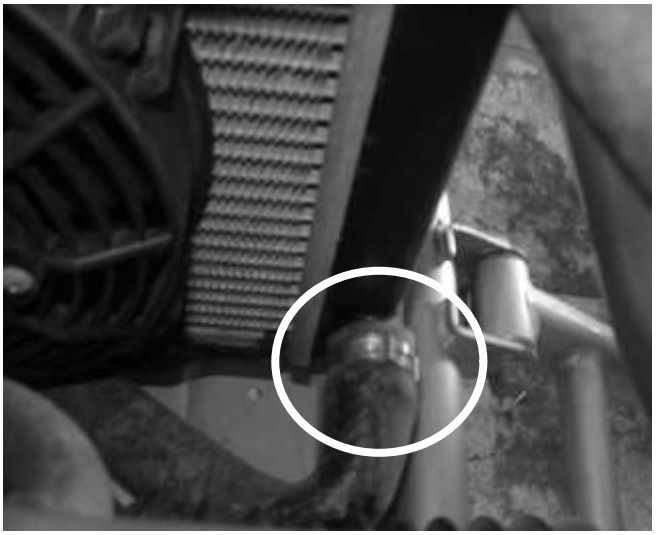

Engine coolant drain bolt

FILLING:

2. Raise the front vehicle about 150cm higher than the rear vehicle, loosen the ventilation screw of engine cylinder head.
3. open the cap of radiator & reserve tank.
4. Fill the radiator with specified ratio coolant from the radiator cap when the engine is stopped.
5. when the coolant flow out from the ventilation screw , start the engine and keep in idle speed, refill the coolant until the flow is steady and without any bubbles. Lock the ventilation screw.
6. The total coolant capacity(step#2 & #3) is about **3,500** C.C.

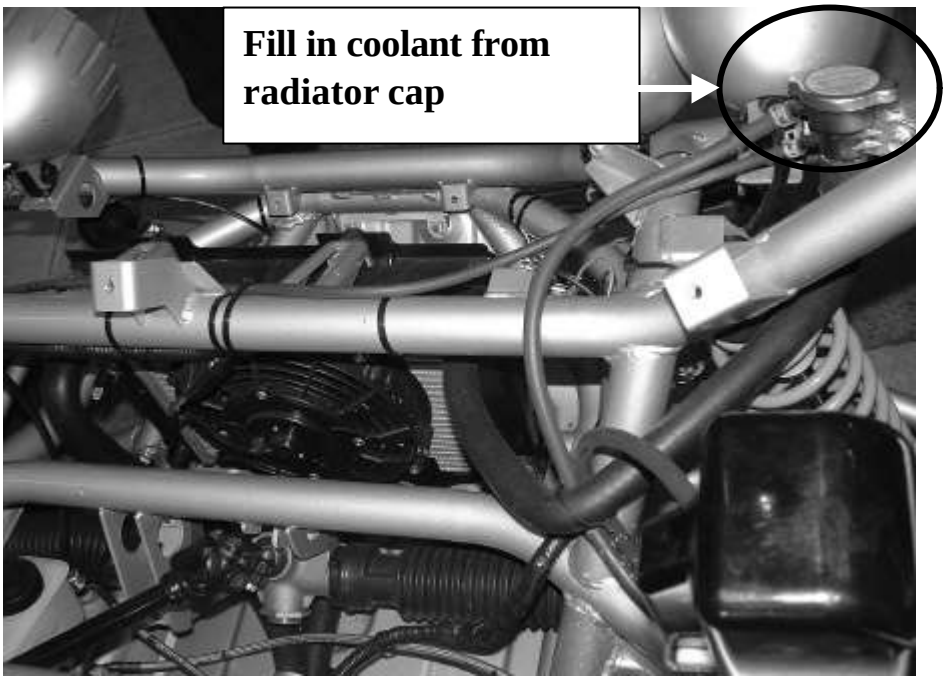

B. SERVICE AIR CLEANER ELEMENT

1. Service air cleaner every 3,000 kilometers (approximately 6 months).

ATTENTION: You must service it more often when used under dusty conditions, even inspect it every time after usage!

2. Procedure
   - Loosen the 9 fixing screws.
   - Remove cleaner cover.
   - Remove air cleaner element.
   - Clean the sponge by compressed air.
   - Check the blow-by and condensate exhaust pipe and empty it, if full.

3. Cleaning
   - The element of BR-500 is sponge type, that means you can maintain it to multiple usage.

   a. Wash the sponge with water and shampoo.
   b. Dry up by small compressed air jets and a clean cloth.
   c. Soak with 50% fuel and oil SELENIA AIR FILTER OIL mixture.
   d. Let the filtering element drip and press it with your hands without squeezing.
   e. Replace the filtering element.

   Caution: Never let the engine run without air filter. This would cause an excessive wear of cylinder and piston and would damage the injector.

4. Model photo

Outside cover

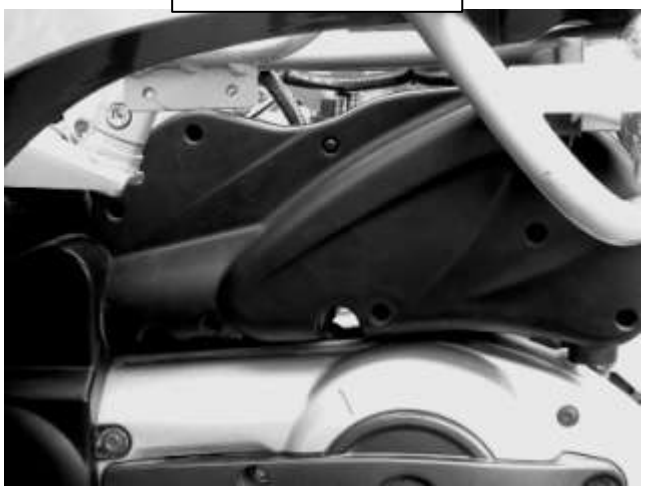

Sponge element

C. SERVICE ENGINE OIL AND FILTER

➢ **Replace engine oil:** You must change the oil in the crankcase after the first 1,000 kilometers of use thereafter. That will insure proper lubrication of internal parts and prevent costly repairs due to excessive wear.

1. Start the engine, and warm it up about 3 minutes, and then stop it.
2. After about 5 minutes, remove the oil gauge cap, drain the engine oil.
3. Remove and clean the net filter of the draining bolt.
4. Fill in approx. 1,700 cc of engine oil when replace the oil filter together.

(Fill in only 1,500 cc of engine oil when without replacing the oil filter.)

5. Repeat step #1~2, check the oil gauge, make sure the oil level is between the MAX and MIN.
6. Check oil level before each use of kart or after each 1,000 kilometers of operation. Add oil to bring up to proper level. Do not mix various grades of oil.

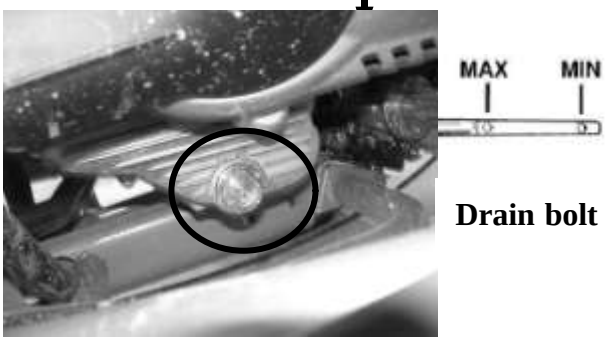

➢ **Replace engine oil filter:**

1. Use a filter tape wrench to remove the oil filter.
2. Make sure that the O-rings of pre-filter and oil filter are not worn.
3. Lubricate the O-ring and replace net filter and oil filter; tighten with below torque:
   - Engine oil draining bolt: 24~30 N-m
   - Oil filter: 12~16 N-m
4. Replace a new oil filter after lubricating the O-ring, then screw it up to touching the gasket and tighten further the recommended torque.

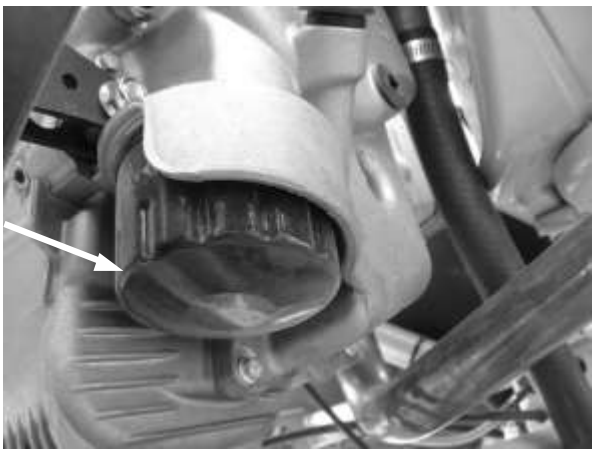

D. SERVICE GEAR OIL

- Please change the oil after first 1,000km ride, then it is recommended to change the gear oil every 6,000km.
- Regular changing volume : 250 c.c. (SAE 140 TUTELA ZC 90)

Fill-in Cap

Oil draining bolt

E. SERVICE AIR CLEANER ASSEMBLY

On the occasion to replace the air cleaner assembly.

1. dismantle the rear rack first to make the air cleaner body could be removed or installed easily.
2. Pay attention to the front housing of air cleaner assy., it shall be engaged to the engine case bracket properly, then lock the screw.

F. SERVICE DRAINING THE PCV TUBE OIL

1. The oil of Positive Crankcase Ventilation(PCV) accumulates in the air cleaner PCV tube as shown.
2. Take off the plug to drain the oil about per 500 kilometers before the oil is full of the whole PCV tube, otherwise the engine performance will be greatly reduced.
3. After draining the oil, be sure install the plug and clip back well.

G. SERVICE CLEANING THE AIR INLET of CVT TRANSMISSION

1. Continuous Variable Transmission (CVT) sucks fresh air to reduce the high temperature inside.
2. To have longer life for the CVT parts, such as V-belt, you have to maintain the air inlet. So we recommended you to clean the inlet about per 1,000 kilometers.
3. Even clean it every time after u[illegible] road environment.

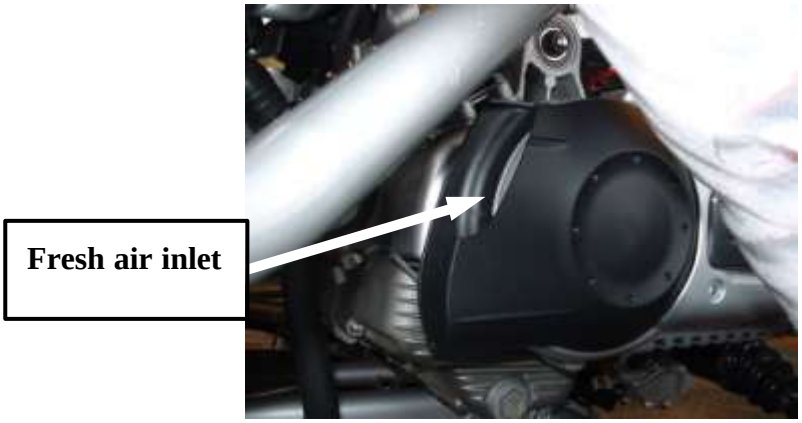

H. CLEANING THE INSIDE of CVT TRANSMISSION AND CHECK PARTS

- this vehicle is equipped with Continuous Various Transmission(CVT) mechanisms. The parts inside are all consuming parts, that means you have to pay attention to service them.
- Clean the dust, powder..etc. inside the CVT periodically about 2000~3000 kilometers.
- Check the V-belt, if there is any crack occurs, replace it.
- Check the o-ring as right figure shown, lubricate it or replace it when it worn- out .

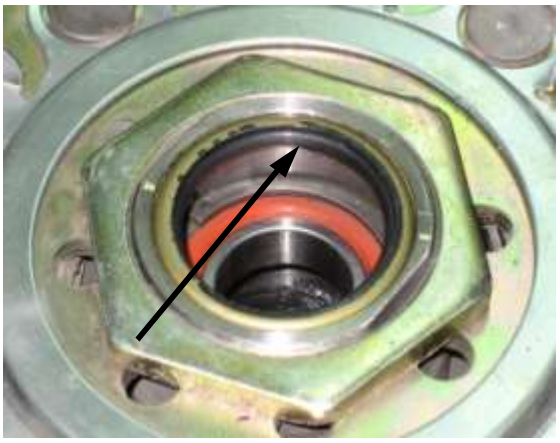

I. SERVICE THE GASKET of MUFFLER

1. There are 2 sections of the muffler, and they are coupled by a clamp as shown:
2. There is a gasket inside the clamp to avoid leakage, be sure to replace it when leakage occurs.

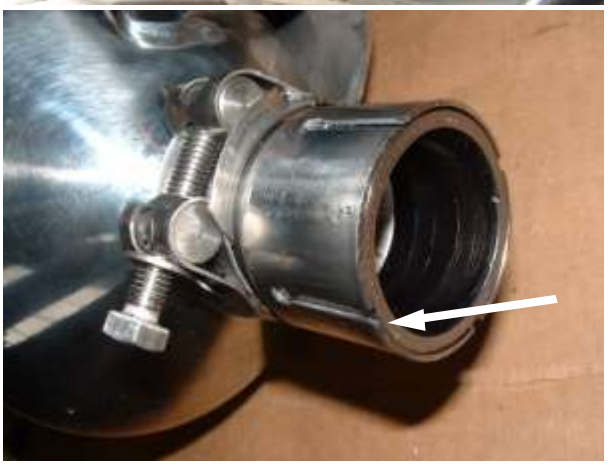

I. Spark Plug

1. Remove the spark plug and inspect it each time you change the oil. (Use a spark plug wrench) The electrodes should be kept clean and free of carbon. The presence of carbon or excess oil will greatly reduce proper engine performance. If possible, check the spark plug gap (area between electrodes) using a wire feeler gauge.

   This specification is 0.7~0.8mm.

2. Before installing spark plug coat threads lightly with graphite grease if possible, to ensure easy removal next time the spark plug needs inspection.
3. It is advisable to replace the spark plug at least once a year to insure easy starting and good engine performance.

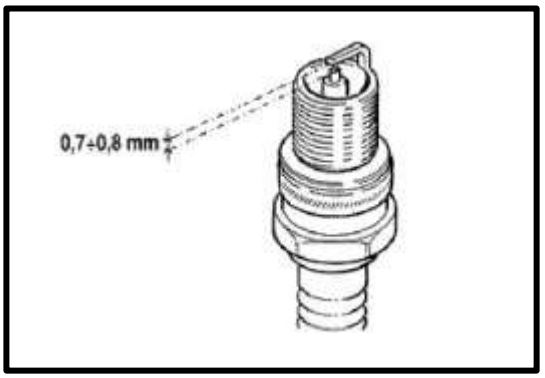

J. Idle Adjustment

Never make unnecessary adjustments. The factory recommended settings are correct for most Applications. Meanwhile this kart' s idle is controlled by EMS(Electric Management System), you don' t have to adjust the idle speed. But however you still have to make sure the throttle cable clearance as follows:

1. Make sure the front section is well nut locked as right figure shown, adjust the clearance by moving the nut if necessary.
2. Make sure the rear section is well nut locked as below figure shown, adjust the clearance by moving the nut if necessary.
3. The recommended idle speed is 1,600RPM (BR-500), make sure the throttle cable clearance and can snap back suddenly after release for your safety !

K. Cleaning Instructions

Keep your kart clean. With a clean rag, wipe off and dirt and oil from around controls. Wipe off any spilled fuel and oil. Keep the engine clean of foreign object and be sure to check that air intake fan is free of debris for proper cooling.

L. Kart Lubrication

Lubricate vehicle every 90 days of use.

M. Driving shaft Lubrication

1. To increase driving shaft life, it should be lubricated with grease inside the rubber.
2. Check the rubber, make sure there is no any grease comes out from it . If the rubber is wear defect, contact your dealer to replace a new one.

engine side of CV joint

Wheel side of CV joint

N. Adjustment of Front And Rear Shock Absorber

The absorbers can be adjusted depending on the loading conditions.

1. Use a round nut wrench to loosen the lower nut.
2. the tension of shock spring will increase as you screw the upper nut to right, decrease as you Screw to the left.
3. Tighten the lower nut finally.

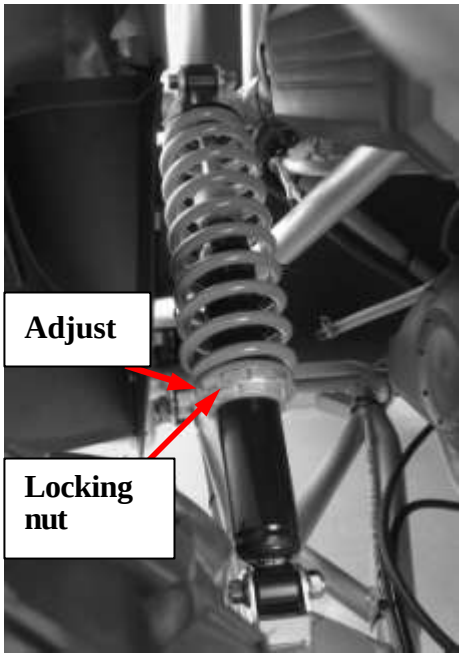

O. Storage Instruction

In the event your kart is not to be operated for a period in excess of 30 days or at the end of each driving season prepare of storage as Follows:

1. Drain fuel tank and fuel pipes by allowing engine to run out of fuel, and use a fuel stabilizer.
2. Lubricate engine cylinder by removing the air cleaner, then spray engine fogging oil though the carburetor until motor dies.
3. Do not save or store gasoline over winter. Using old gasoline, which has deteriorated from storage, will cause hard starting and affect engine performance.

Check and replacement

Warning :The spark plug must be removed with cold engine. The spark plug should be checked every 6,000 km and replaced every 12,000 km. The use of non-conforming ignition controllers, and spark plugs other than those prescribed can seriously damage the engine.

Recommended spark plugs:

CHAMPION RG6YC

NGK CR 7 EKB

- Rest the vehicle on the central stand.
- Open the port on the left side of the vehicle by removing the relevant screw and levering onto the bottom side in the special recess.
- Disconnect the spark plug H.V. cable cap.
- Unscrew the spark plug, using the spanners supplied.
- Inspect the spark plug, the insulator's integrity, too worn or sooty electrodes, sealing washer state, and measure the distance between the electrodes using the special thickness gauge.

Distance between the electrodes: 0.7 ~0.8 mm

Adjust the distance, if required, by bending the side electrode carefully. In case of irregularity, replace the spark plug with one of the recommended type.

- Insert the spark plug with the proper inclination, and screw it thoroughly by hand, then tighten it using the special wrench.

Tightening torque: 12 ~14 N-**M**

- Insert the cap over the spark plug thoroughly and proceed to re-assembly.

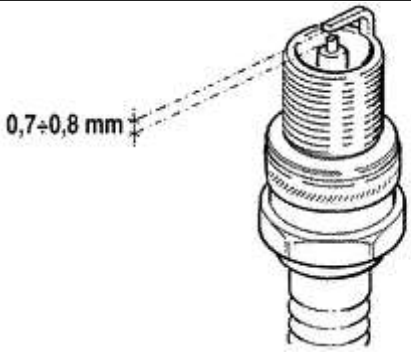

- Loosen the 9 fixing screws and remove the cleaner cap.
- Remove the filtering element.
- Replace the air filter with a new one.

Check the blow-by and condensate exhaust pipe and empty it, if full.

Cleaning (Every **3**,000 Km):
- Wash with water and shampoo.
- Dry up by small compressed air jets and a clean cloth.
- Soak with 50% fuel and oil SELENIA AIR FILTER OIL mixture.
- Let the filtering element drip and press it with your hands without squeezing.
- Replace the filtering element.

N.B. : Failure to observe the rules regarding the filtering element cleaning could cause an improper lubrication of the same.
A poor lubrication affects the filtering capacity.
An excessive lubrication causes a concentration of the carburetion.

Caution**:** If the vehicle has ridden on dusty roads, the air filter must be cleaned more frequently than what indicated in the scheduled maintenance table.

Caution**:**Never let the engine run without air filter. This would cause an excessive wear of cylinder and piston and would damage the carburettor.

Engine oilis used in 4-stroke engines in order to lubricate the timing gears, the benchsupports and the thermal group.
An insufficient quantity of oil can cause seriousdamage to the engine itself.
In all 4Tengines, the decay of the oil characteristics, as well as a certain level ofconsumption, should be considered normal, especially during running in.Consumption can particularly reflect the conditions of use (e.g.: when drivingat full acceleration all the time, oil consumption increases).

Level check

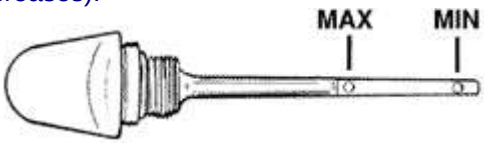

This operation should be carried out on cold engine, according to the following procedure:

1) Rest the vehicle on a flat ground.
2) Unscrew the cap/bar (A**),** dry it with a clean cloth and reinsert it, screwing it thoroughly.
3) Remove the cap/bar again and check that thelevel is between the max and min levels; top up, if required.

The MAX level reference means that in the enginethere is an oil quantity of about 1700 cc.
If the check is carried out after the vehiclehas been used, and therefore with a hot engine, the level line will be lower;in order to carry out a correct check it is necessary to wait at least 10minutes after the engine has been stopped, so as to get the correct level.

Oiltop up

The oil should be topped up after having checkedthe level and in any case by adding oil **withoutever exceeding the MAX level**.
Restoring the level between MIN and MAXrequires a quantity of oil of ~ 400 cc.

Indicator light (oil pressure low)

The vehicle is equipped with a warning light on the instrument panel that lights up when the key is turned to the **(**ON) position.
However, this light should switch off once the engine has been started.
If the light turns on during braking, at idling speed or while turning a corner, it is necessary to check the oil level and the lubrication system.

Caution: Do not disperse oil in the environment. Oil,gasket and filter should be disposed of according to the regulations in force.

Warning : Avoid touching parts of the engine when hot,as this may cause burns.

- Remove the silencer. - Remove the loading cap (A)	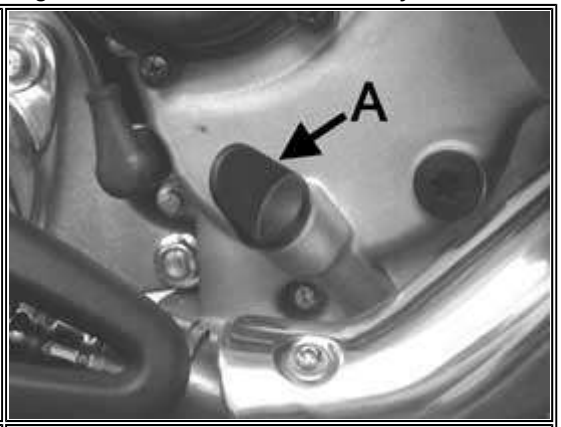
- Remove and clean the net filter of the drainage cap "B" using compressed air.	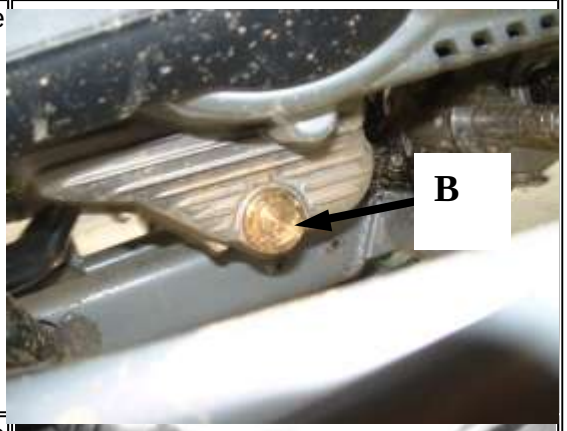
- Use a filter tape wrench to remove the cartridge filter "C". - Make sure that the O-rings of pre-filter and drainage cap are not worn. - Lubricate the O-rings and replace net filter and oil drainage cap; tighten at the prescribed torque. - Replace a new cartridge filter after lubricating the O-ring, then screw it up to touching the gasket and tighten further to the prescribed torque.	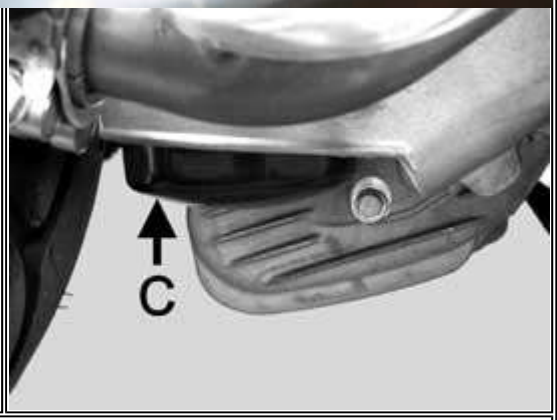
- Replace the silencer. -- Fill in approx. 1700 cc of engine oil. ---/span>Start the engine, let it run for a few minutes and stop it. ---After about 5 minutes, check the level and top up if necessary without never exceeding the OIL level	
N.B. :If oil is replaced without replacing the cartridge filter (1?coupon), fill with approx. 1500 cc instead of 1700 cc since a part of the lubrication circuit is still full.	

Tightening torque:

Engine oil drainage cap: 24 ~30 N-M

Oil filter: 12 ~16 N-M

Oil used: Selenia HI Scooter 4 Tech

- Take the vehicle to a flat ground and rest it on the central stand. - Unscrew the oil bar (A) dry it with a clean cloth and reinsert it, screwing it in thoroughly. - Pull out the bar and check that the oil level is between the MAX and MIX levels indicated on the bar (see figure); if the level is below the MIN value, restore the proper amount of oil in the hub. - Screw the oil bar back on, checking that it is tightly in place.	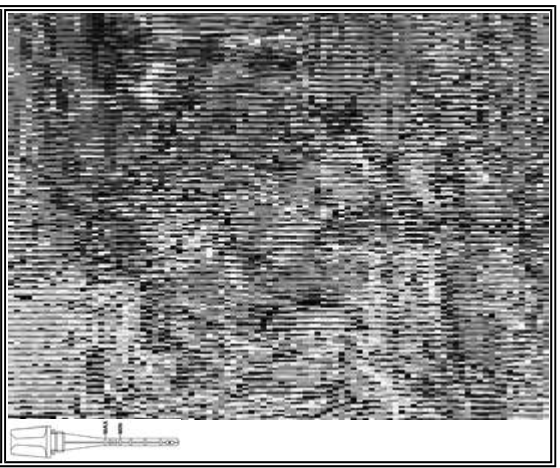
-- Prepare a suitable container. - Remove the oil loading cap (**A**)	
- Remove the oil drainage cap (**B**) and let the oil drain out completely. - Tighten the drainage cap again and fill the hub with oil. -Remove the oil loading cap **.** **Recommended oil: TUTELA ZC 90** **Prescribed oil quantity ~ 250 cc**	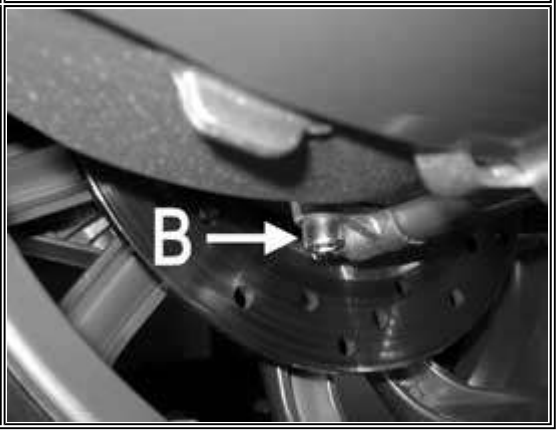

Filling the engine cooling fluid.
The fluid level inspection should be carried out every 6,000 km when the motor is cold, following the methods indicated below:
- Rest the vehicle on a flat ground

-
--remove the expansion tank cover located on the right side of the vehicle.
- Remove the expansion tank cap and top up, if the fluid level is near to or below the MIN level into the expansion tank.
The fluid level should always be between the MIN and MAX level.

- To check the level, look into the expansion tank: a notch into the filler indicates the MIN and MAX level.
- The cooling fluid consists of a mixture of 50% demineralised water and ethylene glycol and corrosion inhibitors based anti-freeze solution.

Caution: To prevent leaks of the cooling fluid from the expansion tank during the use of the vehicle, never exceed the MAX level upon filling.

N.B.: The cooling fluid consists of a mixture of demineralised water and fluid for sealed circuits.
The resulting mixture allows a decrease of the freezing point to -35C.
The mixture at a pressure of 0.9 bar increases the boiling point to approx. 125C.
The recommended fluid is also protective for aluminium alloys, and over time this feature may decrease.
Periodical replacement is therefore advisable.

N.B.To replace the cooling fluid and vent air from thecircuit, see Chapter.

- Remove thespark plug cap with cold engine.
- Remove theignition spark plug.
- Fit acompression test gauge into the spark plug seat using a 10-mm spark plug unionat the proper tightening torque. Disconnect the strokerevolution sensor connector.

-Letthe engine run by the starter and with the throttle body in fully open positionas long as the gauge value is steady. If pressure is correct (> 11 bar),remove the tool and reinstall the spark plug, the cap and the stroke revolutionconnector.

-Ifthe pressure is less than what indicated, check the rpm at which the test iscarried out;

ifit is less than 450 rpm, check the start-up system; if not, check thefollowing:
-Timing

-Valveclearance

-Valveseal

-Liningseal

-Propercompression ratio selection
>Tighteningtorque:
Compression test union: 10 N-M

.

- To check the valve clearance, make the timing point references collimate as described in the previous paragraph. - Use a thickness gauge to check that the clearance between valve and register matches the indicated values. If the valve clearance values for intake and exhaust respectively do not match those reported below, adjust them by loosening the lock nut and using a screwdriver, as shown in the figure.	

Intake: 0.15 mm when cold

Exhaust: 0.15 mm when cold

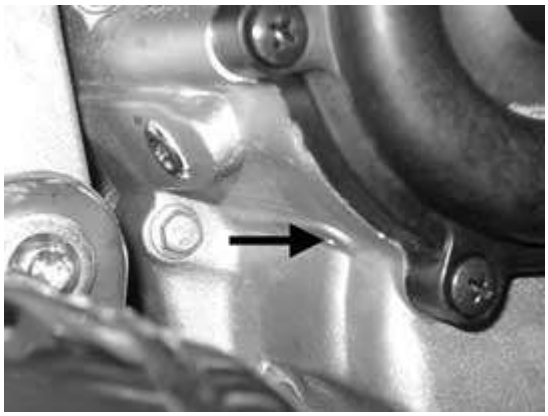

In case of noise or fluid leaks from the water pump drainage hole, inspect the pump as described in the " Water Pump " chapter

Proceed to carry out a few preliminary operations as described below:
- Rest the vehicle on the central stand and on a flat ground.
- Remove the bottom RH side and the RH footboard as described in the "Body" chapter.

- Remove thesilencer to access the flywheel cover, as described in the "Engine"chapter.
- Empty thecooling system, removing the hoses located on the water pump cover and theloading cap located on the expansion tank.

Caution: This operation should be carried out on coldengine.

- Open thewater pump cover shown in the figure by loosening the 6 fixing screws.
- Cooling systemcapacity: ~ 1.7 lt.
- Follow theinstructions provided in the "Engine" chapter to partly discharge thesystem and to inspect the pump.
- Once thefault has been fixed and all components have been replaced, fill and drain thesystem again.

N.B.: To replace the cooling fluid, see the charter.

INDEX OF TOPICS

COOLING SYSTEM	4

System description

The coolingsystem is of the forced circulation type, with continuous venting and airpressurisation.
Circulationtakes places by a centrifugal pump driven by the countershaft.
The pumpdelivers the cooling fluid to the thermal unit.
The two-waythermostat support is connected in output to the head. One way is connected tothe pump and the other to the radiator (of the horizontal circulation type).
The radiatoroutput is directly connected to the pump.
Theexpansion tank is connected in parallel to the radiator.
The radiatorhot box is connected to the upper side of the expansion tank (in air).
The radiatorcold box is connected to the lower side of the expansion tank (in the fluid).
When theengine is cold, the thermostat output to the radiator is closed, even thoughthere is still a little flow for de-aeration obtained by a hole into theclosing plate.
In thiscase, the circulation into the thermal unit is active to ensure an evenheating.
Once theworking temperature has been reached, the main circulation on radiator andexpansion tank starts.
With thesmall openings in the thermostat there is a flow overlapping (recirculation andmain one).
When thetemperature is higher, the thermostat allows excluding the recirculation tofavour the main circulation.
In thiscase, the flow is consistent in the expansion tank as well, and this ensures acontinuous automatic venting.
For thesystem venting during the circuit filling step, there is a specific union atthe top of the head (see filling rules).
To ensurecooling in case of poor dynamic ventilation, there is an electric fancontrolled by the injection system.

- Prepare the mixture of 50% water and cooling fluid. - Fill the system to reach a level ranging between the MIX and MAX levels indicated in the expansion tank filler. - Do not close the expansion tank with the cap.	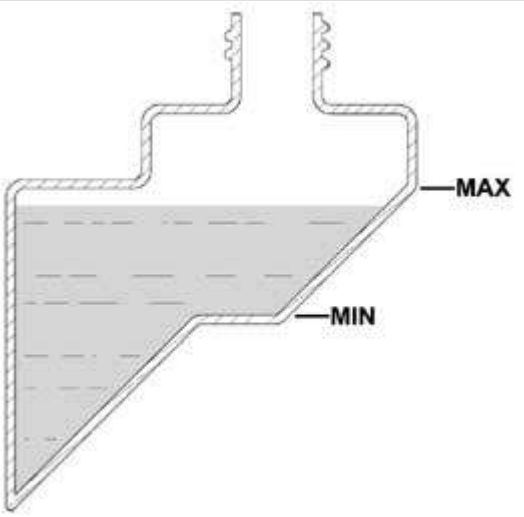
- Use a transparent hose to connect the venting union with the expansion tank filler. - Loosen the vent and start the engine.	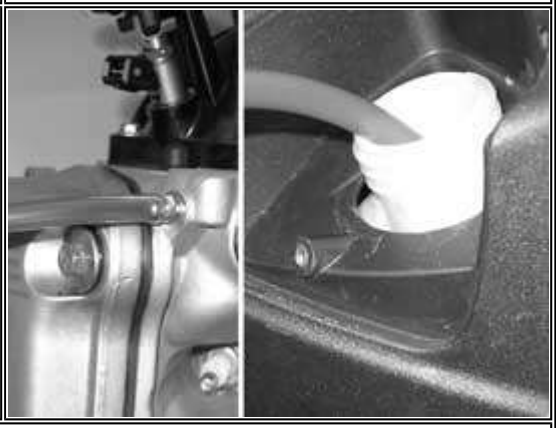
- Keep it open until the air has been fully vented. - Close the venting screw. - Stop the engine. - Restore the level into the expansion tank and tighten the cap. - Start the engine and let it warm up to reach the electric ventilation temperature. - Stop the engine. - Restore the level with cold engine.	

Caution ?Electric ventilation is controlled by thetemperature measured at the head.
The electric ventilation start does not mean that theventing has been completed.
Venting is complete when the expansion tanktemperature rises.

.

Cooling system capacity	1.7 l
Prescribed fluid	Mixture of 50% water and fluid for sealed circuits (PARAFLU 11 FE)
Sealing pressure	Cap calibrated at 0.9 bar

THERMOSTAT	Type	wax, with deviator
	Starts opening	82 ?2蚓
ELECTRIC VENTILATION	Type	Piston
	Electric ventilation start	107蚓
	Electric ventilation end	103蚓
WATER PUMP	Type	Centrifugal
	Control	Coaxial at the countershaft
RADIATOR	Type	Aluminium, with horizontal circulation
EXPANSION TANK	Calibration	Automatic venting, in parallel with the radiator

Before proceeding to disassembly, carry out a few checks:
- Connect the diagnostic tester and select the "PARAMETERS" function (see "Injection" chapter);
- Start the cold engine and let it warm up.
- Make sure that there is a sudden increase of temperature.

N.B. There should be a slight and gradual heating caused by a small passage on the thermostat to the OFF position.

Specific equipment and tools:

Injection diagnostic tester: 020460Y

- Check the temperature read by the diagnostic tester. Thermostat opening start: ~ 80蚓

- If opening occurs at different temperatures, check the thermostat.
- Remove the thermostat as described in the flywheel cover paragraph.

- Visually check that the thermostat exhibits no mechanical faults.
- Prepare a metal container with ~ 1 litre of water.
- Immerse the thermostat keeping it in the middle of the container.
- Immerse the multimeter thermometer probe close to the thermostat.
- Heat the container by the thermal gun.

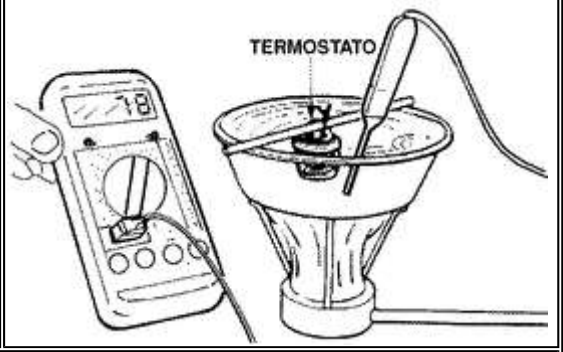

- Heat the water and periodically pull the thermostat out until its opening becomes visible.
- Insert a thin copper wire between the seat and the thermostat closing plate.
- Keep the wire into position until locking up is perceived.
- Let water and thermostat cool down.
- Progressively heat the water keeping the thermostat immersed by the wire.
- Check the opening temperature when the thermostat releases from the wire.

Opening start temperature ~ 80?C

Specific equipment and tools:

Multimeter 020331Y Heater 020151Y - Heat to obtain the thermostat full opening. **N.B.**: Heating should be gradual. **Caution** ? Avoid contact between thermostat and container for a correct test performance.	
- If incorrect values are detected, replace the thermostat. - Repeat the filling and venting procedure.	

- Connect the injection diagnostic tester and select the menu on the "ERRORS" function. - Check any failures in the electric fan control circuit (see[11]?Injection ?/span> hapter). Specific equipment and tools: Injection diagnostic tester020460Y	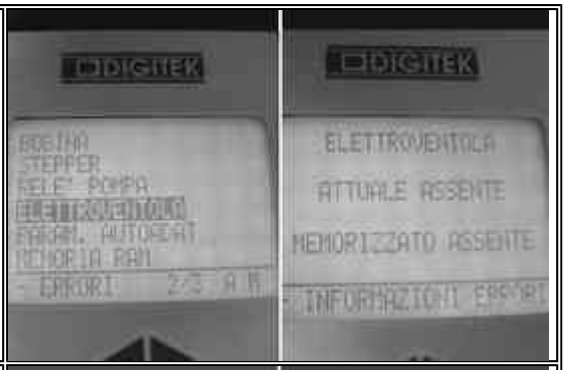
- Select the menu on the "ACTIVE DIAGNOSIS" function and start the electric fan operation simulation (see[11]?Injection ? charter). - If the electric fan is certainly efficient, check the ventilation start and end temperature.	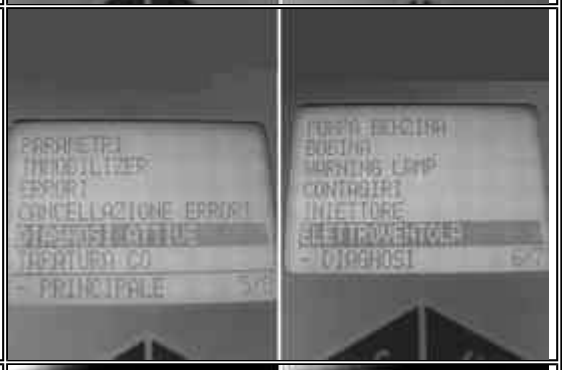
- Select the menu on the "PARAMETERS" function to display the cooling fluid temperature. Electric fan start: 107?C Electric fan stop: 103?C - If non-conforming values are detected, replace the injection controller (see "Injection" chapter). - If the analogue instrument temperature is close to the red zone, but the degrees indicated by the diagnostic tester is below the electric ventilation temperature, check the temperature sensor on the head and the relevant injection circuit (see [11]?Injection ? chapter).	

N.B.: The electric ventilation temperature at 107?C can only be managed with a system supplied with a 50% mixture and pressurised at 0.9 bar.
Avoid starting the engine without pressurisation since it may reach the boiling temperature before the electric ventilation starts.
In case of increase of the electric ventilation time, check the thermostat opening temperature and check that the cooling fluid density is correct. The optimum density is obtained with a 50% water and cooling circuit fluid mixture.

- Check the proper circuit sealing when it is in pressure and at the temperature.	
- For a more accurate check, wait until the system has cooled down since small leaks may not be visible due to evaporation.	
- The water pump is provided with a drainage hole in case of leaks from the cooling system mechanical seal, or from the shaft sealing oil guard.	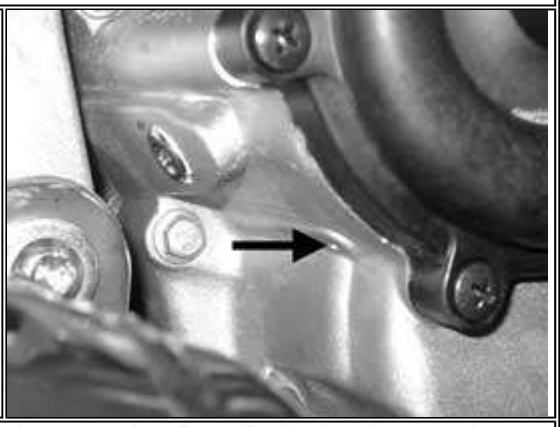
- If cooling fluid or oil leaks are detected, inspect the pump (see[1005]?Flywheel cover ?/span> hapter).	

N.B.: Do not use oils or greases while fixing thecooling system. Failure to observe this regulation can cause irreversibledeformation to the sealing gaskets.

.
.

1- Check the expansion tank cap efficiency. N.B.: The cap is provided with an overpressure valve calibrated at 0.9 bar. There is also a valve that must allow air inlet during the cooling step. YESgo to 2NOgo to 3
2 - Check the head gasket seal (see "Thermal unit and timing system" chapter)
3 - Replace the cap.

1 - Oil into the cooling fluid. YES go to 2
2 - Check the head gasket seal (see "Thermal unit and timing system" chapter).

1 - Check the system outside seals as described above. YESgo to 2NOgo to 3
2- Check the head gasket seal (see "Thermal unit and timing system" chapter) - If water leaks are detected in the engine oil, inspect the pad on the head cooling circuit.
3 - Fix any damaged seals.

ELECTRIC SYSTEM 5

ELECTRIC PARTS

1.Electric Control Unit(ECU)

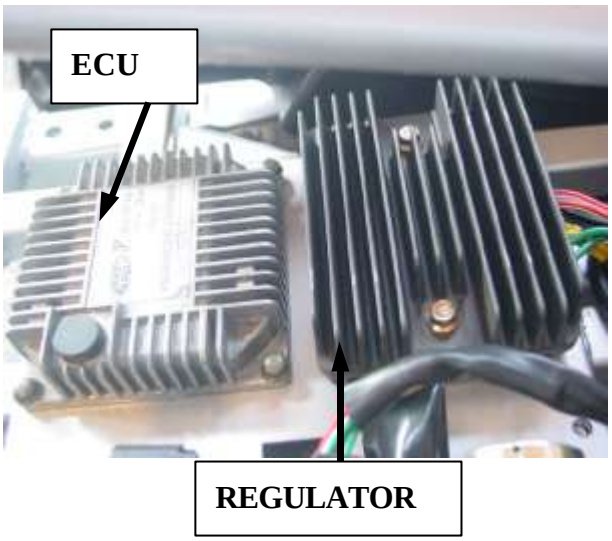

2.Fuel pump

- the fuel pipe shall be well engaged and clamped, check if there is fuel leakage always.
- Replace the fuel filter periodically.
- Make sure the fuel gauge can move freely up and down.
- The full capacity of fuel tank is about 20 liters, whenever the fuel indicator twinkling (only about 5 liters left in fuel tank), you have to fill the fuel as soon as possible. Otherwise it might damage the fuel pump for long time lacking fuel.

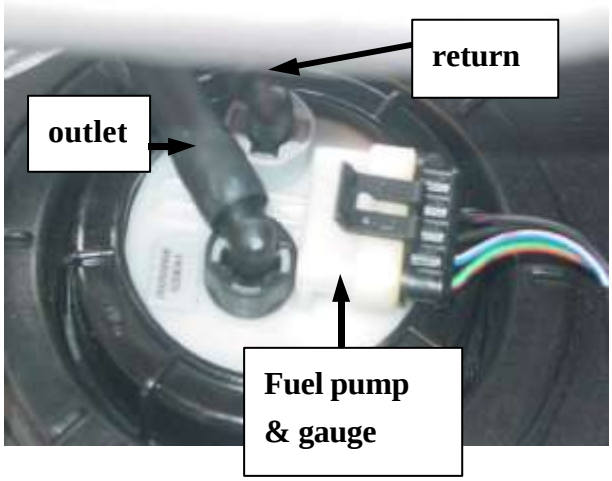

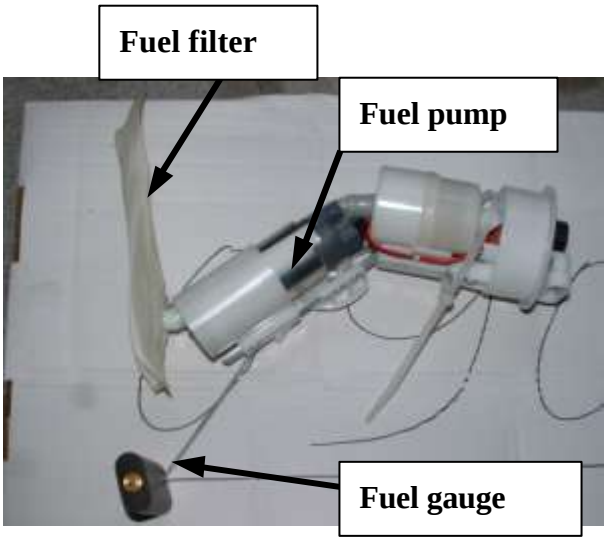

3.Ignition coil

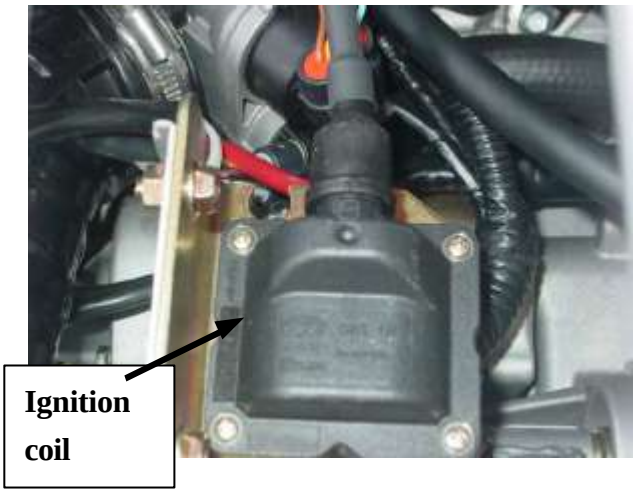

4.Neutral sensor

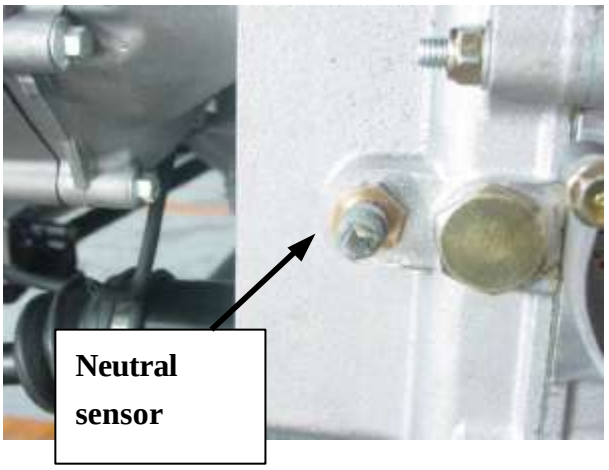

5.Oil pressure sensor

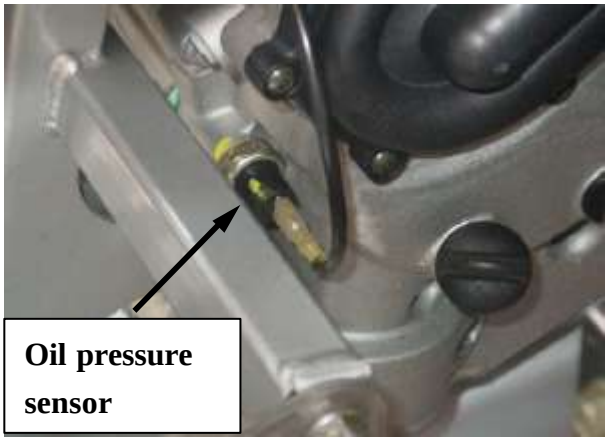

6.Gear shift controller

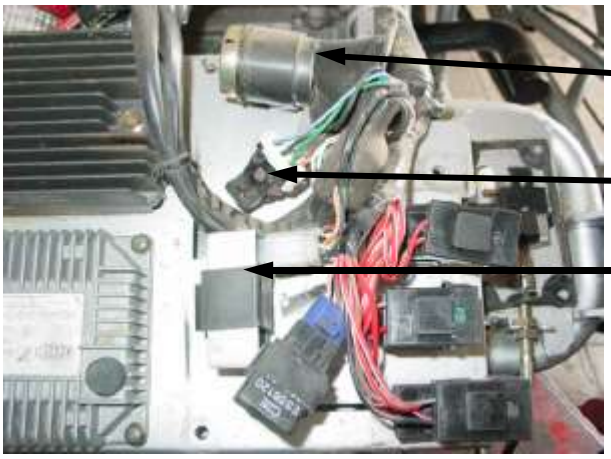

Only when engine speed between 1000~3000 rpm & push the brake pedal, that controller permit the solenoid valve act!

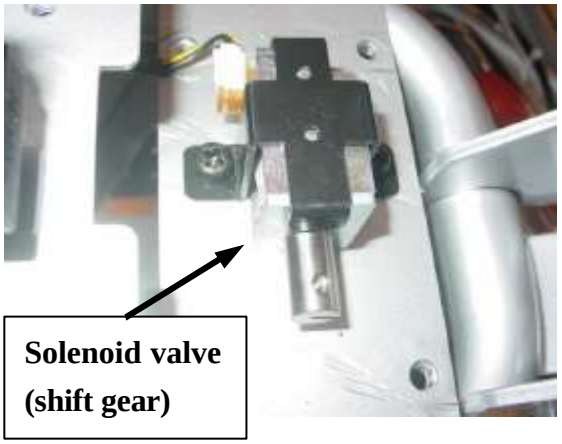

Solenoid valve (shift gear)

Attention: it' s necessary to adjust the solenoid cable to make gear shifting easier for a period of operating the vehicle.

- **Right illustrated is the related circuit:**

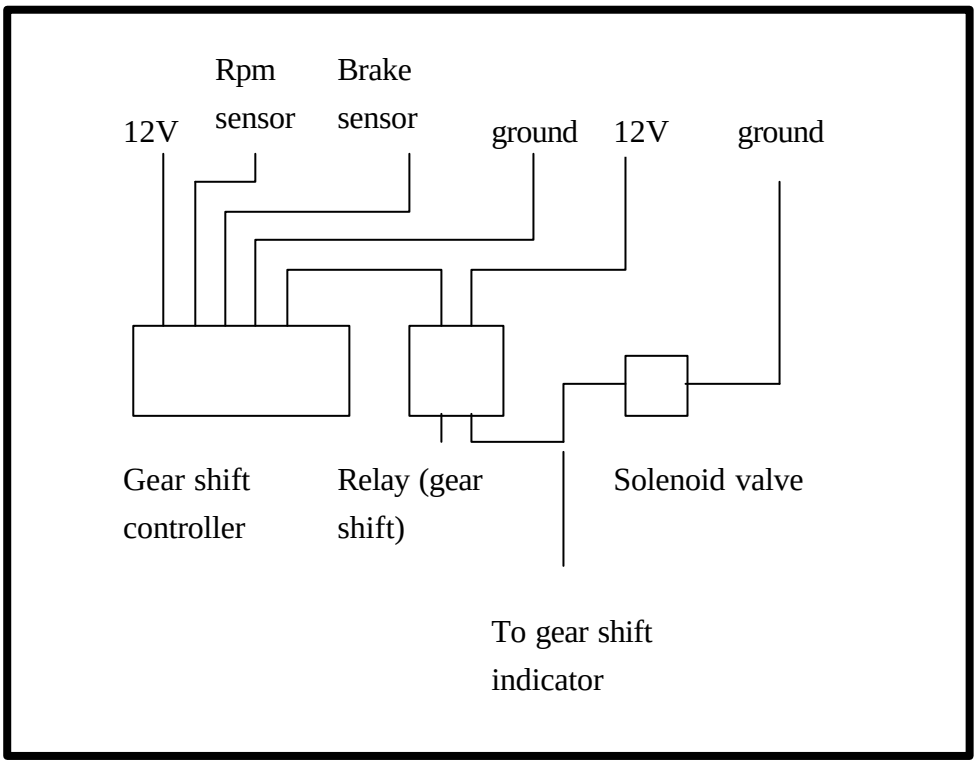

7.Relays:

Red: main relay
Blue: high beam relay
White: low beam relay
Black: cooling fan relay
White: fuel pump relay

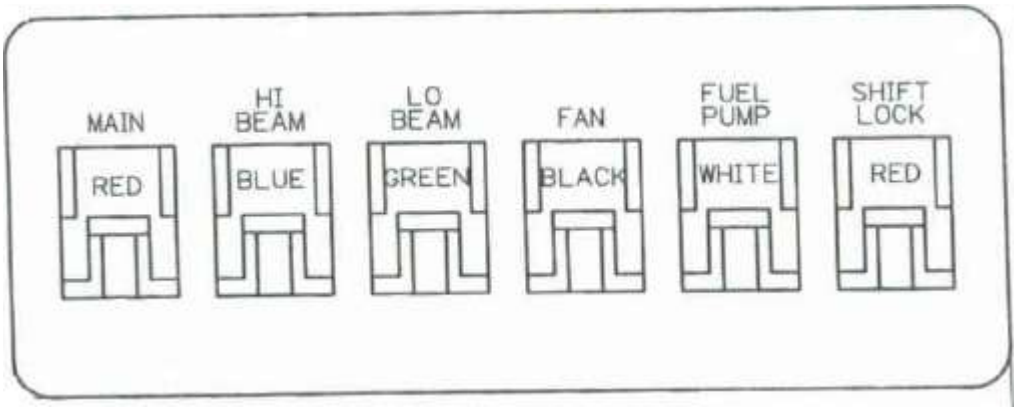

- **check the relays**

a. Find the control coil by measuring the resistance.

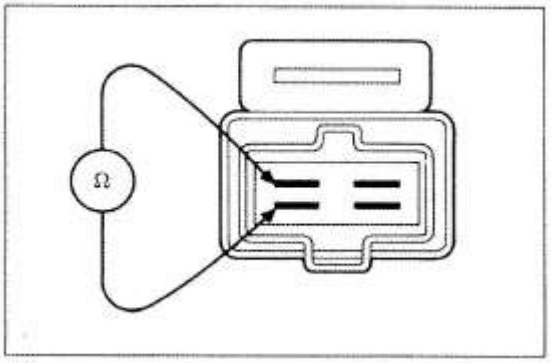

b. Connect green/white cable to positive pole of battery, connect black cable of negative pole of battery, It means starter is function well if above connection and both Red Black cable of staring motor have currency passing through.

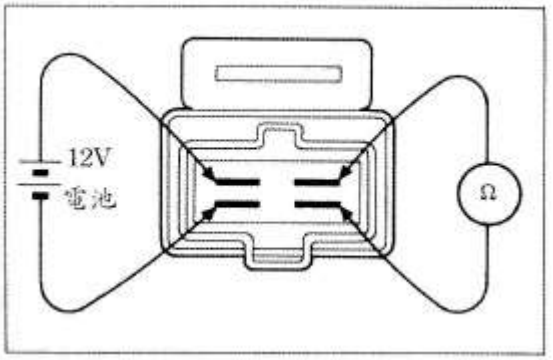

8.Headlamps

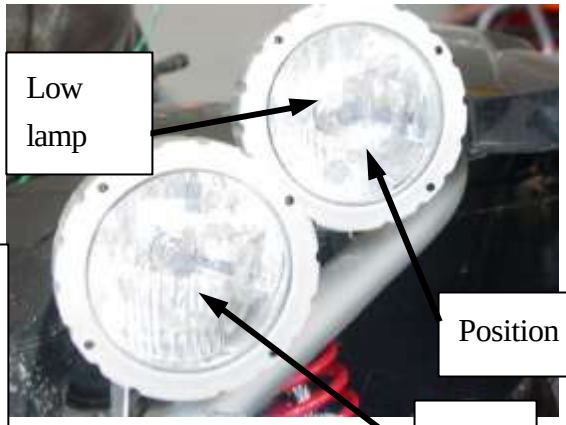

When switch to low beam, only low lamp is ON. When switch to high beam, both high lamp & position lamp are ON.

- adjusting the height: loosen the bolt under the headlamp, adjust the height to your target, then lock the bolt.

9.Fuses:

- ➢ the recommended fuses are:
- 1A*1
- 3A*2
- 10A*2
- 15A*3
- 25A*1

NOTE: when replacing the fuses, always use the specification as original manufactured.

➢ right is the individual fuse and related parts indication:

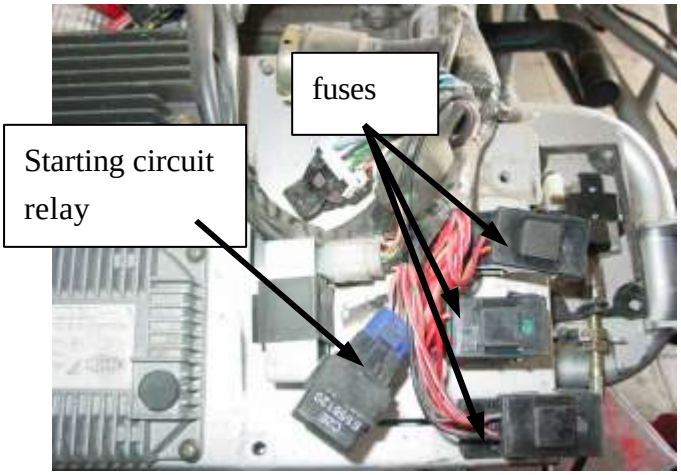

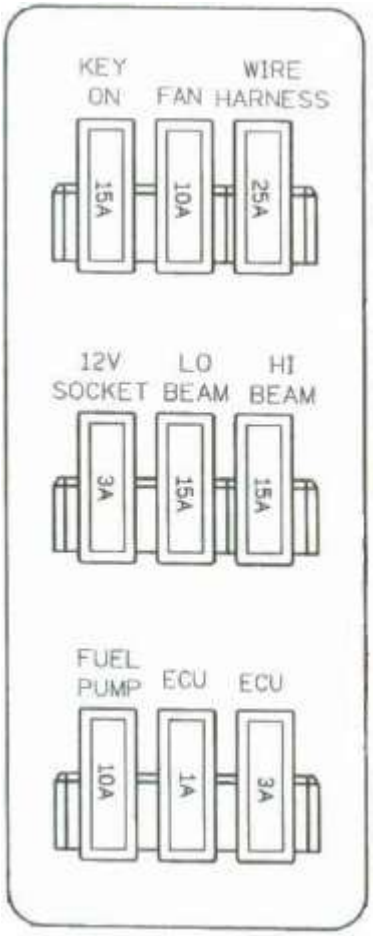

10.Engine Management System(EMS) units

12V power supply units:

- injector
- Air temperature sensor
- Throttle position sensor
- Coolant sensor
- Fuel pump

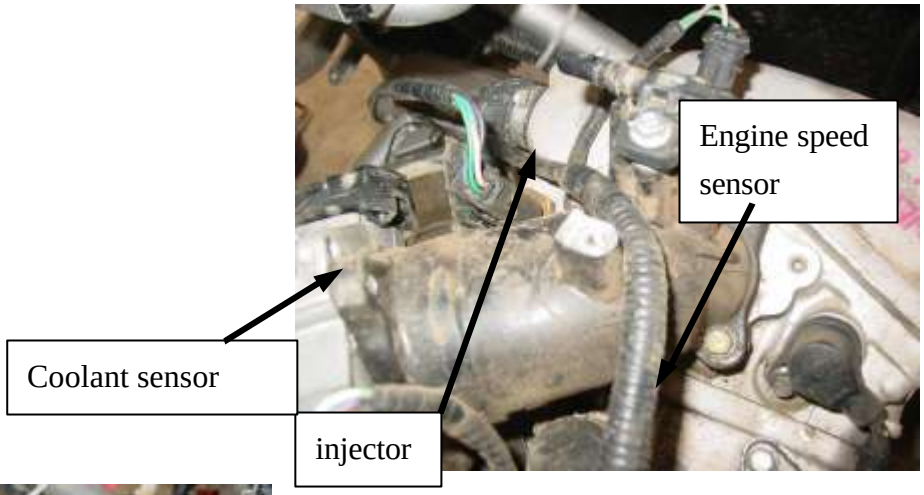

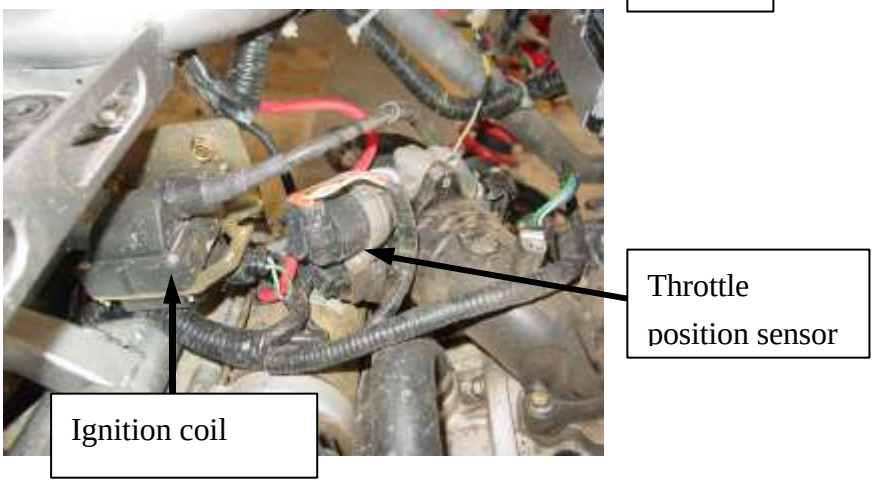

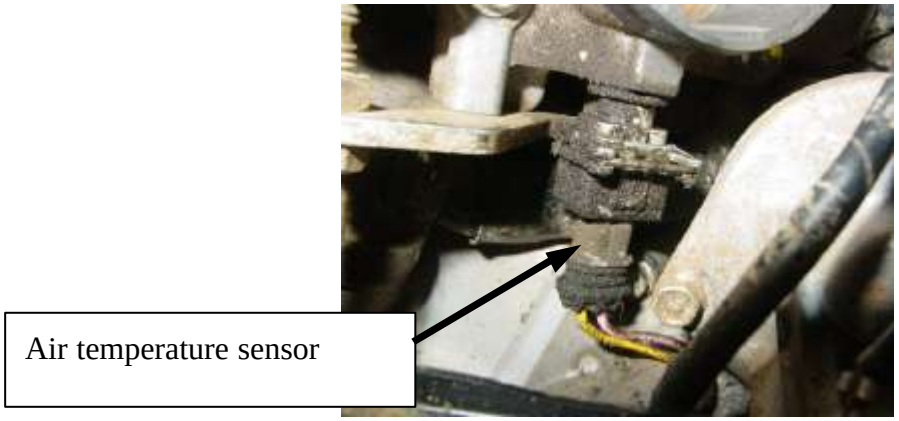

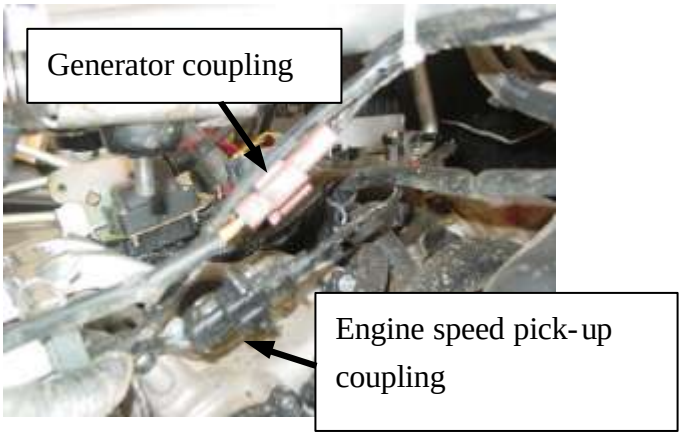

11.Brake sensor

Brake sensor conducts when brake oil pressure is enough !

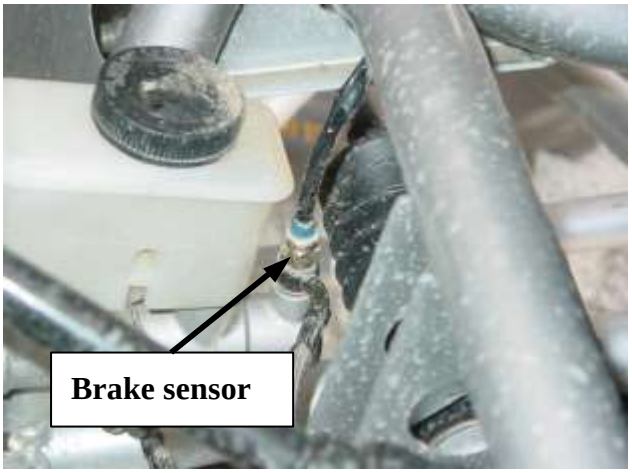

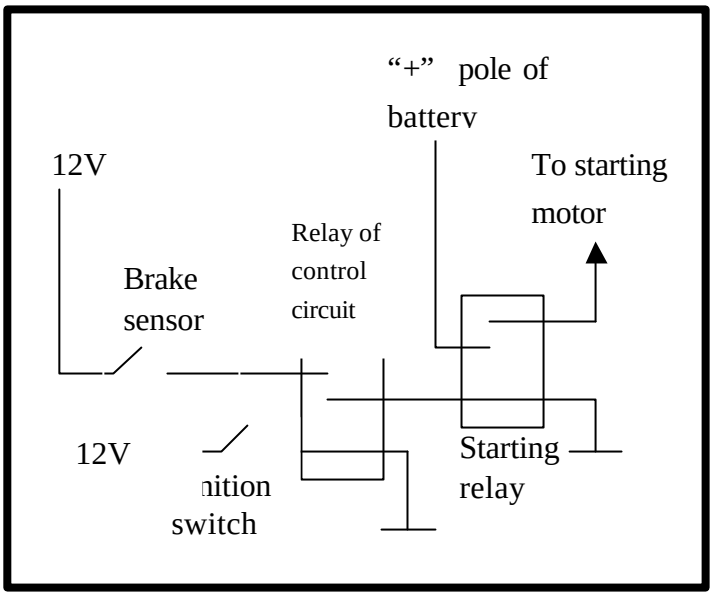

12.Cooling fan control

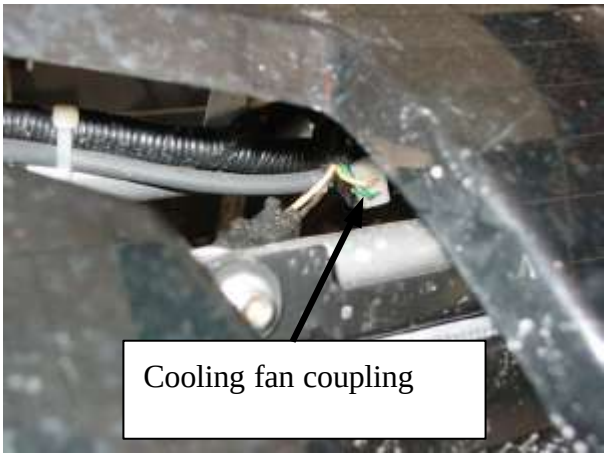

Cooling fan coupling locates above the radiator;
Cooling fan is controlled by ECU: 100℃ON；95℃OFF

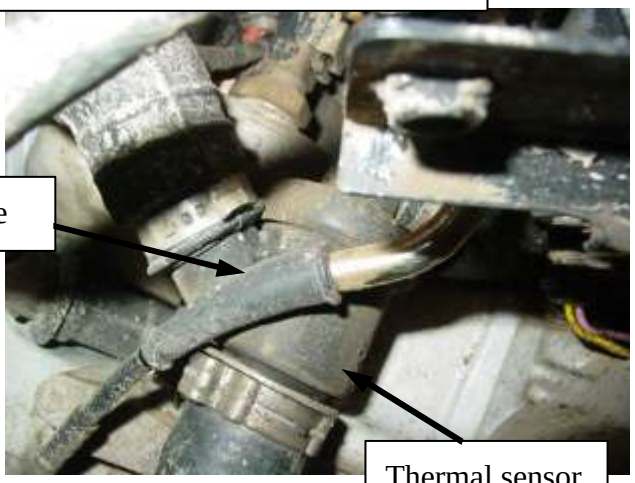

13.Starting control units

1.the battery is in "MF"(Maintenance Free) type, so it won't be necessary to check or refill the liquid. If the liquid is leaking, please contact with your dealer A.S.A.P.

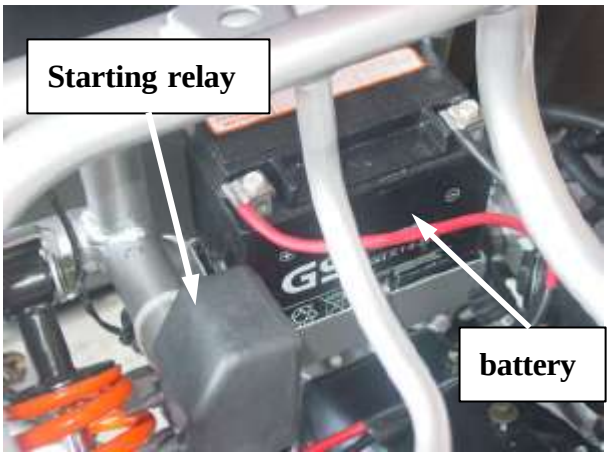

Attention: disconnect the battery wires when storage period is longer than 1 month!

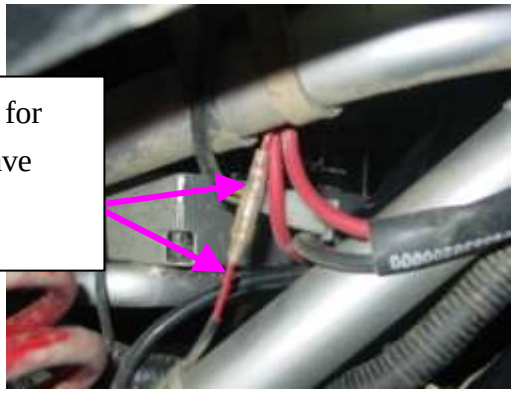

Disconnect the couple for long time storage to save battery power

2.Recharge

•Connection procedure:

connect the positive cable(+) of the negative cable(+) of the battery, and the negative cable(-) of the recharge to the negative cable(-) of the battery.

•Recharging currency:

Please recharge (12V) according to the following current and time.

Standard: 1.4A * 5~10Hr or Rapid: 14A *30min

NOTICE:
This battery is totally sealed. Do not remove seal bolt when recharging.

Notice:
•Keep away from fire when recharging.
•The "ON" or "OFF" of recharging. currency must be operated by the switch of recharge. It will cause spark or explosive if plug or unplug the cable directly.

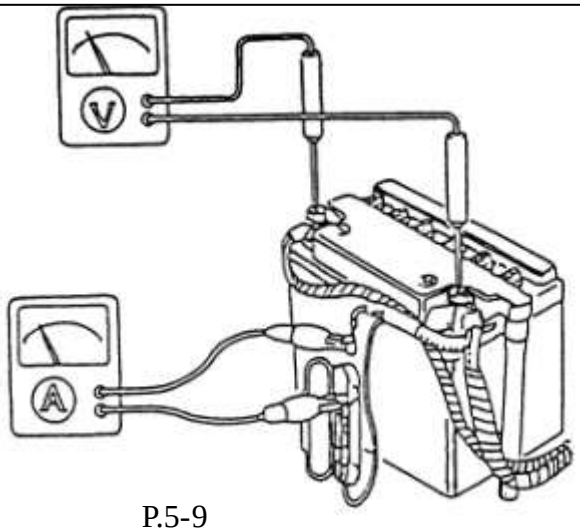

3.Testing the recharging performance

•This test needs to be done when the battery is fully recharged. •This test needs to be done after engine is warm-up.

a. Disconnect the couple of “fuse cable” .

b. Connect currency meter between red cable and battery, connect the positive cable(+) to the main wire-harness, and the negative cable(-) of the recharge to the positive cable(+) of the battery.

While testing, the red wire cable must not touch the frame.

c. Set the head lamp switch at “OFF”, engine revolution is at 2000 rpm while testing. Then increase the rpm slowly. (Assume the battery is fully charged. situation)

Head Lamp Switch	1,500rpm	3,000prm
OFF(DAY)	0.8A(MIN)	1.0A(MIN)
ON(NIGHT)	0.4A(MIN)	0.7A(MIN)

d. System layout:

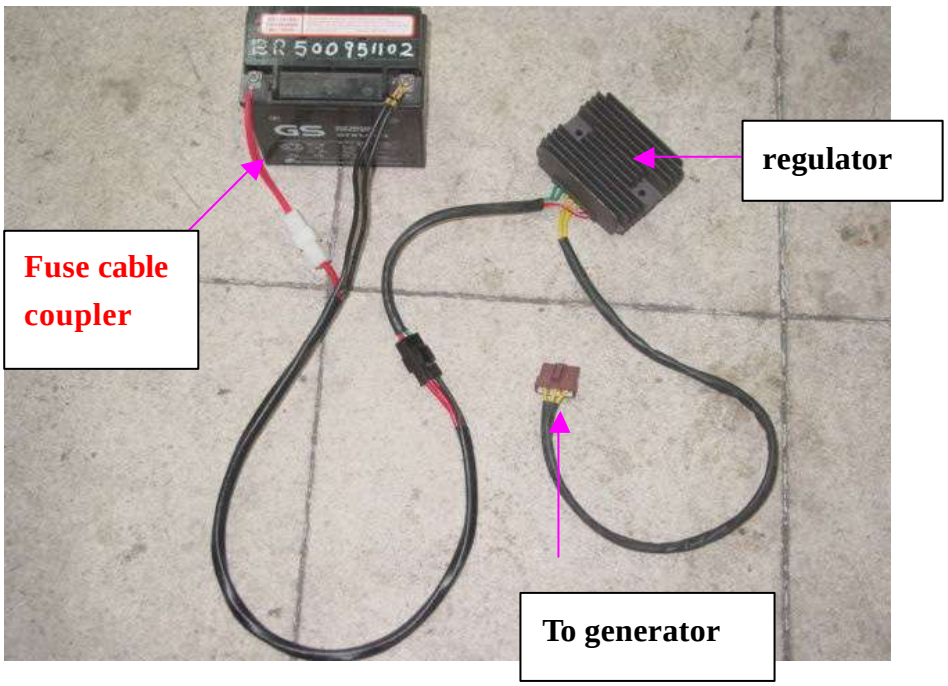

BATTERY CONSTRUCTION

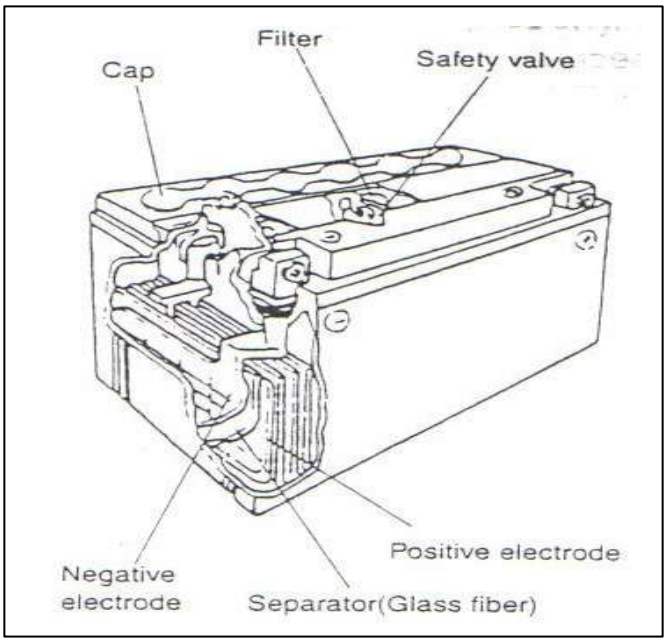

This Kart uses an MF (Maintenance Free) battery as shown in the right illustration, the battery consists of electrodes, separators, safety valve, filter, etc. Fine glass fiber is used for constructing the separator which holds electrolyte inside.

When a discharged conventional open type battery is recharged fully, lead sulfate turns to lead dioxide and sponge like lead. If recharging is further continued, charging current is consumed for electrolytic action producing oxygen gas from the positive and hydrogen gas from the negative electrodes. This causes electrolyte to be lost thereby requiring addition of water.

In an MF battery, however, no water loss is caused in this battery, the negative electrode is designed not to fully turn to lead (sponge-like lead) even under fully charged condition. For this reason, the negative electrode remains always in non-complete charged condition producing no hydrogen gas. Oxygen gasses produced at the positive electrode will immediately react With an active material (lead) at the negative electrode to turn back to water, thus preventing water from losing.

PRECAUTION WHEN HANDLING BATTERY ELECTROLYTE

- Take most care so as not to cause battery acid to contact a person and the vehicle.
- If battery acid has contacted the skin, clothes or vehicle, immediately flush with plenty of water. If battery acid remains contacted, burns of skin, damage to clothes, peeling or discoloration of paint will occur.
- Should battery acid gets in eyes, immediately flush with plenty of water and call physician.

ELECTROLYTE FILLING

! CAUTION

> Make sure to use electrolyte specified for each battery type.

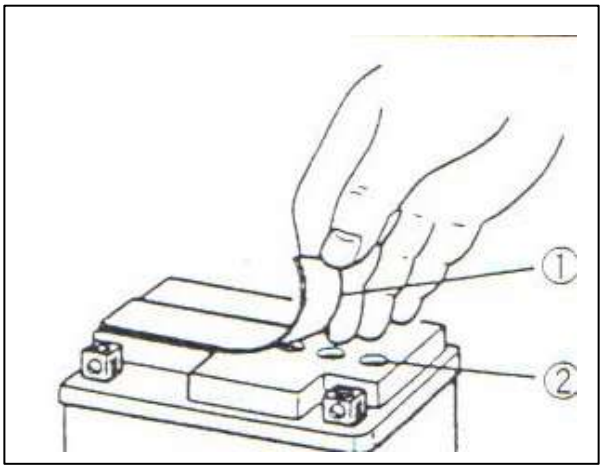

Using electrolyte designed for other battery type can cause Electrolyte leak, performance deterioration or shortened life.

- Remove the aluminum tape
  ① sealing the battery electrolyte filler holes
  ②.• Remove the cap
  ③ from the electrolyte container.

!CAUTION

> - Handle the removed cap carefully after filling electrolyte as the cap is reused for sealing the battery filler holes.
> - Do not remove or pierce the sealed areas ④ of the electrolyte container.

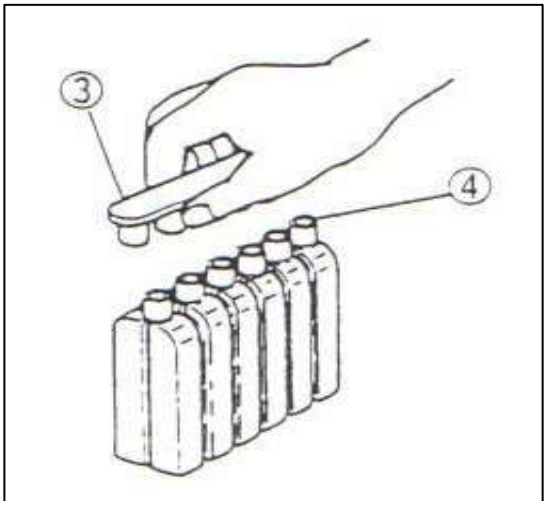

• Insert the nozzles of the electrolyte container into the battery's electrolyte filler holes, holding the container securely.

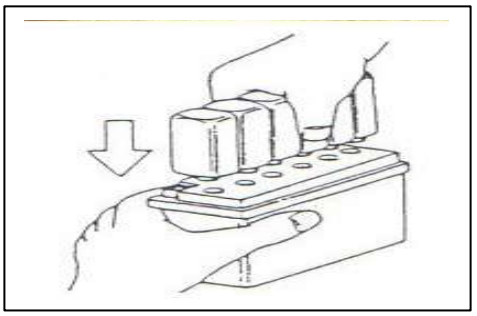

! CAUTION

• Take precaution not to allow any of the fluid to spill.
• Insert the nozzles squarely to the battery.

• Check that air bubbles are coming up from each electrolyte container and leave in this position for more than 20 minutes.

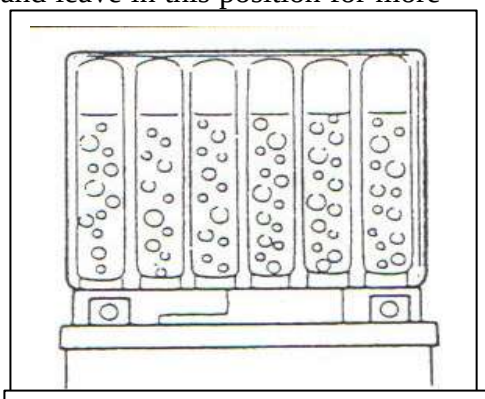

NOTE:

If no air bubbles are coming up from the filler port, tap the bottom of the container two or three times.
Never remove the container from the battery.

! CAUTION

Make sure to fill all the amount of electrolyte into the battery.

it is important to check all the cells are filled with electrolyte completely because insufficient filling of electrolyte in even one cell will result in deteriorated performance and shortened life.

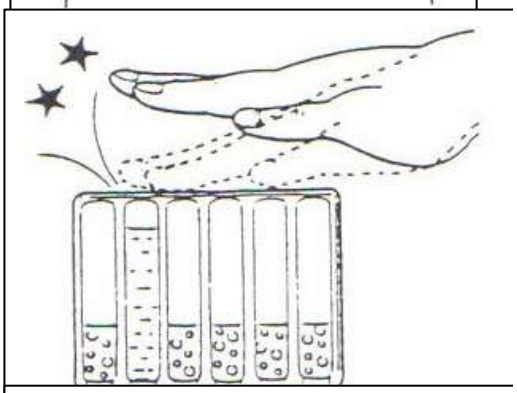

INSERTING CAP (SEALING PLUG)

! CAUTION

Fit the cap securely.

To install the cap, temporarily fit the cap to all the cells lightly, thereafter press the cap little by little into each filler hole evenly and horizontally.
Inserting the cap at once in one cell and then in the next Cell will cause the cap to deform resulting in poor sealing.

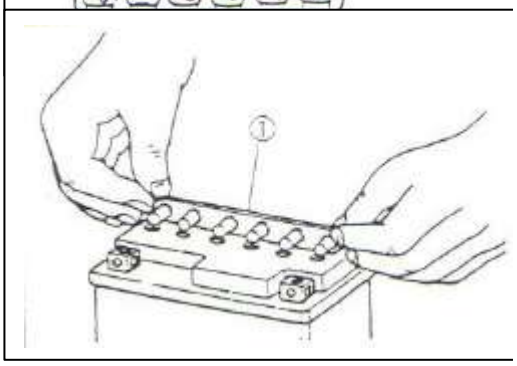

! CAUTION

• Wipe completely if the filler hole is wet with electrolyte.
• Do not remove the caps once it has been installed to the battery.

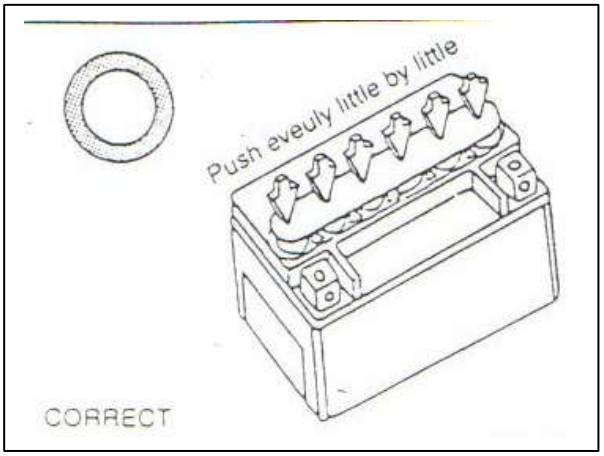

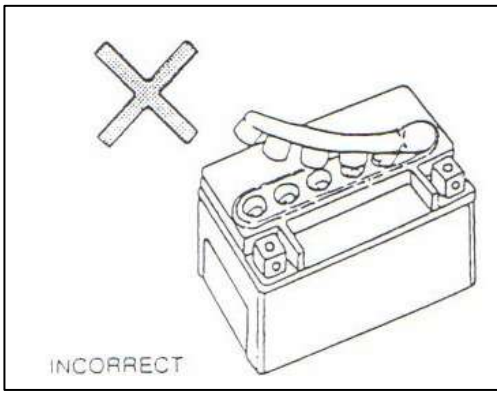

PRECAUTION FOR HANDLING BATTERY

The battery produces combustible gasses and therefore can explode if handled improperly. Use caution for the following in addition to general service precautions.

- Never allow the battery to short-circuit. Keep away from sparks and fire.
- Charging of the battery must be operated in an open and well ventilated area and never operate in an closed indoor.
- Using pocket tester, measure the battery terminal voltage. The tester should indicate more than 12.5~12.6V. If the battery voltage is lower than the specification, recharge the battery with a battery charger in accordance with the following instructions.

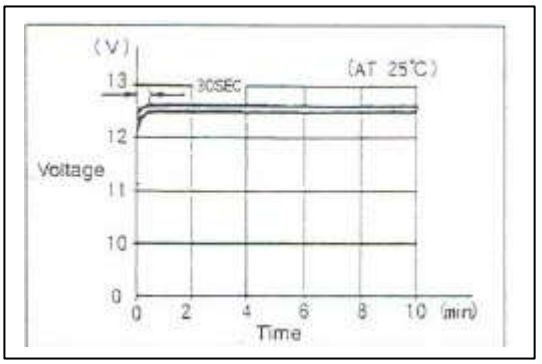

NOTE:

Initial charging of a new battery is recommended if two years or longer have elapsed since the date of manufacture.

RECHARGING

- Using the pocket tester, check the battery voltage. If the voltage reading is less than the 12.0V, recharge the battery with a battery charger.
- When recharging the battery, remove the battery from the motorcycle.
- Practice the standard charging unless otherwise necessary.

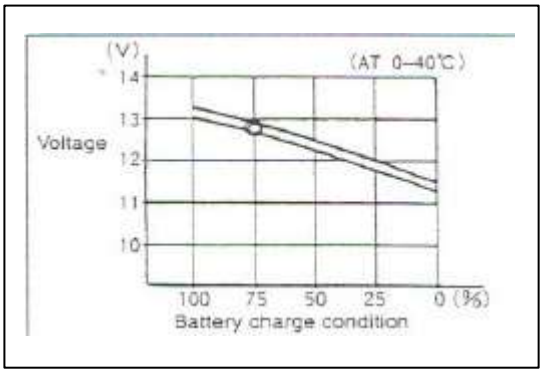

Recharging	
Standard	0.7A*5-10 hours
Quick	3A*1hour

- After recharging, wait for more than 30 minutes and check the battery voltage with a pocket tester.
- If the battery voltage is less than the 12.5V, recharge the battery again in the same condition. If battery voltage is still less than 12.5V after recharging, replace the battery with a new one.

NOTE:

When the motorcycle is not used for a long period, check the battery every 1 month to prevent the battery from deterioration.

! CAUTION

The charging system on this model is designed For MF battery and therefore do not use a battery of other specification.

BATTERY REMOVAL

1. Remove the battery fixing band, take off the cover.
2. Disconnect the battery Θ lead first.
3. Disconnect the battery ⊕ lead.
4. Remove the battery.

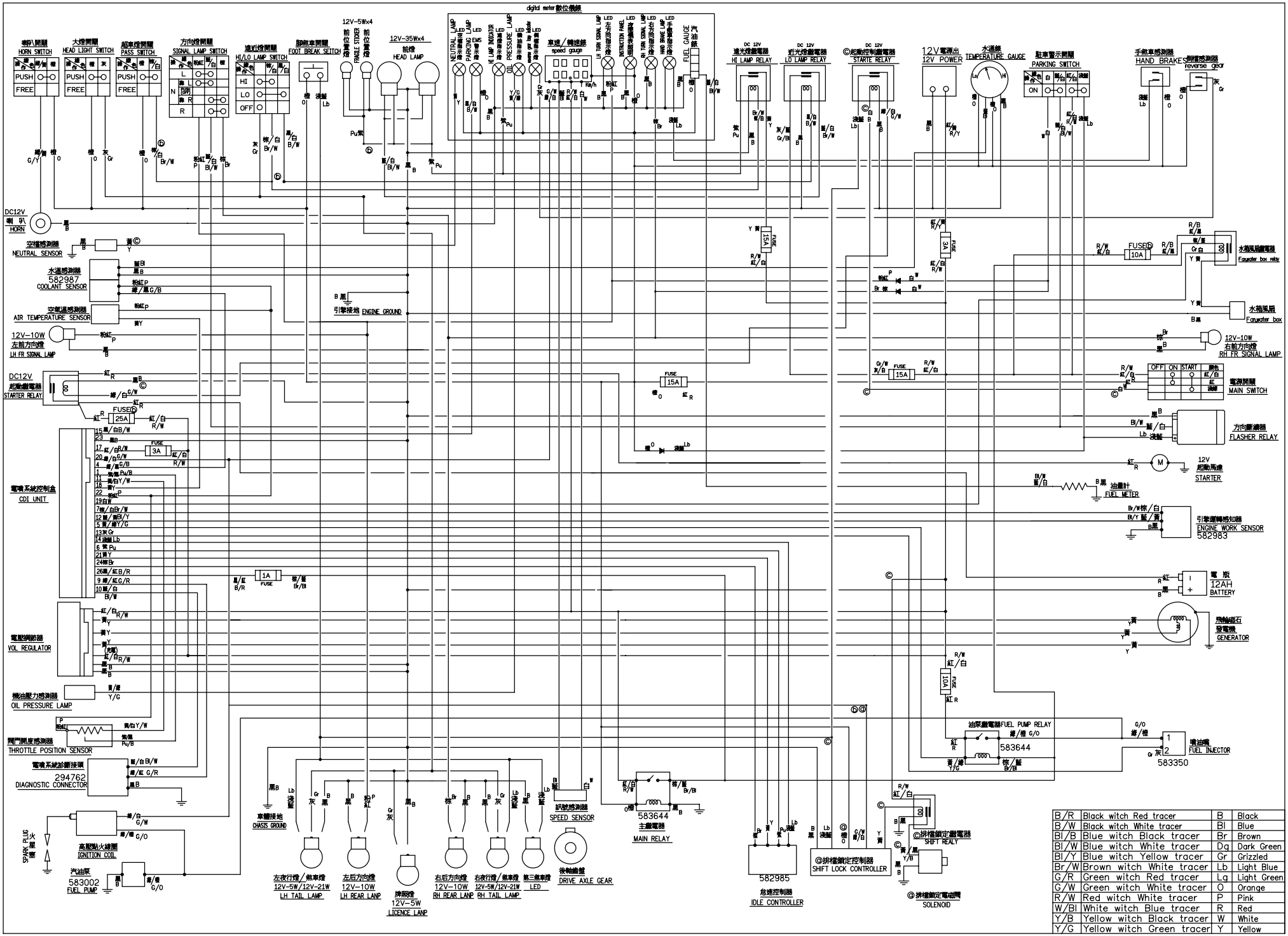
digital meter 數位儀錶
NEUTRAL LAMP
PARKING LAMP
HI LAMP INDICATOR
OIL PRESSURE LAMP
FUEL GAUGE
speed gauge
HORN SWITCH
HEAD LIGHT SWITCH
PASS SWITCH
SIGNAL LAMP SWITCH
HI/LO LAMP SWITCH
FOOT BREAK SEITCH
12V-5Wx4
FRAGLE STICKER
12V-35Wx4
HEAD LAMP
HI LAMP RELAY
LO LAMP RELAY
STARTE RELAY
12V POWER
TEMPERATURE GAUGE
PARKING SWITCH
HAND BRAKE
reverse gear
DC12V
HORN
NEUTRAL SENSOR
582987
COOLANT SENSOR
AIR TEMPERATURE SENSOR
12V-10W
左前方向燈
LH FR SIGNAL LAMP
引擎接地 ENGINE GROUND
水箱風扇繼電器
Fangwater box relay
水箱風扇
Fangwater box
12V-10W
右前方向燈
RH FR SIGNAL LAMP
電源開關
MAIN SWITCH
方向斷續器
FLASHER RELAY
12V
起動馬達
STARTER
油量計
FUEL METER
引擎運轉感知器
ENGINE WORK SENSOR
582983
電瓶
12AH
BATTERY
飛輪磁石
發電機
GENERATOR
噴油嘴
FUEL INJECTOR
583350
油泵繼電器FUEL PUMP RELAY
583644
583644
主繼電器
MAIN RELAY
582985
怠速控制器
IDLE CONTROLLER
排檔鎖定繼電器
SHIFT RELAY
排檔鎖定控制器
SHIFT LOCK CONTROLLER
排檔鎖定電磁閥
SOLENOID
車速感測器
SPEED SENSOR
後軸總盤
DRIVE AXLE GEAR
左夜行燈/煞車燈
12V-5W/12V-21W
LH TAIL LAMP
左后方向燈
12V-10W
LH REAR LANP
牌照燈
12V-5W
LICENCE LANP
右后方向燈
12V-10W
RH REAR LANP
右夜行燈/煞車燈
12V-5W/12V-21W
RH TAIL LAMP
第三煞車燈
LED
車體接地
CHASSIS GROUND
電噴系統控制盒
CDI UNIT
電壓調節器
VOL REGULATOR
機油壓力感測器
OIL PRESSURE LAMP
閥門開度感測器
THROTTLE POSITION SENSOR
電噴系統診斷接頭
294762
DIAGNOSTIC CONNECTOR
火星塞
SPARK PLUG
高壓點火線圈
IGNITION COIL
汽油泵
583002
FUEL PUMP
FUSE 15A
FUSE 25A
FUSE 3A
FUSE 1A
FUSE 10A
FUSE 15A
FUSE 3A
FUSE 10A
OFF ON START
B/R Black witch Red tracer
B/W Black witch White tracer
Bl/B Blue witch Black tracer
Bl/W Blue witch White tracer
Bl/Y Blue witch Yellow tracer
Br/W Brown witch White tracer
G/R Green witch Red tracer
G/W Green witch White tracer
R/W Red witch White tracer
W/Bl White witch Blue tracer
Y/B Yellow witch Black tracer
Y/G Yellow witch Green tracer
B Black
Bl Blue
Br Brown
Dg Dark Green
Gr Grizzled
Lb Light Blue
Lg Light Green
O Orange
P Pink
R Red
W White
Y Yellow

VEHICLE ENGINE 6

Engine removal

Warning - The following operations should be carried out on cold engine.

- Disconnect the battery, and drain the cooling fluid.
- Remove the rear rack.
- Remove the complete air cleaner assembly.
- Disconnect the electric devices and the starter motor power supply cable.
- Disconnect the fuel delivery and return pipes from the intake manifold, and cooling system piping(outlet from the head and the inlet to the thermostat).
- Disconnect the spark plug H.V. cable and the generator cables from the vehicle electric system.
- Take off the CV joints
- Loosen the bolts of rear muffler section, and dismantle muffler
- Loosen the bolts of engine with the engine hanger, loosen the bolts of reverse gear box with the bracket.
- Loosen the nut of engine with the engine hanger, take off the complete engine assembly.

Warning - Be very careful when handling fuel.

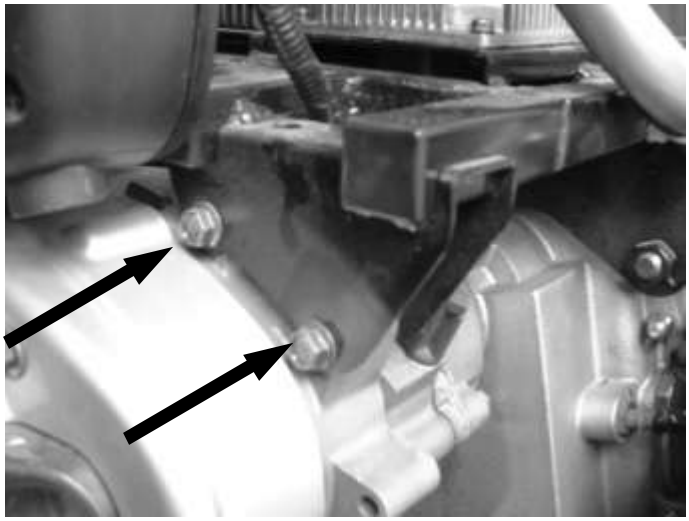

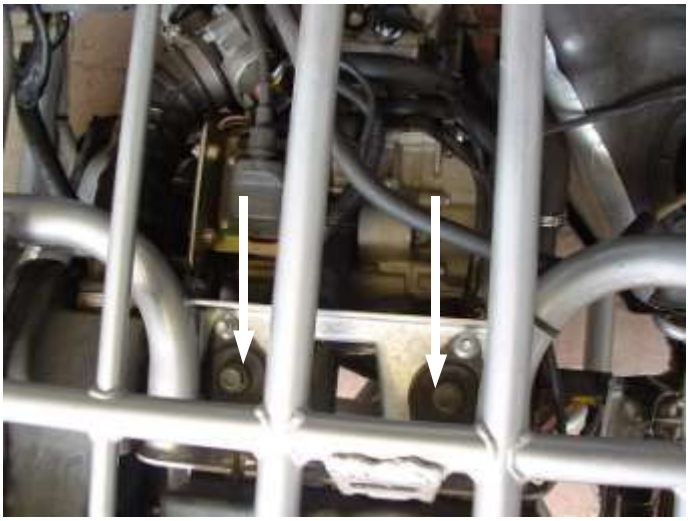

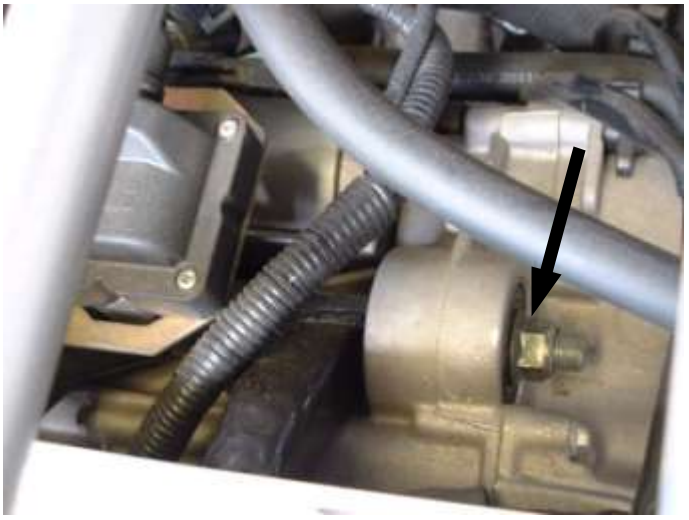

Vehicle Engine assembly

- Perform the operations for removal in the reverse order according to the tightening torques indicated in chapter “Characteristics””.
- Check the engine oil level and top up using the recommended brand, if required.
- Fill the cooling circuit.
- Check that accelerator and electric devices are in good working order.

Caution: Be very careful to ensure that the fuel control layout is in proper position.

INDEX OF TOPICS

STEERING WHEEL AND SUSPENSIONS	7

A. Front Wheel Replacement

Do not disassemble the castle nuts when you replace the front wheels.

It is only necessary to remove the 4 lug nuts to remove the wheel.

(See Figure)Tighten the nuts after replacing the wheels.

B. Rear Wheel Replacement

Do not disassemble the castle nuts when you replace the rear wheels.

It is only necessary to remove the 4 lug nuts to remove the wheel.

C. Front Wheel A1ignment

1. The front wheels should be “toe-in” from 1/8” to 1/4”. To check for alignment, measure distance A and B between the centerline (CL) of the wheels. The proper toe-in dimension A should be 1/8” – 1/4” greater than dimension B.
2. To adjust the alignments, loosen the lock nuts on both sides of Front Tie Rods. To make dimension B smaller, turn the rod to the left. Adjust the rod to right direction to make dimension B larger. After adjusting to the desired length, tighten the lock nut against the rod end.
3. Recheck the dimensions for proper alignment.

Right tie rod

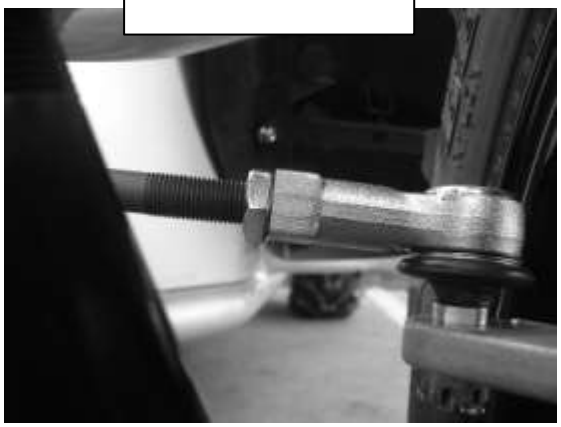

Left tie rod

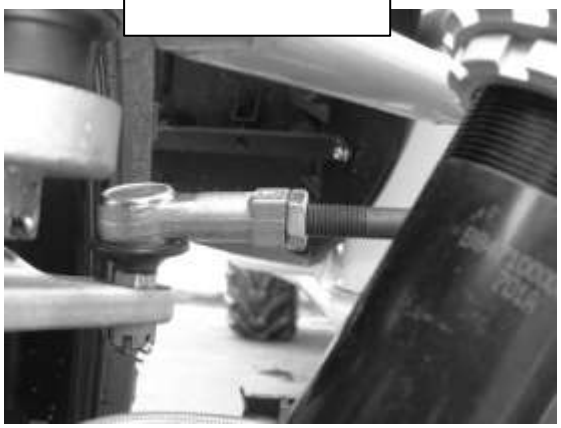

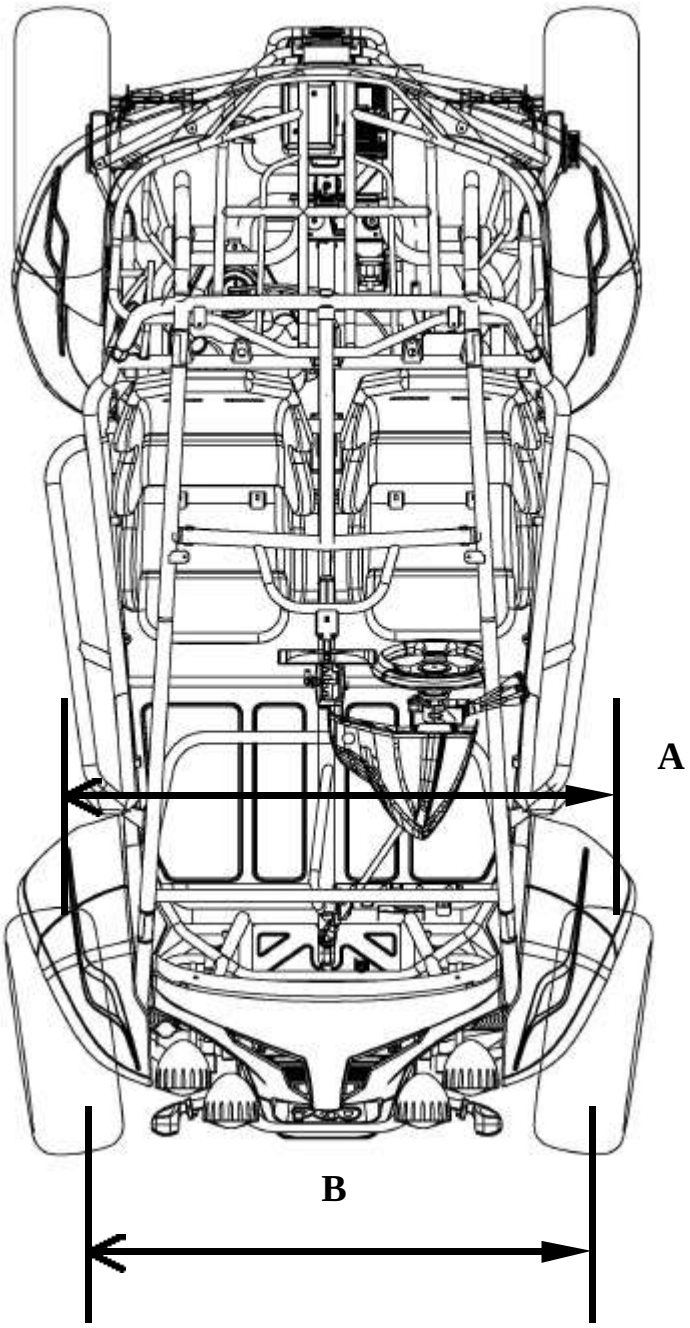

D. Rear swing arms

1. check the bolt and nut of rear swing arm, make sure they are well locked after usage.
   - The lock torque is 10~11 kg-m.
2. Check the clearance between spacer tube and automatic oiling bush, if clearance(each side) is bigger than 0.15mm, replace the bush.
3. Install the bush to the swing arm, apply some grease on the inner diameter of the bush before inserting the spacer tube.

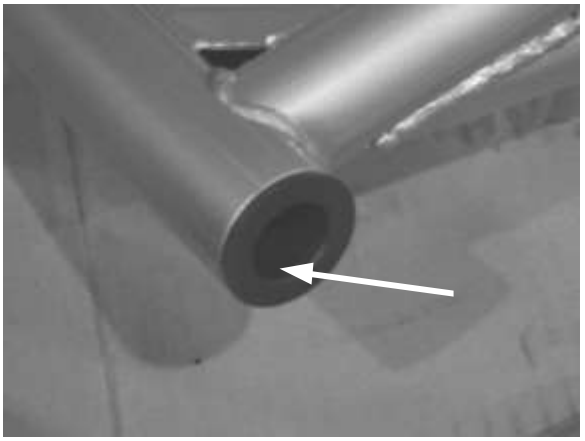

E. Front A arms

1. before install A arms to chassis, you have to lock the bolts of front absorber first.
   Lock torque: 4.0~5.0 kg-m
2. Then lock the bolts of A arms with:
   Lock torque: 4.0~4.5 kg-m
3. Check the bush, make sure there is no any crack occurs.
4. Check the clip of upper A-arm, don't miss it.

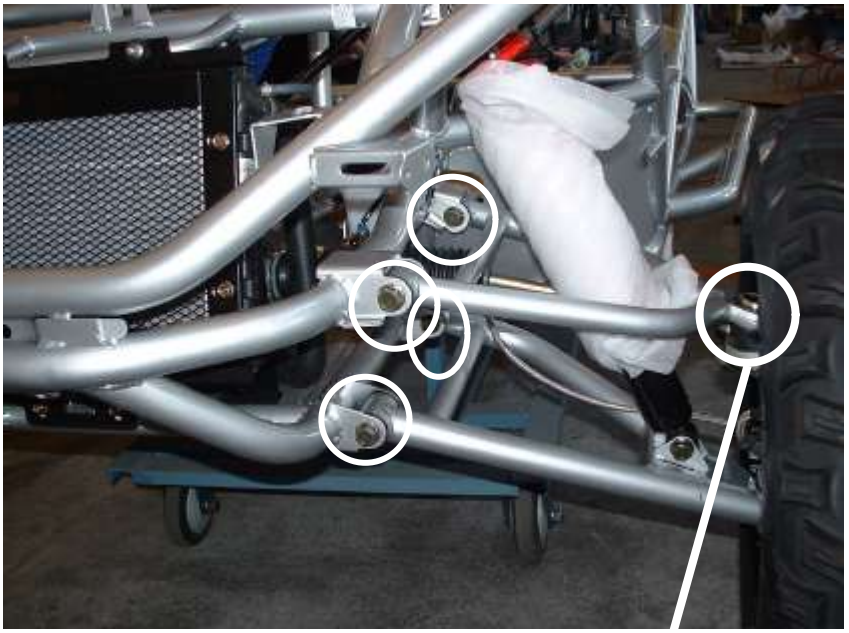

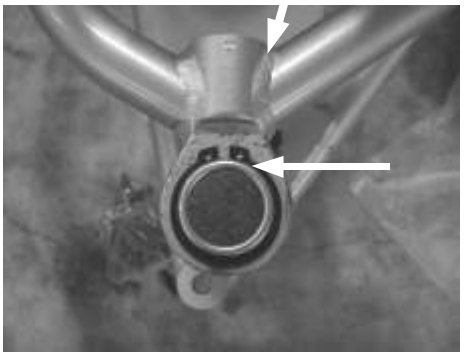

F. Steering mechanisms

1. the steering wheel control the vehicle moving direction, turn clockwise to right direction, and turn counterclockwise to left direction.
2. Check the rubber of turn mechanism assembly, if worn-out or grease leaking out, that will make you harder to operate turning.
3. Check the tie-rod of turn mechanism assembly, lock tight the cotter hexagon nut with:
   - Locking torque: 3.5~4.0 kg-m

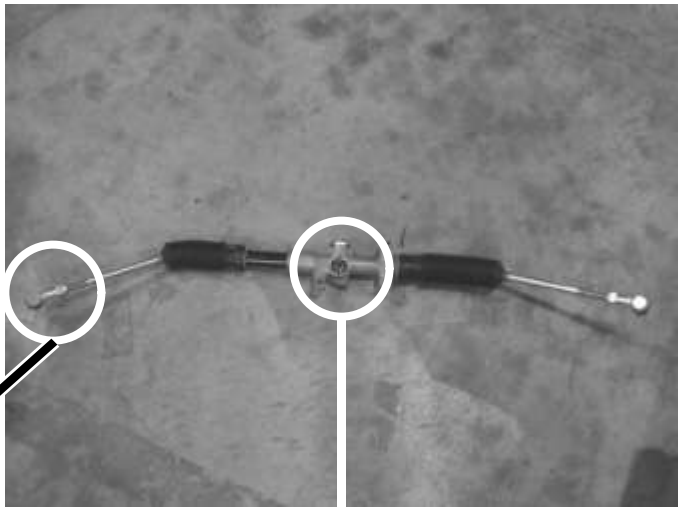

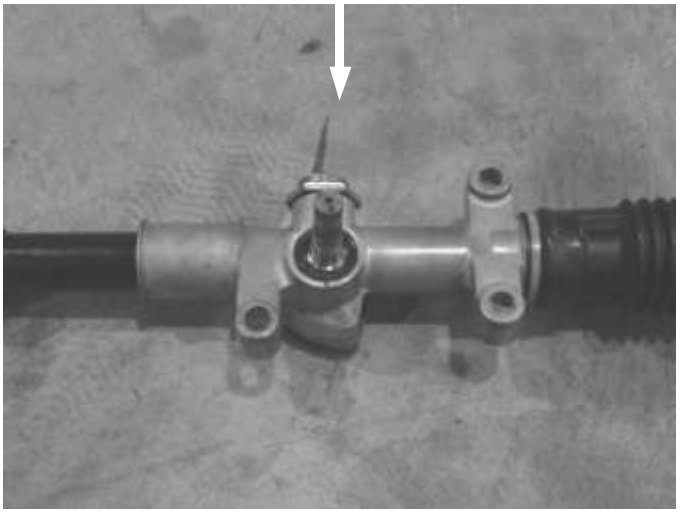

INDEX OF TOPICS

BRAKING SYSTEM	**8**

A. Brake fluid inspection

1. Check if the brake pedal can snap back or not.
2. Check the level of brake fluid tank. Fill it to upper level if it is under the lower level
3. Open the cap of brake fluid tank, fill it with brake fluid, and bleed air at front and rear calipers.
4. Push the pedal, and continue to bleed air, until there is no air inside the brake tube.
5. There is about 500 c.c. of brake fluid inside the whole brake circuit.

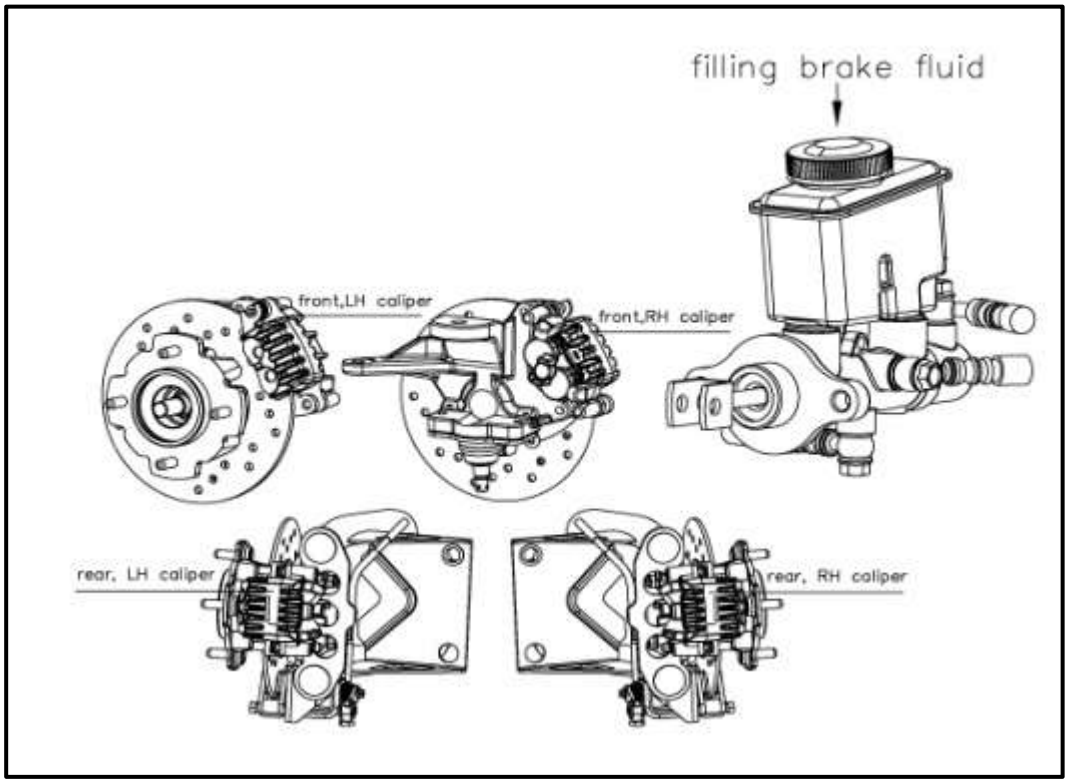

- **Brake hose**

  When install the brake hose, take care there are 1 washer in each side of the hose joint.

  Lock torque of the bolt: 2.0~3.0 kg-m

B. Front brake caliper & pads

- **Dismantle:**

1. Dismantle the front wheel & rim assembly.
2. Loosen the 2 bolts of caliper bracket with the steering shaft.
3. Loosen the 2 socket bolts of caliper' s pads.
4. Fix the bracket and body with pliers.
5. Withdraw the pads and yoke as figure shown.

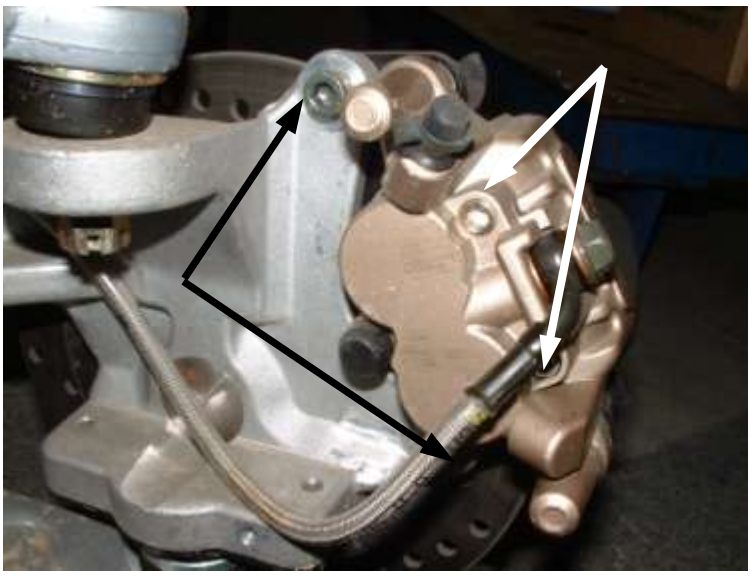

- **Inspect**

If the pads almost reach the grove bottom, or less than 1.5mm, you have to replace a new pairs.

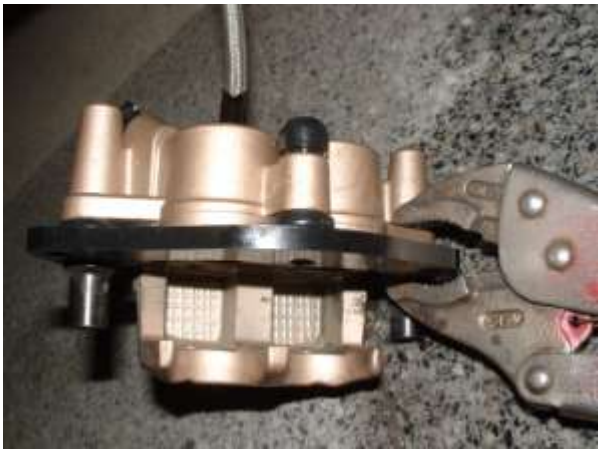

- **Install**

1. Be careful the big pad shall locate outside the lock pin of the yoke.
2. Reverse the dismantle procedure to install the pads.

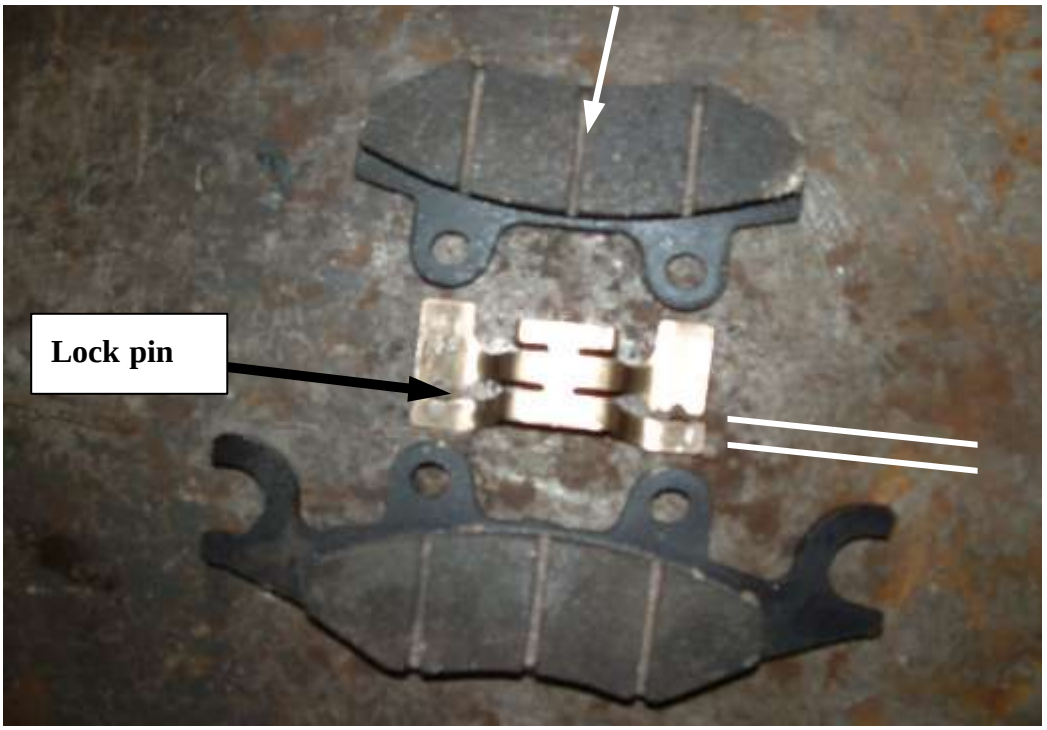

C. Rear brake caliper & pads

● Dismantle:

1. Dismantle the rear wheel & rim assembly.
2. Loosen the 4 nuts with the rear swing arm, dismantle the rear caliper & brake disk assembly.
3. Loosen the 2 bolts of caliper bracket with the rear brake hub.
4. Loosen the 2 socket bolts of caliper' s pads.
5. Press the bracket of caliper to the cylinder side.
6. Withdraw the brake pads.

● Inspect

If the pads almost reach the grove bottom, or less than 1.5mm, you have to replace a new pairs.

● Install

1. Reverse the dismantle procedure to install the pads.

D. Hand park caliper & pads

● Dismantle:

1. Dismantle the rear wheel & rim assembly.
2. Loosen the adjusting nut of hand brake cable.
3. Loosen the 2 bolts with the rear swing arm, withdraw the hand park caliper.
4. Punch the 2 lock pin(~6mm diameter) according to the figure shown direction.
5. Withdraw the pads.

● Inspect

If the pads almost reach the bottom, or less than 1.5mm, you have to replace a new pairs.

● Install

1. Reverse the dismantle procedure to install the pads.

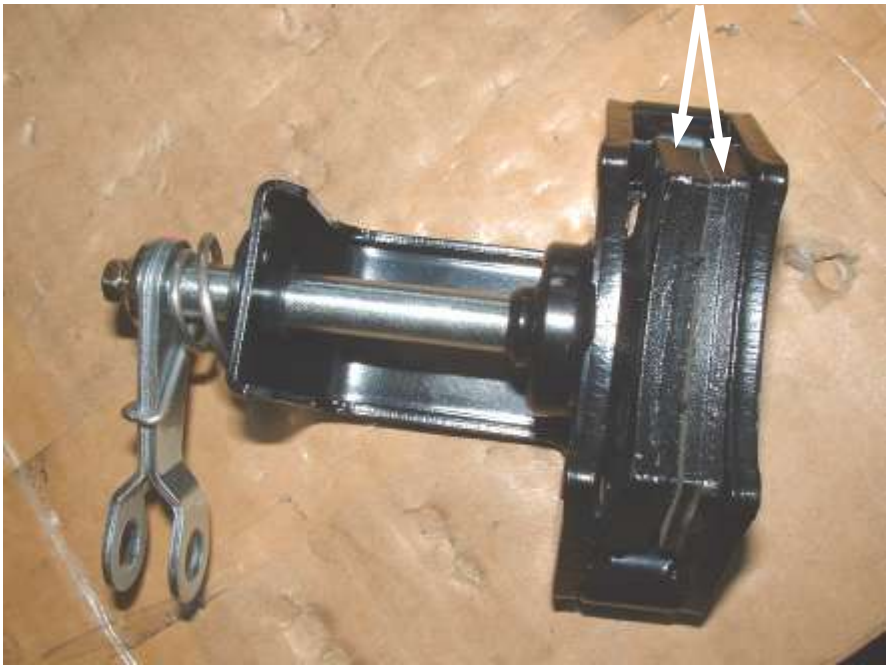

INDEX OF TOPICS

Introduction..... 9-2
Precautions 9-4
Troubleshooting 9-5
Immobilizer and EMS control terminals layout 9-6
EMS system layout..... 9-8
Troubleshooting procedures 9-9
Immobilizer system..... 9-17
Decoder and injection controller power supply circuit..... 9-29
Diagnostic tester connection circuit..... 9-33
Injection indicator circuit..... 9-34
Auto diagnostic system..... 9-37
Fuel feeding system..... 9-38
Revolution sensor..... 9-62
H.V. coil 9-65
Ignition timing 9-68
Cooling fluid temperature sensor..... 9-71
Sucked air temperature sensor..... 9-75
Pressure sensor..... 9-78
Gas valve position sensor(TPS)..... 9-79
Gas valve position signal reset(TPS reset) 9-82
Stepper motor..... 9-84
Electric fan control circuit..... 9-90

INJECTION **9**

1. Beforeproceeding to fixing the injection system, check the presence of any faults.
2. The feedingsystem is pressurised at 300 Kpa (3 BAR). Before disconnecting the quick unionof a pipe in the power supply system, check that there are no free flames, anddo not smoke. Be careful to prevent sprays in your eyes.
3. When fixingelectric components, leave the battery connected only if strictly necessary.
4. When carryingout functional checks, make sure that the battery voltage is more than 12V.
5. Beforeattempting start-up, make sure that the tank contains at least 2 litres offuel. Failure to observe this regulation can damage the fuel pump.
6. If thevehicle is expected to remain unused for a long time, refill the tank to morethan half the level. This ensures that the pump will remain immersed into thefuel.
7. When washingthe vehicle, do not insist on electric wiring and components.
8. If ignitionfaults are detected, start the checks from the injection system and batteryconnections.
9. Beforedisconnecting the EMS controller connector, perform the following operations inthe order shown:

-Set the switch to "OFF"
-Disconnect the battery
Failureto observe this rule can damage the controller.

10. Whenreplacing the battery, be careful not to reverse the polarity.
11. In order toprevent damages, disconnect and reconnect the EMS system connectors only ifactually required.

Beforereconnecting, check that the connections are perfectly dry.

12. When carrying out electric inspections, do not forcethe tester prods into the connectors. Do not perform measures not prescribed inthe manual.
13. At the end of every check carried out with thediagnostic tester, protect the system connector with the specific cap.
14. Beforereconnecting the quick unions of the power supply system, check that theterminals are perfectly clean.

EMSinjection system

The injection system is of the integratedinjection and ignition type.
Injection is indirect in the manifold throughelectronic injector.
Injection and ignition are timed on the 4-strokecycle by a wheel speed sensor pivoted on the camshaft control and a reluctancevariation sensor.
Carburetion and ignition are managed on thebasis of the engine rpm and the gas valve opening.?Further corrections are made according to the followingparameters:
- Cooling fluid temperature
- Sucked air temperature
- Ambient pressure

The system implements an idle feeding correctionwith cold engine through a stepper motor on a by-pass circuit of the gas valve.The controller manages the stepper motor and the injector opening time, therebyensuring the idle steadiness and the proper carburetion.
In all working conditions, carburetion ismanaged by changing the injector opening time.
The fuel feeding pressure is kept constant basedon the ambient pressure.
The **feedingcircuit** consists of:
- Fuel pump
- Fuel filter
- Injector
- Pressure regulator

Pump, filter and regulator are placed into thefuel tank by a single support.
The injector is connected by two pipes providedwith quick couplings. This allows obtaining a continuous circulation, therebyavoiding the risk of fuel boiling. The pressure regulator is located at the endof the circuit.
The fuel pump is controlled by the EMScontroller; this ensures the vehicle's safety.
The **ignitioncircuit** consists of:
- H.V. coil
- H.V. cable
- Screened cap
- EMS controller
- Spark plug

The EMS controller manages the ignition withoptimum advance, ensuring the timing on the 4-stroke cycle (ignition onlyduring compression).
The EMS injection-ignition system manages theengine operation by a preset program.
Should any input signals fail, an acceptableworking order of the engine is ensured to allow the user to reach a servicestation.
Of course, this cannot happen when therevolution-stroke signal is lacking, or when the failure concerns the control circuits:
- Fuel pump
- H.V. coil
- Injector

The controller is provided with an auto-diagnosis system connected to an indicator in the instrument panel.

Failures are detected and restored by the diagnostic tester dwg. 020460Y.
In any case, when the fault has been fixed the stored value is automatically deleted after 16 usage cycles (cold start, running in temperature, stop).
The diagnostic tester is also

.

Failures are detected and restored by the diagnostic tester dwg. 020460Y.
In any case, when the fault has been fixed the stored value is automatically deleted after 16 usage cycles (cold start, running in temperature, stop).
The diagnostic tester is also

required for adjusting the idle carburetion.

1 - A failure of the EMS system may depend on theconnections rather than on the components.
Before searching the EMS system for failures,perform the following checks:

1. Power supply	- Battery voltage - Burnt fuse - Remote control switches - Connectors
2. Chassis earth	
3. Fuel feeding	- Faulty fuel pump - Dirty fuel filter
4. Ignition system	- Faulty spark plug - Faulty coil - Faulty screened cap
5. Intake circuit	- Dirty air filter - Dirty by-pass circuit - Faulty stepper motor
6. Other	- Wrong timing - Wrong idle carburetion - Wrong reset of the gas valve position sensor

2 -Failures to the EMS system may depend on loosenedconnectors. Make sure that all connections are properly implemented.
Check the connectors being careful of thefollowing: 1 check that terminals are not bent.
check that connectors are properly engaged.
check whether the failure changes if theconnector is slightly vibrated.

3 -Before replacing the EMS controller, check thewhole system carefully.
If the fault is fixed by replacing the EMScontroller, install the original controller again and check whether the faultoccurs again.

4 -For troubleshooting, use a multimeter with aninternal resistance of more than 10K(ohm)/V.
Improper instruments may damage the EMScontroller.
The instruments to be preferred have adefinition of more than 0.1V and 0.5Ω and an accuracy of more than ?2%.

.

Layout of the system-side connector and of the connector on controller.

CONTROLLER SIDE	SYSTEM SIDE

EMS CONTROLLER

N.	FUNCTION	N.	FUNCTION
1	THROTTLE POTENTIOMETER POWER SUPPLY (+5V)	14	STEPPER MOTOR
2	-	15	INSTRUMENT UNIT (INJECTION INDICATOR ?NEGATIVE)
3	-	16	DECODER (SERIAL)
4	ENGINE TEMPERATURE (+)	17	BASE POWER SUPPLY (POSITIVE)
5	86 ELECTRIC FAN REMOTE CONTROL SWITCH	18	AIR TEMPERATURE SENSOR (+)
6	STEPPER MOTOR	19	85 REMOTE CONTROL SWITCH (PUMP - INJECTOR - H.V. COIL) (-)
7	ENGINE RPM SENSOR	20	H.V. COIL (NEGATIVE CONTROL)
8	-	21	STEPPER MOTOR
9	EMS DIAGNOSTIC CONNECTOR	22	SENSOR POWER SUPPLY (-)
10	EMS DIAGNOSTIC CONNECTOR	23	CONTROLLER NEGATIVE
11	THROTTLE POTENTIOMETER SIGNAL	24	STEPPER MOTOR
12	ENGINE RPM SENSOR	25	-
13	INJECTOR CONTROL (NEGATIVE)	26	UNDER-PANEL POWER SUPPLY (POSITIV

DECODER

N.	FUNCTION
1	-
2	IMMOBILIZER LED CONTROL (NEGATIVE)
3	BASE POWER SUPPLY

	(POSITIVE)	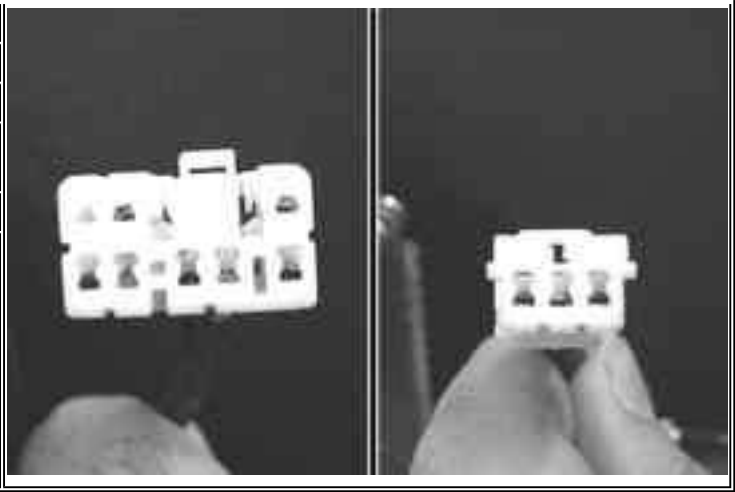
4	NEGATIVE	
5	-	
6	EMS CONTROLLER (SERIAL)	
7	-	
8	UNDER-PANEL POWER SUPPLY (POSITIVE) IMMOBILIZER ANTENNA IMMOBILIZER ANTENNA	

1) Electric fan remote control switch
2) Electric fan
3) Controller remote control switch
4)H.V. coil
5)Fuel pump
6) Instrument unit
7) Injector
8) Fluid temperature sensor
9) Air temperature sensor
10) Throttle potentiometer
11) Stepper motor
12) EMS controller
13) Immobilizer antenna
14) Decoder
15) EMS diagnostic socket
16) Stroke revolution sensor
17) Stand switch
18) Emergency switch
19) Diode 2A
20) Fuse 3A
21) Engine stop remote control switch
22) Master remote control switch
23) Key switch
24) Rectifier regulator
25) Fuse 10A
26) Fuse 30A
27) Fuse 5A
28) Utilities

Perform the following checks:

Fault type	Checks to perform
Immobilizer signal	System not coded Inefficient system, fix according to the auto-diagnosis instructions
Failures detected by the auto-diagnosis of the injection	circuit check H.V. coil Injector Stroke revolution sensor
Fuel feeding	Fuel in the tank Activation of the fuel pump Fuel pressure (low) Injector capacity (low)
Spark plug power supply	H.V. coil screened cap spark plug (secondary insulation)
Compression end pressure	
Parameter reliability	Cooling fluid temperature Injection ignition timing Sucked air temperature

Perform the following checks:

Fault type	Checks to perform
Failures detected by the auto-diagnosis of the injection	Pump relay H.V. coil Injector Stroke revolution sensor Air temperature Cooling fluid temperature Atmospheric pressure
Start-up	Starter motor and remote control switch Battery Earth connections
Compression end pressure	
Spark plug power supply	Spark plug Screened cap H.V. coil Stroke revolution sensor Ignition advance
Fuel feeding	Fuel pressure (low) Injector capacity (low) Injector seal (poor)
Parameter correctness	Cooling fluid temperature Sucked air temperature Gas valve position Stepper (effective steps and opening) Cleaning of the auxiliary air duct and of the gas valve Air filter efficiency

Perform the following checks:

Fault type	Checks to perform
Failures detected by the auto-diagnosis of the injection	Pump relay H.V. coil Injector Stroke revolution sensor Air temperature Cooling fluid temperature Atmospheric pressure
Ignition efficiency	Spark plug Ignition timing
Parameter correctness	Gas valve position sensor Stepper Cooling fluid temperature sensor Sucked air temperature sensor
Intake system cleaning	Air filter Gas valve and choke Stepper and additional air duct
Intake system seal (infiltrations)	Intake manifold - head Throttle body - manifold Intake manifold Filter box
Fuel feeding (low pressure)	Fuel pump Pressure regulator Fuel filter Injector capacity
Exhaust gas analysis before catalytic converter	Trimmer value adjustment (CO% adjustment)

Perform the following checks:

Fault type	Checks to perform
Failures detected by the auto-diagnosis of the injection	Pump relay H.V. coil Injector Stroke revolution sensor Air temperature Cooling fluid temperature Atmospheric pressure
Ignition efficiency	Ignition timing
Parameter correctness	Gas valve position sensor Stepper Cooling fluid temperature sensor Sucked air temperature sensor
Intake system seal (infiltrations)	Intake manifold - head Throttle body - manifold Intake manifold Filter box
Fuel feeding (low pressure)	Fuel pump Pressure regulator Fuel filter Injector capacity
Exhaust gas analysis before catalytic converter	Trimmer value adjustment (CO% adjustment)

Perform the following checks:

Fault type	Checks to perform
Failures detected by the auto-diagnosis of the injection	Pump relay H.V. coil Injector Stroke revolution sensor Air temperature Cooling fluid temperature Atmospheric pressure
Parameter correctness	Gas valve position sensor Stepper Cooling fluid temperature sensor Sucked air temperature sensor
Intake system seal (infiltrations)	Intake manifold - head Throttle body - manifold Intake manifold Filter box
Fuel feeding (low pressure)	Fuel pump Pressure regulator Fuel filter Injector capacity
Exhaust system seal (infiltrations)	Manifold - head Manifold - silencer Analyzer socket Silencer welding
Exhaust gas analysis before catalytic converter	Trimmer value adjustment (CO% adjustment)

.

Perform the following checks:

Fault type	Checks to perform
Failures detected by the auto-diagnosis of the injection	Pump relay H.V. coil Injector Stroke revolution sensor Air temperature Cooling fluid temperature Atmospheric pressure
Intake system cleaning	Air filter Gas valve and choke Stepper and additional air duct
Intake system cleaning	Intake manifold Filter box
Ignition system	Spark plug wear check
Parameter reliability	Gas valve position signal Cooling fluid temperature signal Sucked air temperature signal Ignition advance
TPS reset performed successfully	
Exhaust gas analysis collected before the catalytic converter	Trimmer value adjustment (CO% adjustment)

Perform the following checks:

Fault type	Checks to perform
Failures detected by the auto-diagnosis of the injection	Pump relay H.V. coil Injector Stroke revolution sensor Air temperature Cooling fluid temperature Atmospheric pressure
Spark plug power supply	Spark plug Screened cap H.V. cable H.V. coil
Intake system	Air filter Filter box (seal) Intake manifold (seal)
Parameter reliability	Gas valve position signal Cooling fluid temperature signal Sucked air temperature signal Ignition advance
Fuel feeding	Fuel level in the tank Fuel pressure Fuel filter Injector capacity

Perform the following checks:

Fault type	Checks to perform
Failures detected by the auto-diagnosis of the injection	Pump relay H.V. coil Injector Stroke revolution sensor Air temperature Cooling fluid temperature Atmospheric pressure
Ignition efficiency	Spark plug
Parameter reliability	Gas valve position signal Cooling fluid temperature signal Sucked air temperature signal Ignition advance
Intake system cleaning	Intake manifold Filter box
TPS reset performed successfully	
Fuel feeding	Fuel pressure Fuel filter Injector capacity Fuel quality
Selection of the cylinder base gasket thickness	

The EMS system is integrated with the immobilizer anti-theft device. Its functions are: - Start-up enabled by key recognition. - Deterrent flashing.	

The system consists of:
- EMS system controller
- decoder
- antenna
- master key (red-coloured)
- service key (black-coloured)
- Dissuader and diagnostics led

1	GENERAL FUSE 30A	**10**	DIODE 2?/span>
2	FUSE 7.5A	**11**	VEHICLE SYSTEM CONNECTOR ? INJECTION SYSTEM
3	FUSE 3A	**12**	INSTRUMENT UNIT
4	FUSE 5A	**13**	IMMOBILIZER LED
5	STAND SWITCH	**14**	DECODER
6	EMERGENCY SWITCH	**15**	IMMOBILIZER ANTENNA
7	KEY SWITCH	**16**	ECU CONTROLLER
8	ENGINE STOP REMOTE CONTROL SWITCH		
9	MAIN REMOTE CONTROL SWITCH		

When controller (ECU) and decoder are notprogrammed, the following conditions occur:
- Key switch set to "OFF". Deterrentflashing inactive.
- Key switch set to "ON". Ignition andinjection disabled and led on with solid light.

When the key switch is set to "ON", the led switches on as shown in the figure. The led is turned on by the decoder. The controller data can be checked by the diagnostic tester dwg. 020460Y.	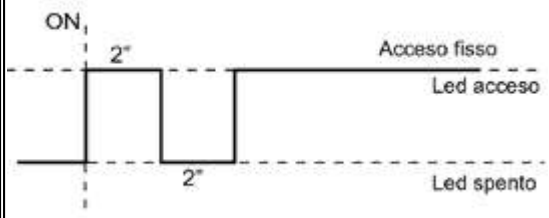
To connect the diagnostic tester, open the spark plug inspection port and pull out the EMS diagnostic socket. Remove the protection cap and connect the tester terminal.	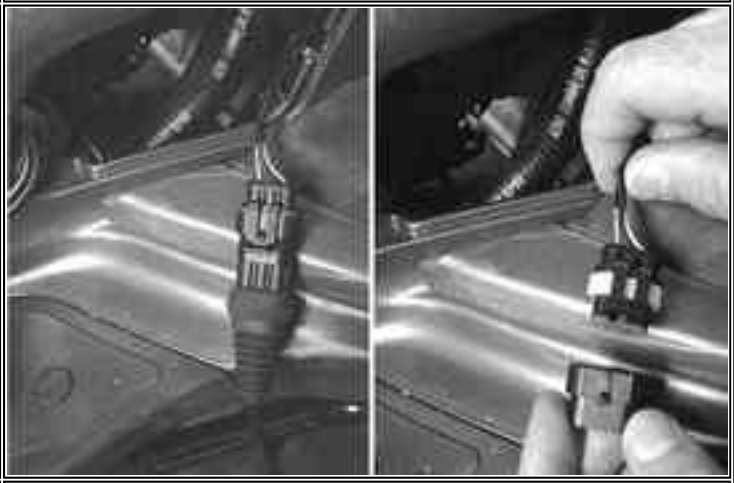
Power the diagnostic tester by connecting the terminals to the battery poles, or the specific connector to the socket inside the gloves compartment.	
Set the switch to "ON" and select the diagnostic tester menu to the immobilizer function. Scroll the pages to display the controller data.	

NOTE:A blank system cannot be detected upon first assembly, or in case of concurrentreplacement of decoder and controller.

The information will be as follows:

Blank controller ON
Start-up disabled ON
Number of keys Zero > 250

System programming:

The vehicle is supplied with two keys:
- Master key (red-coloured) with removabletransponder
- Service key (black-coloured) with fixedtransponder

The master and service keys musty be used tocode the system as follows:
- Insert the master key, set to "ON"and keep this position for 2 seconds (limit values 1? seconds).
- Insert the black key and set to "ON"for 2 seconds.
- If you have keys in two copies, repeat theoperation for each key,
- Insert the master key again and set to"ON" for 2 seconds.

The maximum time to change keys is of 10seconds.
Seven service keys (black coloured) can beprogrammed within the same storage operation.
Times and procedure must be strictly observed,or it will be necessary to repeat from the beginning.
Once the system has been programmed, master keytransponder, decoder and controller are strictly matched.
This matching allows performing further servicekey programming in case of loss, replacement, etc.
Every programming deletes the previous one; toadd or delete a key it is therefore necessary to repeat the procedure using allkeys that you want to keep in use.
NOTE: An accidental loss of the service key programmingcan arise from general faults of the ignition system. In this case, check theH.V. line shielding.
In any case it is advisable to use resistivespark plugs.

When the key switch is set to "ON" and programming is performed normally, the led switches on as shown in the figure. WITH MASTER KEY After the confirmation flash when switching to "ON", a number of flashes are emitted, equal to the number of keys used for programming.	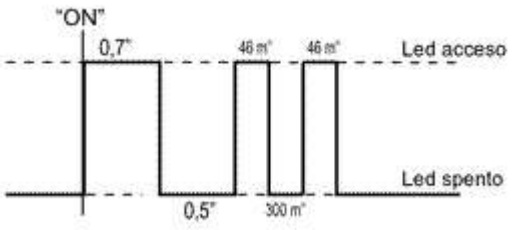
WITH SERVICE KEYS	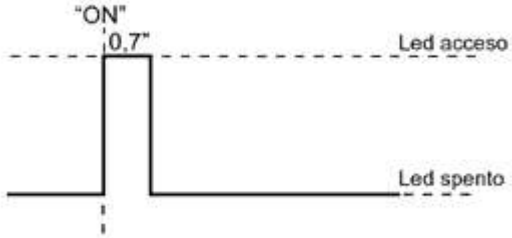

Switching from "ON" to "OFF" with programmed system causes the intermittent switching on of the led, with an anti-theft effect. This occurs with any key used for programming.	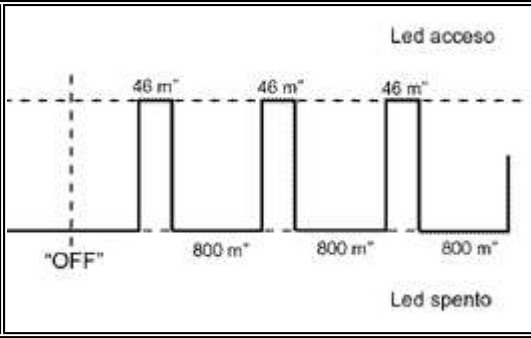

If the vehicle is not used, the deterrent lightstops automatically after 48 hours to prevent discharging the battery. A new48-h cycle starts by switching from "OFF" to "ON" and"OFF" again.

Connect the diagnostic tester dwg. 020460Y. Set to 0N, and select the immobilizer function. Scroll the pages the find the data.	

The information will be as follows:
- Blank controller OFF
- Start-up disabled OFF
- Number of keys 2*

*The number denotes how many keys have been usedfor programming, master key included.

1Replacing the small cylinder

- Remove the original master key transponder andinstall it on the master key of the new cylinder.
- Program the system again as described above.

2Decoder replacement

When the decoder is replaced it is necessary toprogram the system again.
Programming is indispensable for the enginestart-up. (see System programming).

3Controller replacement

Programming is indispensable when the controlleris replaced to enable the engine start-up.
In this case it is sufficient to switch to"ON" using the master key.

NOTE:

- The service key (black-coloured) is not usedfor programming.
- When not programmed, the controller allows nofunctional diagnosis on the engine.

4Replacing or duplicating service keys

Keys can be duplicated using the preforms andthe original master key.
A copy may also be requested using the vehicle'sCODE CARD.
Program the system again using the master keyand all service keys (see System programming).

NOTE:

The CODE CARD can only be used when the originalMASTER key is available.

The led indication is divided into 3 steps:
1st step: A flash: "ON" switchingrecognition
2nd step: Series of flashes: diagnostic codeindication
3rd step: Solid light on or off: on = start-up disabled off = start-up enabled

Code 1 indicates a non-programmed system. If the code is still displayed after having carried out the programming procedure, repeat the procedure carefully observing the "ON" times of each key.	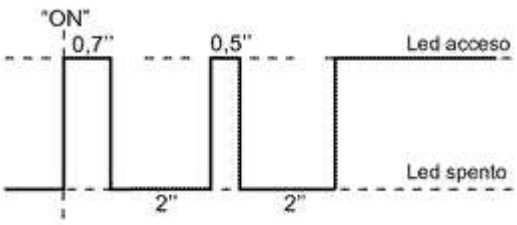

If the code is still displayed, proceed asfollows:
- Disconnect the battery negative.
- Remove the controller connector.
- Connect the specific tool dwg. 020481Y betweenthe injection system and the controller.
- Remove the main decoder connector.

NOTE: To access the components, see the components layout chapter.

1 ?Using a multimeter, check the continuity between pin 16 of the controller and pin 6 of the decoder connector. YES go to 3 NO go to 2	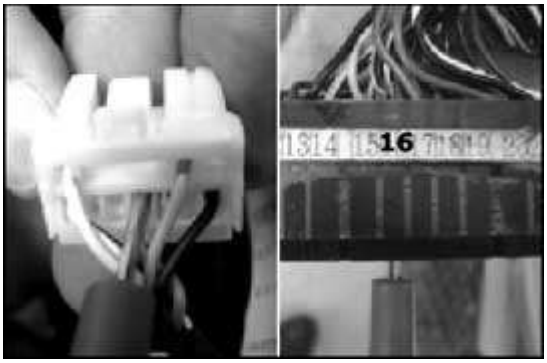
2 ?Replace or fix the wiring.	
3 ?Check the connections carefully YES go to 5 NO go to 4	
4 - Restore	
5 ?Replace the decoder. Connect the battery. Repeat the programming. YES go to 7 ?/span>NO go to 6	
6 ?Disconnect the battery, replace the controller, connect the battery. Repeat the programming.	
7 - The system is OK.	

Code no. 2 denotes a system where the decoder does not perceive the transponder's signal. - Start-up disabled - Injection light on, solid In this case, proceed as follows:	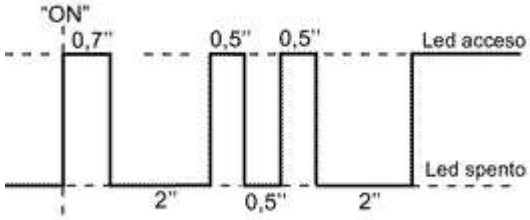

1- Check whether the code is repeated using the second key.
YES go to 3 ?/span>NO go to 2

2 ?Failure detected with the service key Replace and program again. Failure detected with the master key.
Replace the transponder using one from the new cylinder kit.
Replace decoder and controller.
Program again.

3 ?Check the proper connection of the antenna connector. YES go to 5 ?/span>NO go to 4	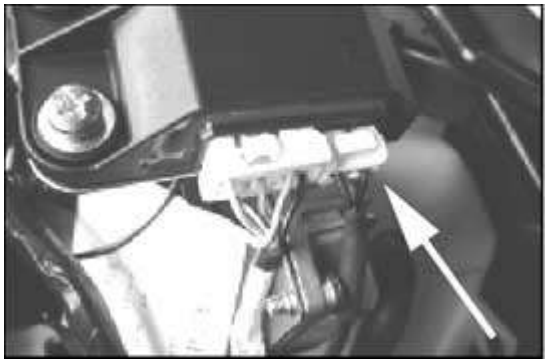

4 ?Restore the connection and check the presence of the code.

5 ?Disconnect the antenna connector and check continuity (8 ?2 Ω). YES go to 7 ?/span>NO go to 6	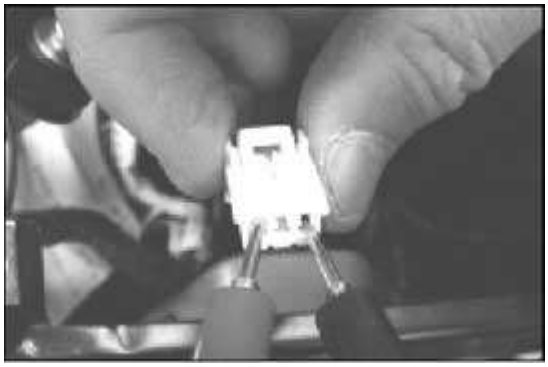

6 ?Replace the antenna

7 ?Check the proper position of the antenna.
YES go to9 NO go to 8

8 ?Place it in proper position.

9 ?Replace the decoder and check the presence of the code.

Code no. 3 denotes a system where the decoder perceives a transponder not provided for by programming. - Start-up disabled - Injection light on, solid	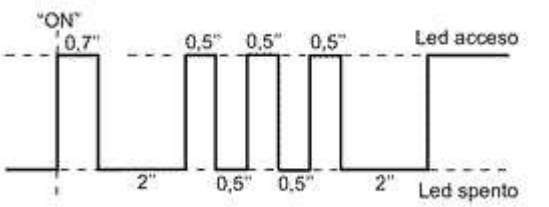
1- Check whether the code is still displayed using the master key.. YESgo to 3 ?/font>NOgo to 2	
2-Program again using all service keys	
3 -Check that all components (keys - decoder - controller) are properly matched. YESgo to 5 ?/font>NOgo to 4	
4- Restore	
5- Replace decoders and controller. Program the components again.	

Code no. 4 denotes a system where the decoder is blank and the controller is programmed. The key is recognised by the controller. - Start-up disabled - Indicator light	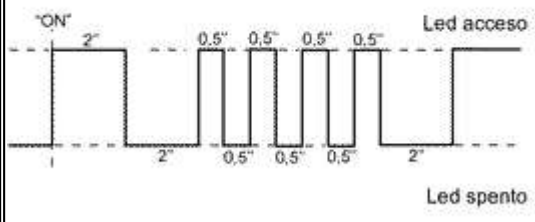

Repeat thekey programming procedure using the original MASTER key.

1-Check whether the injection indicator turns on for 5 sec. after switching to ON
YESgo to 2 ?/font>NOgo to 11

2 -Check the 7.5 A fuse no. 10 located in the front trunk.
YESgo to 4 NOgo to 3

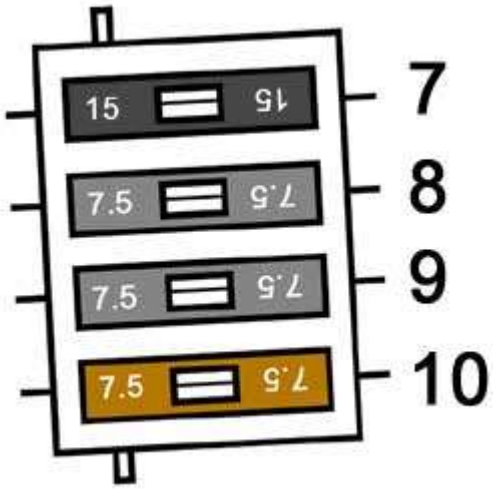

3 -Check for any short circuits on the instrument unit power supply line, check that the instrument unit has not short-circuited
YESgo to 5

4 -Connect pin no. 2 of the decoder connector (yellow-grey) to earth and check whether the led turns on
YESgo to 6 NOgo to 7

5- Restore
YESgo to 2

6- Replace the decoder and program again.

7 -Check the continuity of the yellow-grey wire by measuring between the decoder connector and the 8-pin connector to the instrument unit
YESgo to 8 NOgo to 10

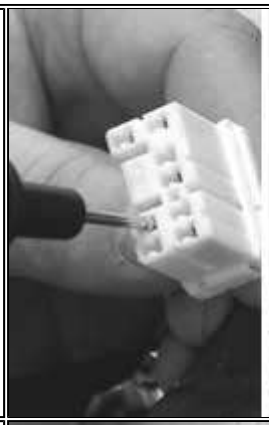

8 -Check the presence of battery positive voltage at the red-black wire of the 8-way connector of the instrument unit
YESgo to 9 NOgo to 10

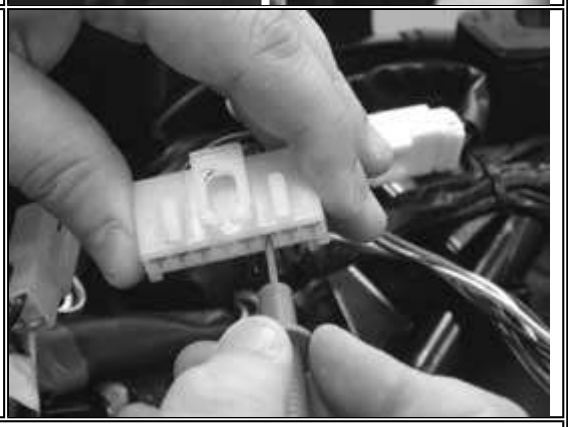

9 -Faulty led, replace the instrument unit

10 - Fix or replace the wiring.

11 -If the injection indicator does not turn on, check the decoder and controller power supply circuit

This section describes the operations to be carried out to check the power supplycircuit.

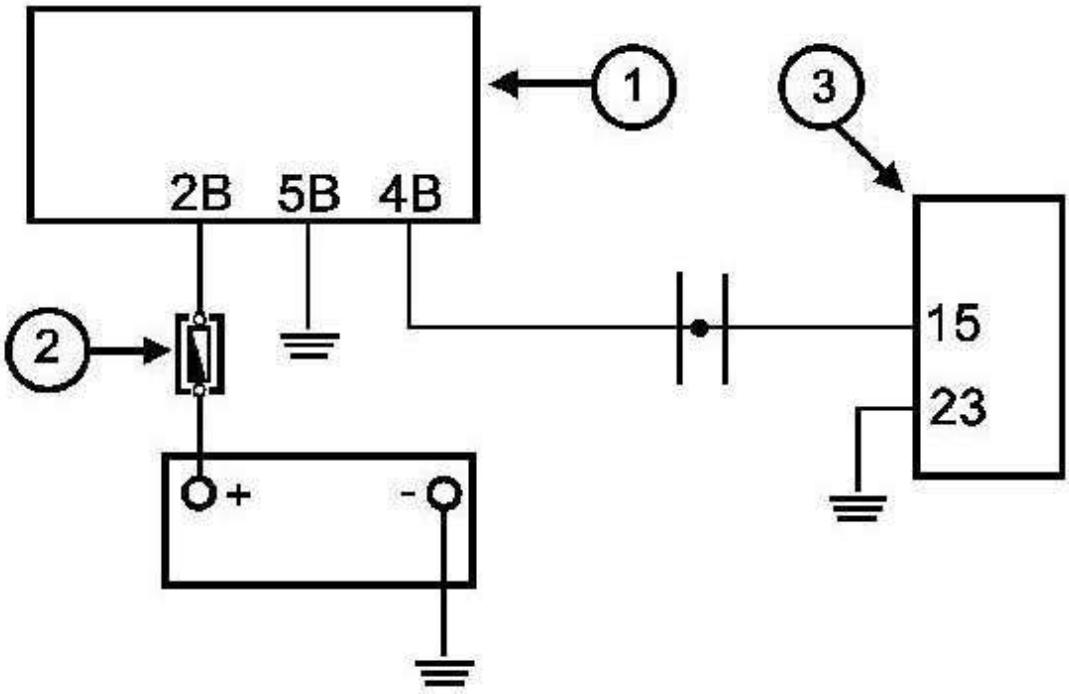

The decoder basic power supply is necessary forthe deterrent flashing management. The injection controller power supply isnecessary for the stepper motor management.
A power supply failure disables both ignitionand injection.
In case of power supply faults, the diagnostictester dwg. no. 020460Y gives the information "NO REPLY FROM THECONTROLLER".
To carry out the check, proceed as follows:

1 -Check whether the immobilizer system led indicates switching to ON and whether the deterrent flashing is on. YES go to 2 NO go to 7	
2 -The decoder is properly programmed. YES go to 3	
3 - Switch set to ON with side stand raised and emergency switch set to OFF. The injection indicator turns on for about 3 seconds. YES go to 5 NO go to 4	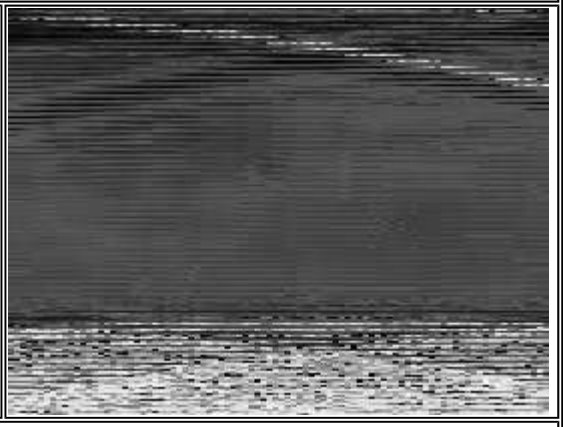
4 -Check the instrument unit and its power supply. YES go to 3	
5 -Set the emergency switch to RUN. The injection indicator turns on for about 5 seconds. YES go to 6 NO go to 7	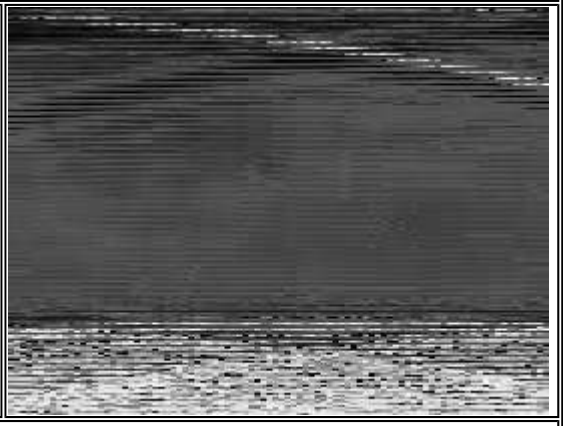
6 -The injection controller is certainly powered.	
7 -Check the efficiency of the 3 A fuse no. 3 located in the fuse-holder under the right side. YES go to 10 NO go to 8	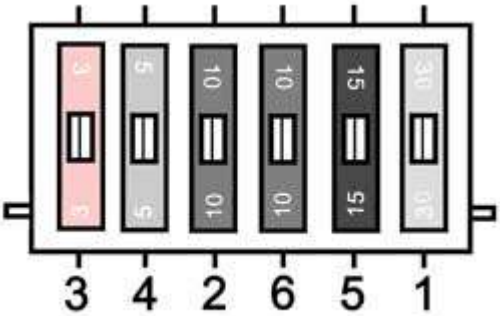
8 -Fix any wiring short circuits and replace the fuse. YES go to 1 NO go to 9	
9 -Check any short circuit on decoder or controller and replace, if needed. YES go to 1	

10 - Place the specific tool dwg. 020481Y between controller and power supply system. Disconnect the main decoder connector and check the following conditions: Terminal no. 3= battery positive Terminal no. 4= battery negative YES go to 11 NO go to 13	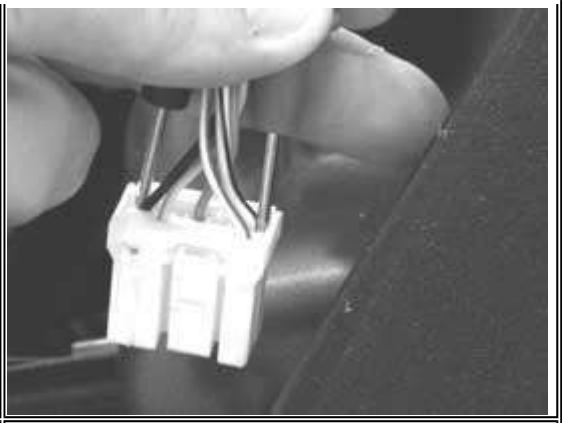
11 -Decoder with proper base power supply. Use the specific tool to check the controller power supply: Pin 17 = battery positive Pin 23 = battery negative YES go to 12 NO go to 13	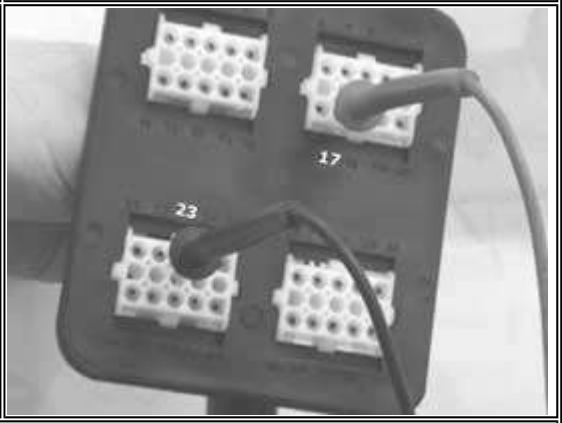
12 -Controller with proper base power supply.	
13- If the battery negative is not present, check continuity between Pin 23 of the specific tool and earth. Detect the presence of the battery positive on Pin 17 of the specific tool and on pin 3 of the decoder connector. YES go to 12 NO go to 14 YES go to 11	
14 -Fix the wiring.	

An under-panel power supply failure disablesboth ignition and injection functions. In case of power supply faults, thediagnostic tester dwg. no. 020460Y gives the information "NO REPLY FROMTHE CONTROLLER".

1 -Check whether the immobilizer system led indicates switching to "ON" YESgo to 2?NOgo to 4	
2- Raise the side stand.?Set the emergency switch to "OFF". Turn the key switch to "ON". Set the emergency switch to "RUN". Check whether the injection indicator turns on for 5 seconds YES? go to 3?NOgo to 4	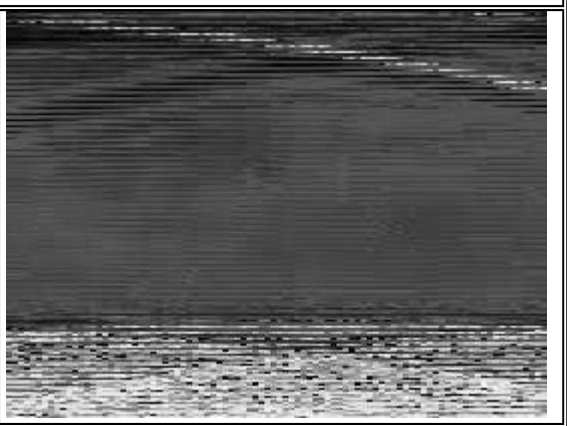
3-Under-panel power supplies are regular	
4 -Check the efficiency of the 5-A fuse no. 4 located in the fuse-holder under the right side. YES? go to 5 ?/font>NOgo to 6	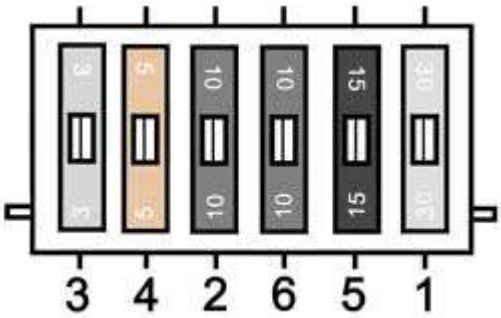
5- Place the specific tool dwg. No. 020480Y between controller and injection system. YES?go to 7	
6 ?Fix any short circuits and replace the fuse. Check decoder and controller, if necessary. YESgo to 1	
7- Disconnect the main decoder connector and check the following conditions: switch set to "ON", switch to "RUN" and side stand raised Terminal no. 8 = battery positive Terminal no. 4 = battery negative YES?go to 8 ?/font>NOgo to 10	
8 -Decoder with proper under-panel power supply. Use the specific tool 020481Y to check the controller under-panel power supply. Switch set to "ON", switch to "RUN" and side stand raised. Pin 26 = battery positive Pin 23 = battery negative YES go to 9oNO go to 10	

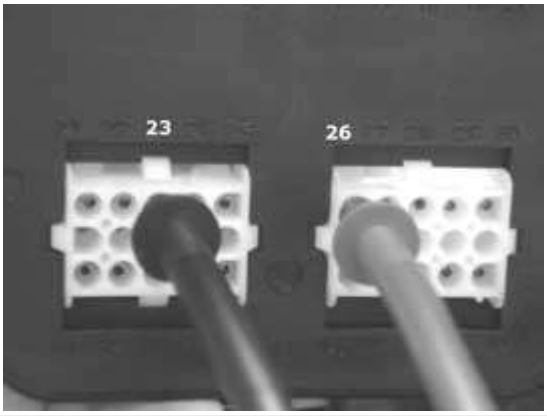

9 - Controller with proper under-panel power supply.

10 -If a single component is not powered, check the relevant connector. If the failure concerns both decoder and controller, check the controller ?decoder power supply line continuity.
Pin 26 controller - Pin 87 engine stop remote control switch = continuity
Pin 8 decoder - Pin 87 engine stop remote control switch = continuity
YES? go to 12?NOgo to 11

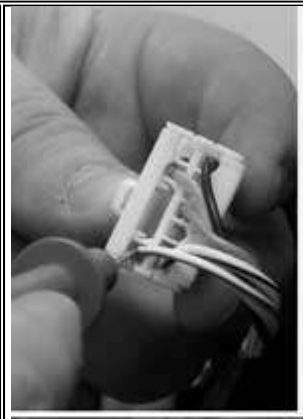

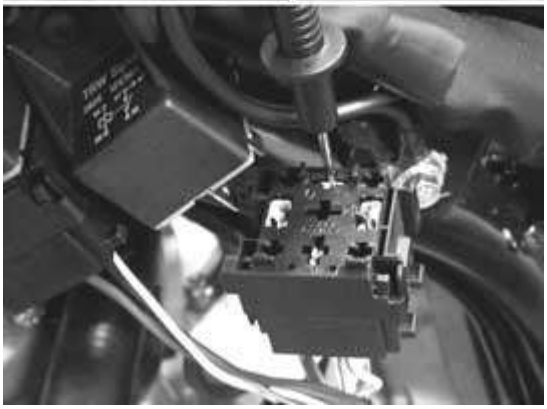

11 ix the wiring or the connection.
YESgo to 10

12 roper under-panel power supply
YESgo to 13

13 -Check the connector and the continuity of the key switch set to "ON"
Pin 1 - 2 = continuity
YESgo to 14

14 -Check the engine stop remote control switch connector and the switch efficiency. The connector can be recognised by its larger section white lead.

NOTE: check the coil resistance

85 - 86 = ~70Ω

YES go to 15

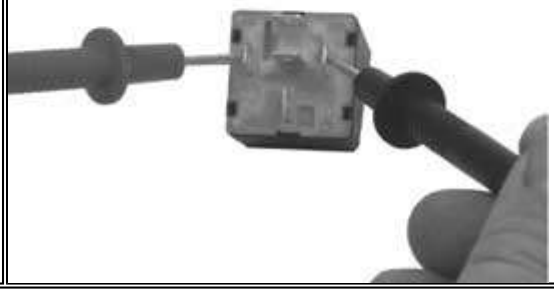

15 -Check the signal circuit:
- emergency switch and connector
- side stand switch and connector

YES go to 16

16 -Check the wiring continuity. Check the utility control main remote control switch.
Disconnect the master remote control switch.
Check the diode installed on the earth connection of the main remote control switch pickup.
86 - earth = continuity with high resistance (connect the tester: positive with 86; negative with earth). When the polarity is inverted there should be no continuity.

Circuit layout Legal Notes

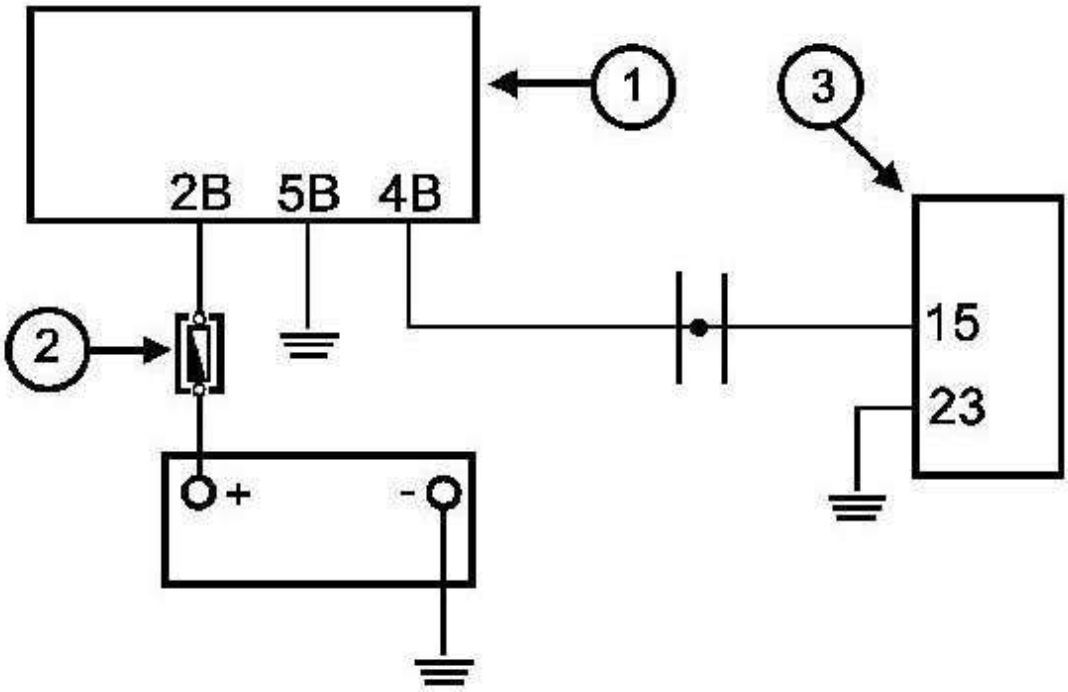

Circuitlayout 1
INSTRUMENT UNIT

2

FUSE 7.5A

3

CONTROLLER

TERMINAL	CONDITIONS		STANDARD VALUES
15 - 23	- switch set to "ON" - side stand raised - switch to "RUN"	during the check	O V
		after the check	battery voltage

Theinjection indicator light is controlled upon every switching to "ON" bythe 3-second timing generated by the digital instrument. This step is normallyinterrupted by the injection controller control. The timing lasts 5 seconds.
The diagnostic tester dwg. 020460Y is notprogrammed to check this circuit.
Proceed as follows:

1 - Set the switch to "ON". Set the emergency switch to "RUN". Keep the side stand raised. Check whether the indicator turns on for 5 seconds YES go to 2 NO go to 3	
2 - The system is in good working order.	
3 - Place the specific tool dwg. 020481Y between controller and system. YES go to 4	
4 - Switch set to "ON". Emergency switch set to "RUN". Side stand raised. Wait more than 5 seconds. 15 ?23 = battery voltage YES go to 5 NO go to 6	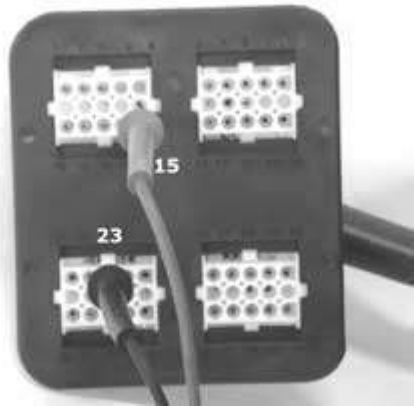
5 - Check the controller connector. Check the controller.	
6 -Check the continuity between pin 15 of the controller and brown ?black of the 6-input connector of the instrument unit.	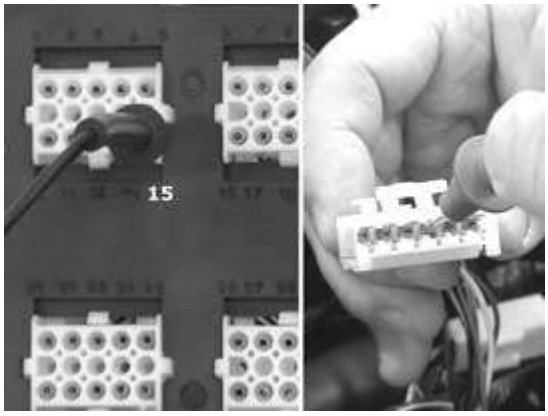

The injection controller manages the indicatornegative. The indicator should turn off after the initial check. The indicatorturns on again when the controller auto-diagnosis detects a failure. When thefailure is fixed, the indicator turns off again, but the relevant functionalchecks must be carried out. The indicator may turn on regardless of the engineoperation.

The injection controller is provided with anauto-diagnosis function.
When a failure is detected, the controller:
- turns on the injection indicator (only when itis current).
- enables the engine management check accordingto the data entered in the controller (where possible).
- stores the failure (always).

In the event of intermittent failures, theindicator follows the failure trend and storage remains active. Stored data areautomatically deleted when the failure does not occur for over 16 usage cyclesof the vehicle (heating -use - cooling). The battery disconnection does notdelete stored data.

- Checking stored failures Connect the diagnostic tester dwg. 020460Y to the vehicle system. Select the menu on the "ERRORS" function.	
The tester pages display the list of errors detectable by the auto-diagnosis. Errors detected by the auto-diagnosis are marked by one or two reference dots. They are arranged on two lines Line A = current failures (present) Line M = stored failures	

Errors detectable by the auto-diagnosis mayrefer to the following system circuits or sectors of the controller:
- throttle valve position signal
- ambient pressure signal
- cooling fluid temperature signal
- sucked air temperature signal
- wrong battery voltage
- Injector and relevant circuit
- HV coil and relevant circuit
- Stepper and relevant circuit
- Pump relay circuit
- Electric fan relay circuit
- RAM memory
- ROM memory
- EEPROM
- Microprocessor
- Signals panel (stroke -revolution signal unsteady cycle)

Underlined failures cause the engine to stop.
In the other cases, the engine works managed bythe basic data.

- Deleting stored failures After fixing any failures, connect the diagnostic tester	

dwg. 020460Y. Select the menu on the "errors deleting" function. Press OK and follow the instructions. Perform a trial cycle and check whether the failure occurs again.	

For further information on troubleshooting, referto the relevant sections of the chapter.

Fuel is fed to the injector by a pump, a filter and a pressure regulator integrated with the fuel level indicator inside the tank.	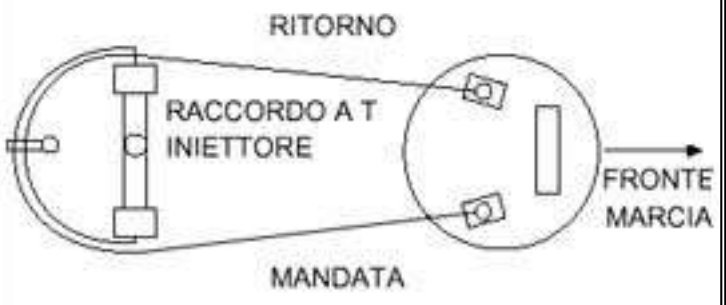
The pump unit is connected to the injector by: 2 semi-flexible pipes 4 quick unions 1 T union with O-ring and retain bracket for the injector The pipes are crossed and fixed to the intake manifold to prevent wear of the quick unions connected to the T union for the injector.	

NOTE:before working on the feeding system, carefully clean the parts to preventdamaging the quick union seal or to prevent infiltrations into the ducts.

WARNING The system is under pressure.

Do not smoke during the interventions.

Prevent any fuel spraying.

PRECAUTIONS:
- Before starting the engine, check the presenceof fuel into the tank.
- Do not use the vehicle in reserve for a longtime, up to the possibility of running out of fuel.
- If the vehicle is expected to remain unusedfor a long time, refill the tank at least to half the level.

Failureto observe these rule can damage the pump.

1	FUSE 30A	**8**	FUEL PUMP
2	FUSE 10A	**9**	INJECTOR
3	SWITCH	**10**	INJECTION CONTROLLER
4	ENGINE STOP REMOTE CONTROL SWITCH	**11**	MAIN REMOTE CONTROL SWITCH
5	FUSE 5A	**12**	ENGINE STOP SWITCH
6	CONTROL UNIT REMOTE CONTROL SWITCH	**13**	STAND SWITCH
7	H.V. COIL		

The controller starts the pump in the followingconditions:
- by setting the switch to "ON" withemergency switch to "RUN" and side stand raised. No pump feeding.
- when the stroke - revolution signal is onContinuous feeding.

The initial timing is useful to bleed the systemespecially after a stop with engine in temperature. In these conditions, thefuel altered by boiling will be mixed with that in the tank.
During use, the pump operation will be subjectto the engine revolution.

Proceed as follows:

1- Set the switch to "ON" with emergency switch to "RUN" and side stand raised. The pump rotates for 2 seconds YESgo to 2NOgo to 3
2-Try to start up. Check that the engine revolution matches the pump rotation. YES go to 4 ?/font>NOgo to 5
3-The pump does not rotate, or it rotates uninterruptedly. YESgo to 5
4- The pump power supply is conforming.
5- Connect the diagnostic tester dwg. 020460Y to the vehicle system. YESgo to 6
6 -Try to start up. Select the menu on the "ERRORS" function. Check whether there are any failures. YESgo to 7 YES go to 8 NOgo to 28
7- Pump control relay circuit failure. YESgo to 9
8 -Failure of: - injector - H.V. coil - signals panel YESgo to 18
9 -The controller has detected a failure on the line of pin 19 YESgo to 10 YES go to 11
10 -Line to earth. In this case, the pump is always in rotation when the under-panel voltage is on YESgo to 12
11 -Interrupted line. The relay cannot control the pump feeding YESgo to 13
12 -Check and restore the earth insulation of the controller line 19 and of the pump remote control switch line 85. YES go to 14
13 - Install the specific tool dwg. 020481Y between controller and the injection system. YESgo to 15
14 -Delete the code and check from the beginning.
15- Set the switch to "ON" with

switch to "RUN" and side stand raised. Wait more than two seconds and check the following conditions: 19 ~23 = battery voltage YESgo to 16 NOgo to 17	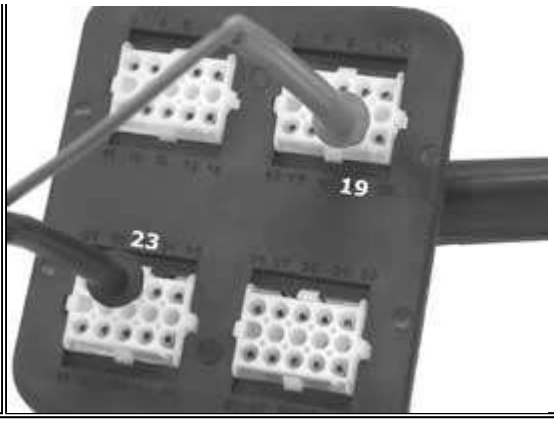
16 -Replace the controller	
17 -Check the presence of voltage (+ batt.) between pin 86 of the pump remote control switch and pin 23 of the controller. Fix the wiring, if required. Check the relay coil continuity. 85 - 86 = 100 ?50Ω	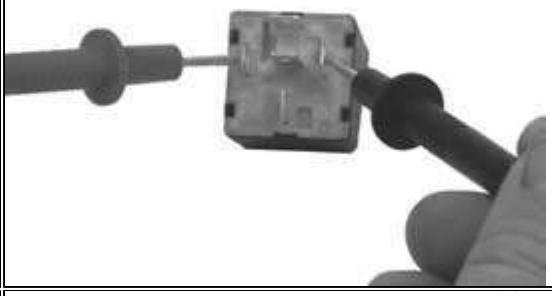
18 -Check the efficiency of the 10 A fuse no. 2 YES go to 20 NO go to 19	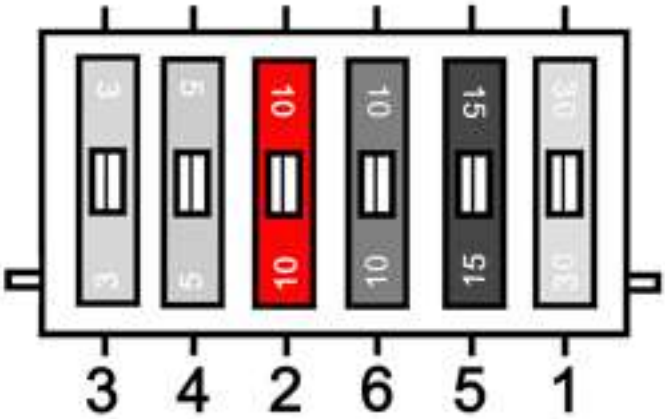
19 -Disconnect the following connectors: fuel pump, H.V. coil, injector YESgo to 22	
20 -Check the efficiency of the pump remote control switch. Check the wiring continuity between remote control switch and pump. 87 (remote control switch) - green/black (pump) = continuity NOgo to 21	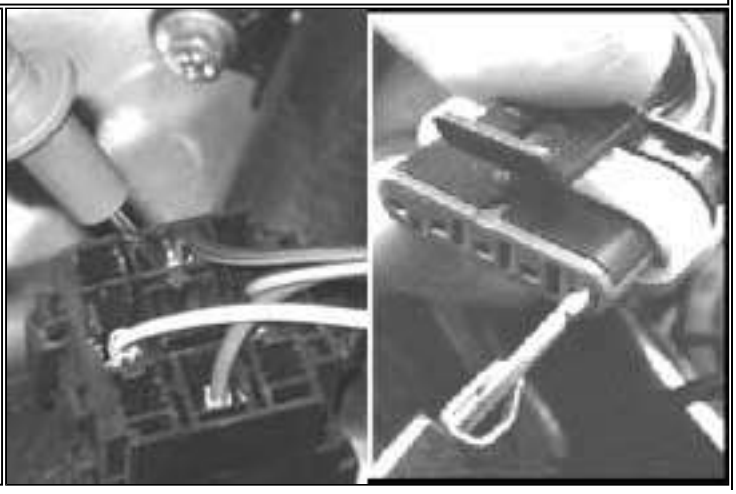

21 - Fix the wiring and repeat the check from the beginning.	
22 -Check the earth insulation of wiring 87 (pump remote control switch) ?23 = insulation (>1 MΩ) YESgo to 24 NO go to 23	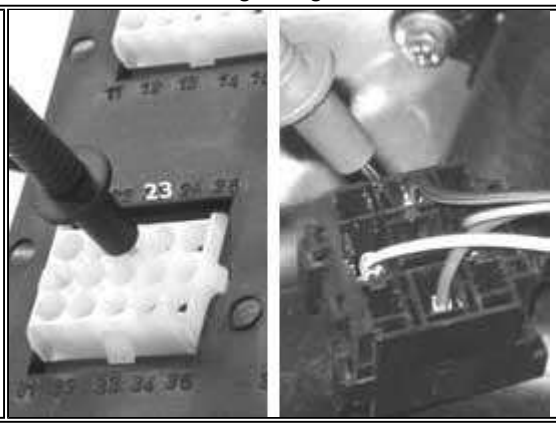
23 -Restore the wiring insulation and replace the fuse.	
24 -Check the earth insulation of the injector coil and of the HV coil primary. YES go to 25	
25 -Check the pump winding resistance: ~1,5Ω YESgo to 26 NO go to 27	
26 -Replace the fuse and check the pump.	
27 -Check the absorbed current.	
28- Select the diagnostic tester menu dwg. 020460Y on the "ACTIVE DIAGNOSIS" function. Select the fuel pump simulation function. Enable the function with under-panel power supply on and engine off. YES go to 29	
29 -The tester prompts the controller to start the pump for 30 seconds YES go to 30	
30 -Acoustically check the following conditions: - relay closure - pump rotation - relay opening YESgo to 31 NO go to 32	
31-The pump is fed. Perform a functional check of the pump.	
32-Check the efficiency of the pump connector. YES go to 33 NOgo to 34	
33 -Replace the fuel pump.	
34- Restore	

The injection controller manages the indicatornegative. The indicator should turn off after the initial check. The indicatorturns on again when the controller auto-diagnosis detects a failure. When thefailure is fixed, the indicator turns off again, but the relevant functionalchecks must be carried out. The indicator may turn on regardless of the engineoperation.

Before checking the system pressure, it is advisable to carefully clean the feeding system components. To carry out the checks it is necessary to use the specific tool dwg. 020480Y fuel pressure check kit.	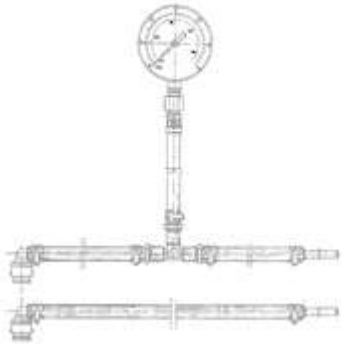

Before disconnecting any quick coupling,decrease the system pressure.
Disconnect the electric connector from the pumpsupport with running engine and wait until it stops.
The engine stops at approx. 1.5 bar.
Warning: disconnect the pipe terminal carefully. Protect youreyes from sprays.

The specific tool is provided with quick coupling of the same type as those of the system. To disconnect female terminals (injector side), press the two tails and extract. Caution -If you cannot pull out the terminal, do not force it, but try turning. The system is designed to further lock the terminal when the traction is increased.	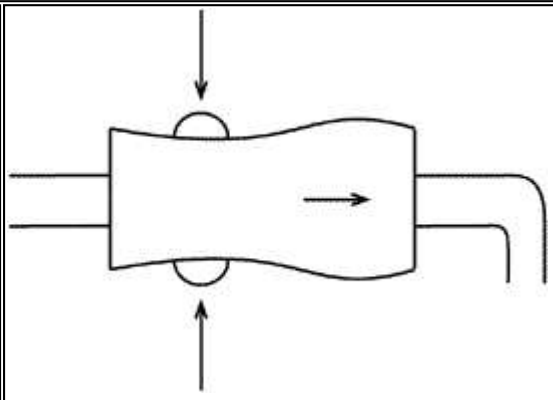
To disconnect male terminals (pump side), press the pipe coaxial rings towards the pump support and extract the terminals. Caution -If you cannot pull out the terminal, do not force it, but try turning. The system is designed to further lock the terminal when the traction is increased.	
The system pressure should be checked by connecting to the pump side. Connect the pressure gauge to the delivery duct (right side) and the extension pipe to the return duct (left side). Note: before assembly, check that the tool ducts are clean.	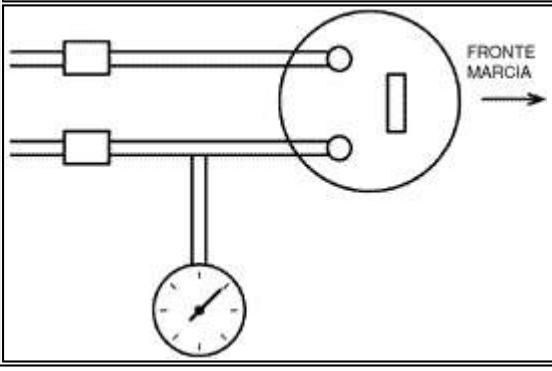

1- Connect the diagnostic tester dwg. 020460Y Select the menu on the "ACTIVE DIAGNOSIS" function. Select the "PUMP DIAGNOSIS" function. YESgo to 2	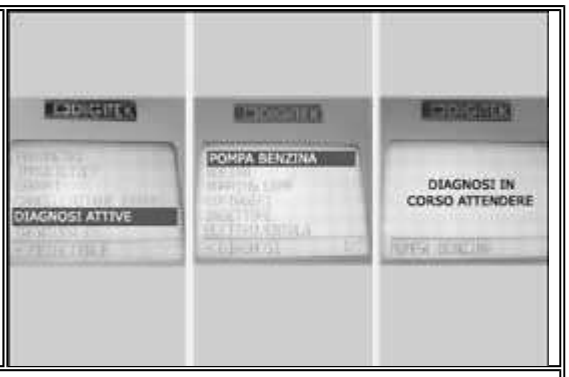
2- Enable the function with under-panel power supply on and engine off. The controller starts the pump for 30 seconds. YESgo to 3	
3-Let the system bleed for a few seconds. Make sure that there are no external leaks. Check the regulation pressure with pump power supply voltage higher than 12 V. Regulation pressure = 300 ~320KPa (3 ~3.2 BAR) YESgo to 4 NOgo to 5	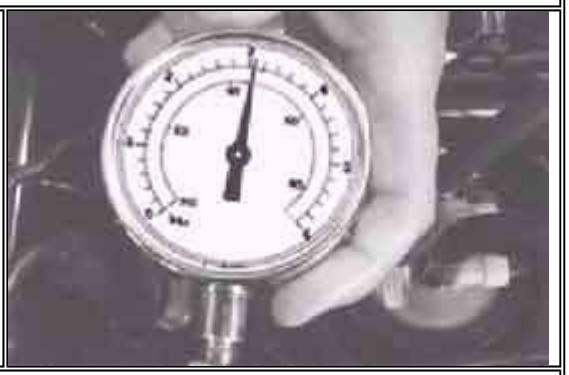
4 -The pressure regulator is efficient.	
5 -Pressure too high Check that the return duct is not clogged or squashed. YESgo to 6 NOgo to 7	
6- Replace the pressure regulator.	
7- Pressure regulation too low Start the pump rotation again. Using pliers with flat and long tips, temporarily clamp the return duct by the extension of the specific tool (the serial pipe does not allow this operation). fuel pressure = over 300 KPa (3 BAR) YES go to 8 NOgo to 9	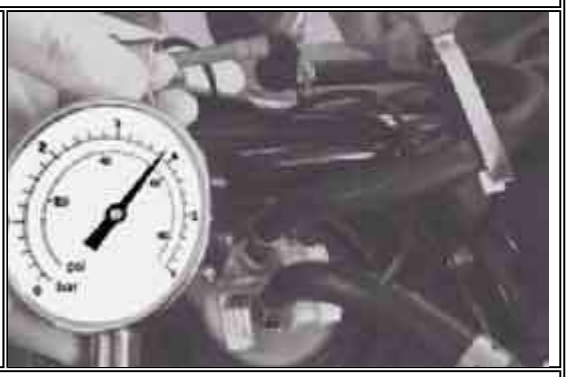
8- Replace the pressure regulator.	
9 -Replace the fuel pump.	

This procedure is useful during maintenance tocheck the filter efficiency in delivery.
Connect the diagnostic tester dwg. 020460Y.
Connect the fuel pressure check kit dwg.020480Y.

1 - Select the diagnostic tester menu on the "ACTIVE DIAGNOSIS" function. Select the "PUMP DIAGNOSIS" function. The pump starts for 30 seconds. YES go to 2	
2 -Bleed for a few seconds. Make sure that there are no leaks. Using pliers with flat and long tips, temporarily clamp the return duct by the extension of the specific tool dwg. 020480Y with pump power supply voltage higher than 12 V, check the system maximum pressure. Maximum pressure = > 600 KPa (6 BAR) YES go to 3 NO go to 4	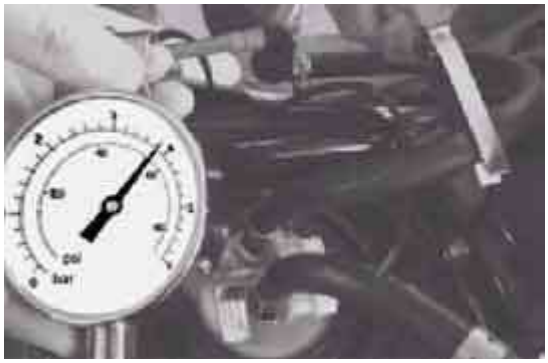
3 -Check the system seal. Start the pump for 30 seconds by the diagnostic tester dwg. 020460Y. When the pump stops, wait 3 minutes. Check the system pressure. Fuel pressure = over 200 KPa (2 BAR) YES go to 5 NO go to 6	
4 -If pressure is lower, carefully check the voltage with pump under stress. If voltage is higher than 12 V, replace the pump.	
5 - The system seal is efficient. Check the free flow rate. GO to 16	
6 - Repeat the test. When the pump stops, use pliers with flat and long tips to temporarily clamp the return duct by the extension of the specific tool. This causes an increase of the fuel pressure. GO to 7	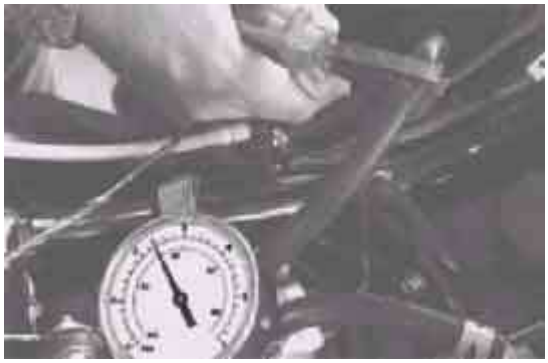
7 -Check whether the pressure decreases with the same trend as the system when free from bottlenecks GO to 8	

8 -Pressure decreases much more slowly YES go to 9 NO go to 10	
9 - Replace the pressure regulator. Check the system seal again.	
10 -There occur trend variations YES go to 11 NO go to 13	
11 -Repeat the test clamping the pipe of the specific tool dwg. 020480Y in the portion between the branch and the injector. Check whether the pressure decreases with the same trend as the system when free. Pressure decreases much more slowly YES go to 12 NO go to 13	
12 -Check and replace the injector, if required, due to an insufficient seal (see - THERMAL UNIT AND TIMING SYSTEM).	
13 -There are no trend variations Repeat the test clamping the pipe of the specific tool dwg. 020480Y in the portion between the branch and the pump. Check whether pressure decreases much more slowly. YES go to 14 NO go to 15	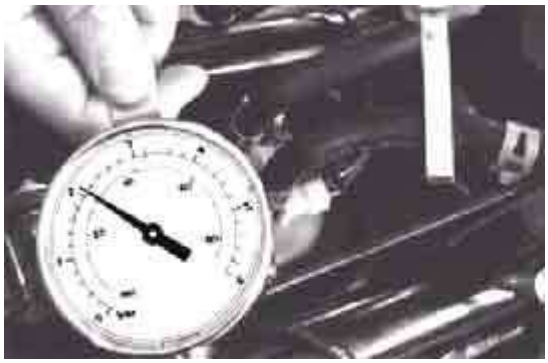
14 -The pump unidirectional valve is faulty. Replace the pump (see pump support overhaul).	
15 -Check the pipe and the injector union seals more carefully. Check the component seals again, if needed. NOTE: a poor system seal only affects the start-up velocity.	
16 - Disconnect the pump connector, start the engine, wait until it stops and connect the connector again. Disconnect the fuel return pipe from the pump support (left pipe). GO to 17	
17 -Introduce the return pipe into a graduated container. Using the diagnostic tester dwg. 020460Y, start the fuel pump for 10 seconds. Make sure that the power supply voltage is more than 12V. Measure the amount of fuel delivered.	

Pump free flow rate = 300 ?320 cc. YES go to 18 NO go to 19	
18 -The fuel filter is not clogged. The vehicle can be used respecting the limit of 48000 Km.	
19 -The flow rate is less than 250 cc. The fuel filter is dirty. Replace the pump support.	

This section describes the operations to be carried out to perform electric checkson the pump.

Disconnect the connector from the pump support. Using a tester, measure the pump winding resistance. Connect the tester prods to the pump support pins as shown in the figure. Resistance **= ~ 1.5** Ω In case of infinite resistance, replace the pump.	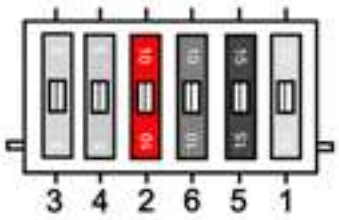

With infinite resistance, the pump does notrotate.
With resistance close to 0 Ω the pumpabsorbs too much, with the possibility of burning the 10-A fuse no. 2.
Performthe following check.

The pump absorption may vary according to:
- power supply voltage
- pump running-in
- regulation pressure
- delivery filter cleaning

To check the absorbed current, proceed as follows:
-disconnect the pump remote control switch connector.

- with key switch set to "OFF", connect the jumpers 30-87 on the connector using the tester prods on amperometer function (see figure).
- check the pump rotation and absorption

Absorbed current = ~ 3.5 ~4.2 A

NOTE: this absorption refers to:
- power supply voltage = ~ 12 V
- pump run-in
- system pressure = 300 KPa (3 bar)
- fuel filter clean

The a dirty filter causes an increase of the absorption. If the overpressure valve opens, the pump absorbs ~ 6? A.
In case of excessive absorption(5A), replace the filter. See pump support overhaul.
If the fault continues, replace the pump.

To check the fuel filter inspect the following:
- Free flow
- Current absorbed by the pump

A clogged filter causes:
- Poor performance especially- Pump absorption increase

NOTE:Do not blow the filter with compressed air. A damaged filter may cause theinjector clogging.

To remove the pump support from the tank, proceed as follows: - Disconnect the electric connector. - Start the engine and wait for the spontaneous stop. - Clean the tank and the pump support (wash and blow with compressed air, if needed). - Disconnect the delivery and return pipes by the quick unions. Warning - Prevent any fuel spraying.	
- Loosen the pump support fixing ring nut (RH threading).	
- Remove the pump support and the sealing gasket. NOTE: when extracting, be careful not to deform the float arm.	
To replace the components, proceed as follows: (1) Level indicators: - Note the assembly position and the path of the two connecting wires. pos 2 = wire connected to the circuit pos 3 = wire connected to the mobile arm	

- Before re-assembling, carefully check the tank cleaning. In case of dirt or water, remove the tank. - Install the sealing gasket on the pump support. - Introduce the pump into the tank being careful not to deform the level indicator arm.	
- Place the sealing gasket on the tank. - Install the pump support onto the seat aligning the connector with the vehicle longitudinal axle. **NOTE: an incorrect orientation may impair the level indicator performance.**	

- Screw the fixing ring nut and tighten thoroughly.

Tightening torque:

Motor pump locking ring nut 20 Nm

- Connect the feeding circuit pipes again and check the proper introduction by pulling and turning upwards.
- Reconnect the electric connector.
- Recharge the system with at least 4~5 timings (key switch OFF-ON)

NOTE: do not start the pump before refilling the tank. Failure to observe this rule can damage the pump.

- Check that the feeding system quick couplings seal is efficient.

	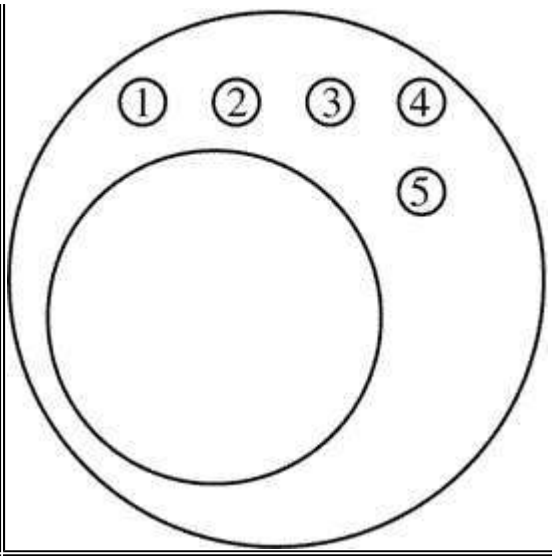
Pass the wires through the hole obtained between filter and pressure regulator. - Disconnect and extract the wires - Using a screwdriver on the retain tab as shown in the figure, extract the level indicator from the support.	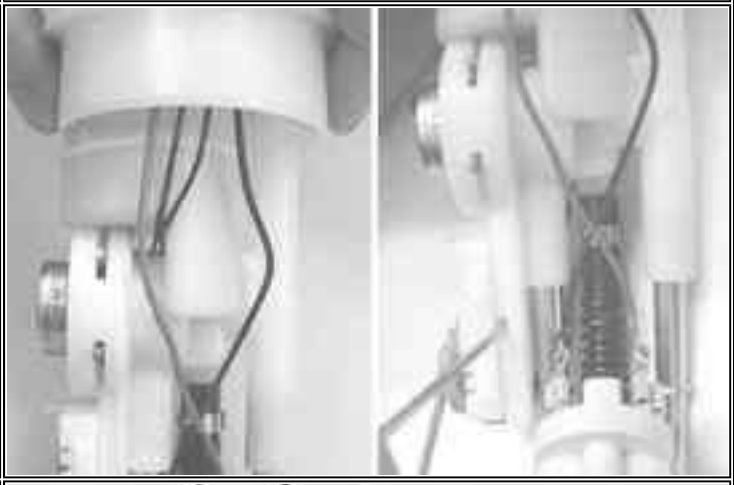
Level indicator check The check may also be carried out before removal from the support. Measure the resistance between the two level indicator wires. Moving the float arm, check that the resistance is subject to gradual variations according to the arm motion. Limit values empty tank position = 95 ~105 Ω full tank position = 0 ~9 Ω - Repeat the operations in the reverse order for re-assembly.	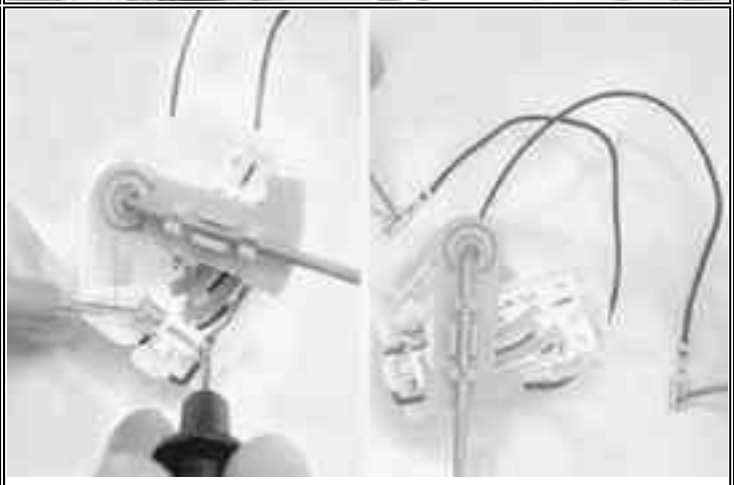
(2) Pressure regulator: - Remove the locking spring - Extract the pressure regulator with sealing rings. NOTE: to overcome the resistance of the O-rings, lever with a screwdriver through the openings obtained on the stop	

insertion side. - Lubricate the O-rings and repeat the operations in the reverse order for re-assembly.	
(3) Fuel pump - Note the position of the power supply wires on the support pos 1 = positive (red) pos 4 = negative (black) NOTE: the pump connections are not interchangeable. -Disconnect the power supply cables	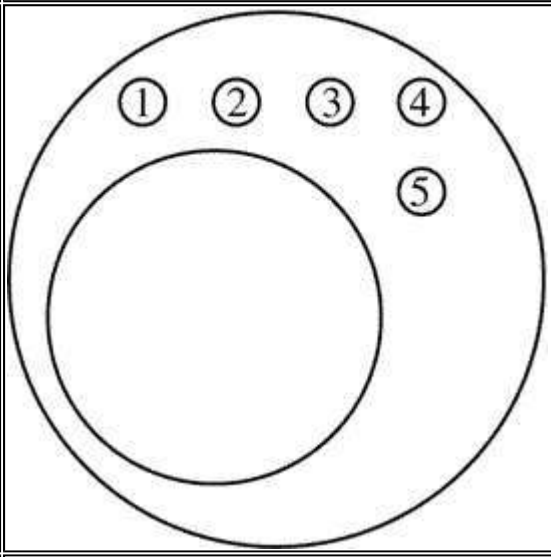
- Cut the delivery pipe fixing band on the support.	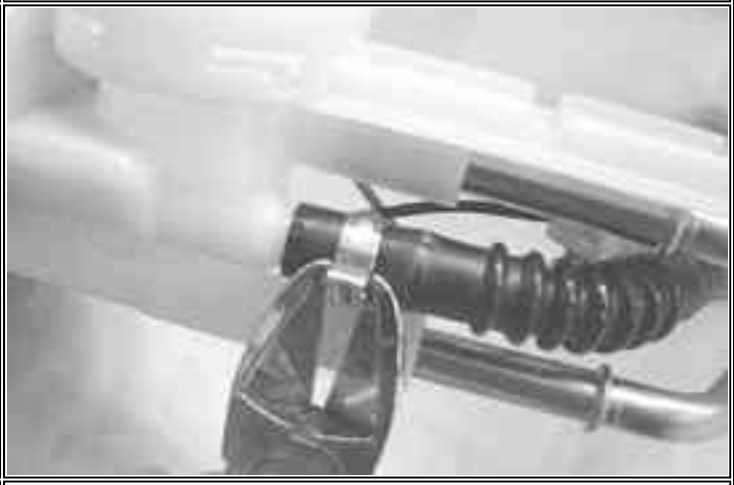
- Remove the pump fixing washer	

- Remove the filter coupling pipe - Remove the pump with annular support and pre-filter.	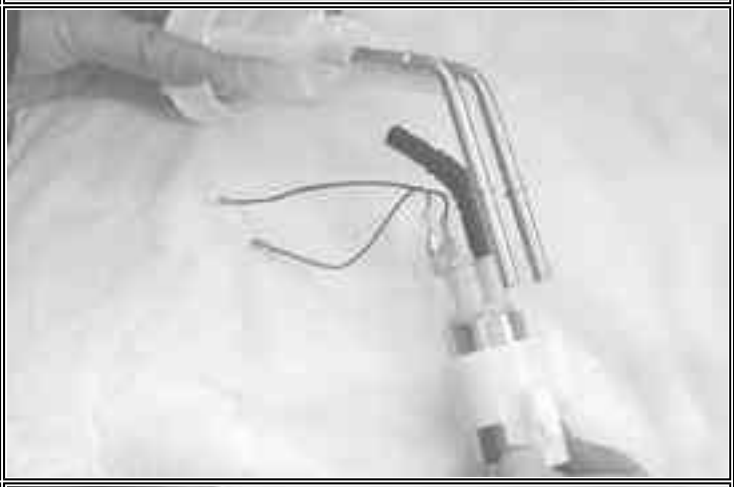
- If the pump requires replacement, remove the pre-filter and the annular support. - For re-assembly, perform the removal operations in the reverse order using a new band for the delivery pipe and a new pump fixing washer.	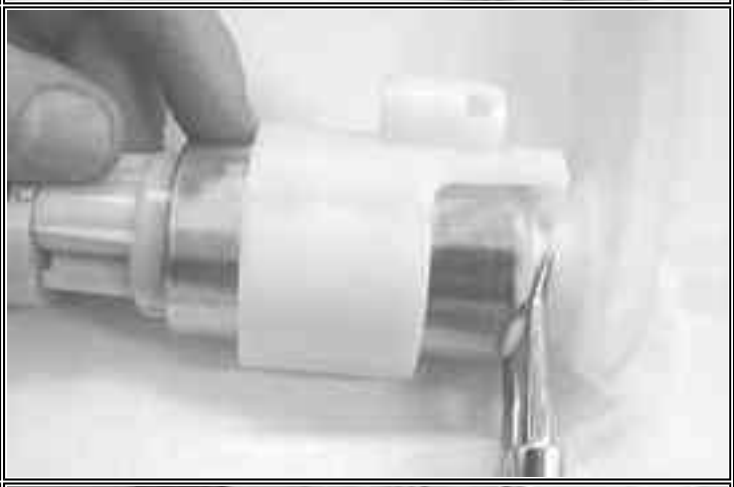
NOTE: To clean the pre-filter, use gasoline and compressed air. Orientate the pump properly.	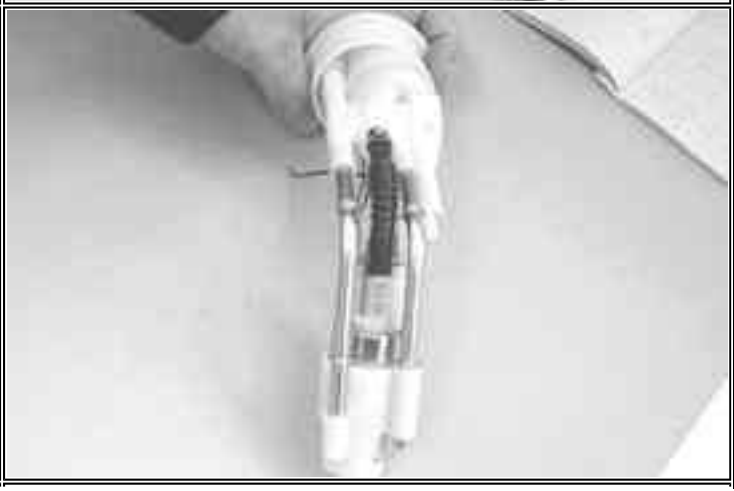

(4) Fuel filter The fuel filter is supplied already assembled with the pump support. To replace the support, move the level indicator, the pressure regulator and the pump from the old to the new support. For these operations, follows the instructions given above.	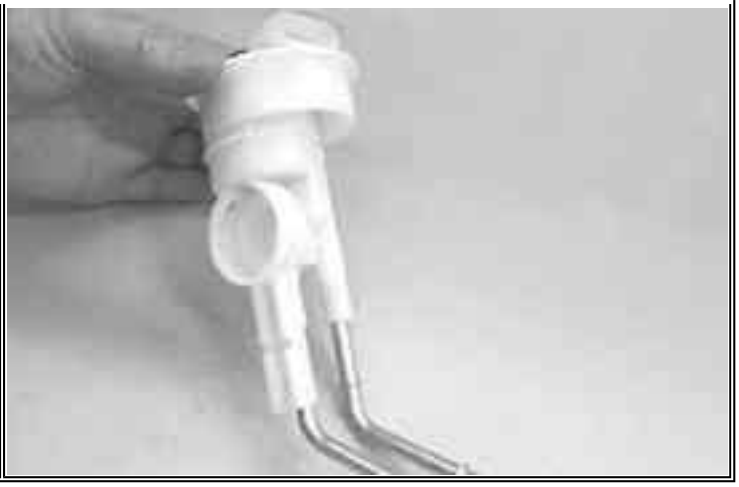

TERMINAL	CONDITIONS	STANDARD
13 - 23	During the pump timing with engine off	battery voltage

Circuitlayout

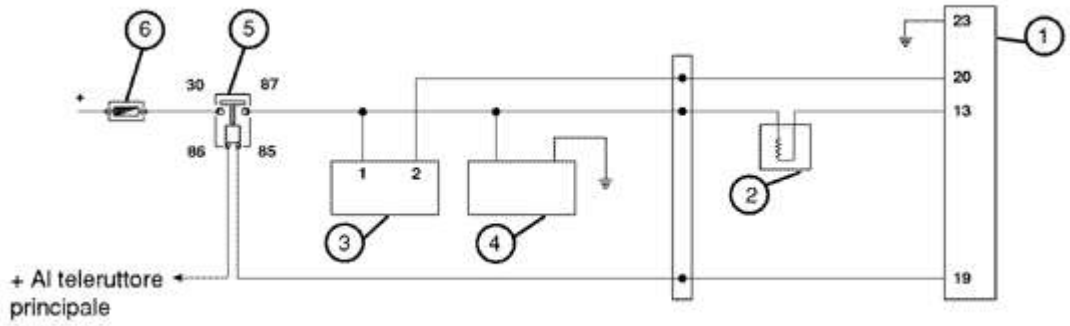

1	ELECTRONIC CONTROLLER	4	PUMP
2	INJECTOR	5	CONTROL UNIT REMOTE CONTROL SWITCH
3	H.V. COIL	6	FUSE 10A

1- Connect the diagnostic tester dwg. 020460Y. Select the menu on the "ACTIVE DIAGNOSIS" function. Select the "INJECTOR" function. YESgo to 2	
2- Enable the function with under-panel power supply on and engine off. The controller controls the fuel pump continuously and at the same time starts the injector opening. The injector openings are repeated for a few seconds. YESgo to 3	
3 -Acoustically check the injector openings and wait for the tester results. YESgo to 4 NO go to 5	
4 -5 injector openings detected. The injection tester displays "test successful". YES go to 7	
5 -No injector openings detected. The injection tester displays "test failed". YESgo to 9 ?/font>NOgo to 6	
6 -No injector openings detected. The injection tester displays "test successful". YESgo to 8	
7 - The injector control circuit is efficient. Perform the injector hydraulic check.	
8- The injector control circuit is efficient. Repeat the acoustic check and perform the injector hydraulic check for safety reasons.	

9- Select the menu on the "ERRORS" function. Check whether the injector failure message only is displayed. YESgo to 14 NOgo to 10	
10 -There are also fault messages for: pump relay YESgo to 13 NO go to 11	
11 -There is also a fault message for the HV coil. YESgo to 12	
12 -Check the power supply circuit with the 10A fuse and the remote control switch. Common feeding to the fuel pump.	
13- Check the pump relay control circuit	
14- Install the specific tool dwg. 020481Y between controller and system. YESgo to 15	
15 -Arrange a multimeter with positive prod on pin 13 and negative prod on pin 23. Set the switch to "ON" with switch to "RUN" and side stand raised. Check the presence of battery voltage during the fuel pump timing. 13 ~23 = battery voltage for 2 seconds. YES go to 16 NOgo to 17	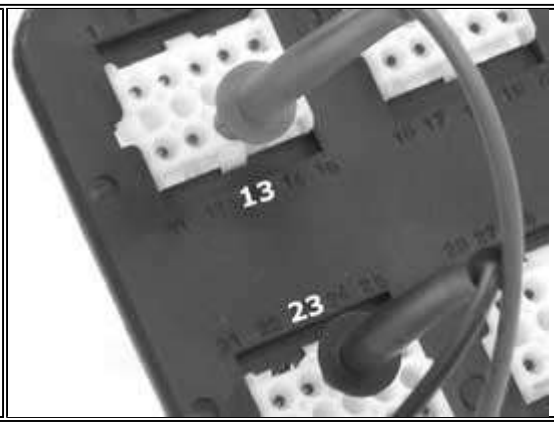
16- The injector electric circuit is steady Repeat the checks. If the fault continues, check the controller connector. Replace the controller, if necessary.	
17- Disconnect the controller connector. Check the resistance between pin 13 and pin 87 (black/green wire) of the pump remote control switch. 13 - black/green = 14.5Ω +- 5% (injector resistance) YES go to 19 NO go to 18	

	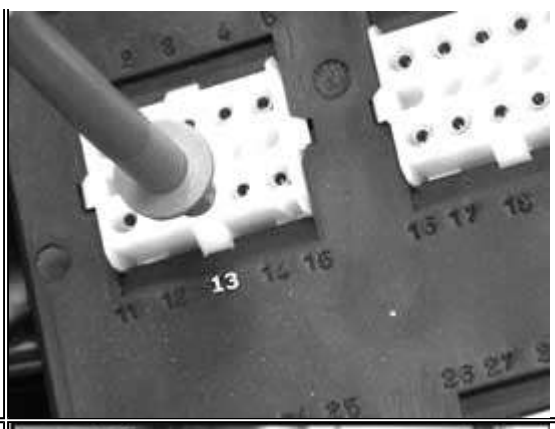
18 -No continuity. Disconnect the connector and repeat the resistive check directly at the injector terminals. Resistance = 14,5Ω ?2% YESgo to 21 NOgo to 22	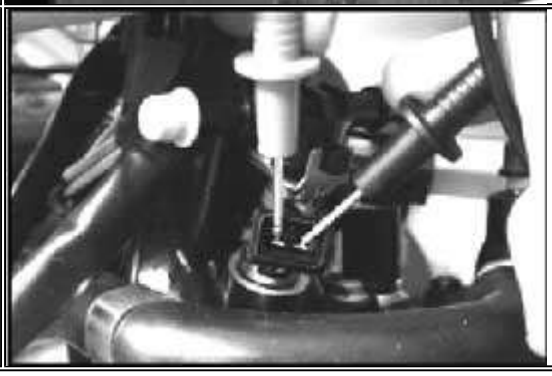
19 -Check the earth insulation of the injector negative line. Disconnected controller and injector connectors. 13 - 23 = Ωinfinity NOgo to 20	
20 -Fix or replace the wiring.	
21 -Check the continuity between the injector power supply connector (red - yellow) and pin 13. Restore the continuity, if required, or replace the wiring	
22 -Replace the injector.	

To check the injector it is advisable to removethe intake manifold along with throttle body and injector.
The injector should be removed from the manifoldonly if necessary.
For these operations, see the .

1 - Connect the diagnostic tester dwg. 020460Y. Use the socket in the under-saddle compartment. Install the specific tool dwg. 020480Y fuel pressure check kit. In this case, the injector can be connected directly to the tool quick couplings. GOto 2	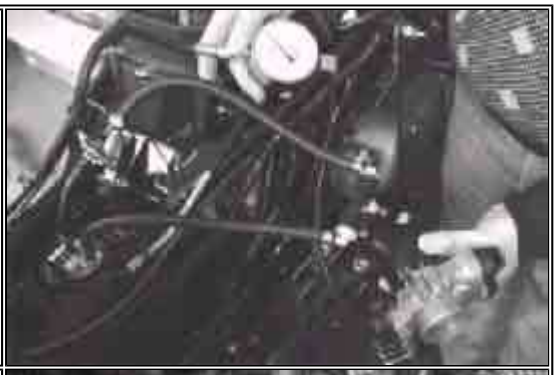
2 -Prepare a graduated container with minimum capacity of 100 cm3 and a resolution of 100 cm3 Connect the injector to the wire supplied with the injection tester. The wire is provided with alligator clips for direct connection to the battery. Prepare an auxiliary battery. Set the switch to "ON" with switch to "RUN" and stand raised. Select the "active diagnosis" function. Start the pump diagnosis. During the first 30 seconds of pump diagnosis, power the injector by the wire and the auxiliary battery for 15 seconds. Collect the fuel delivered by the injector into the graduated container. Power supply pressure = 300 KPa (3 BAR) Quantity delivered = approx. 40 cm3 YES go to 3 NO go to 4	
3 -Perform the injector sealing test. Dry up the injector outlet by a compressed air jet. Start the fuel pump. Wait a minute, check that there are no leaks from the injector outlet. A light bleeding is normal. Limit value = 1 drop in 1 minute YESgo to 5 NOgo to 6	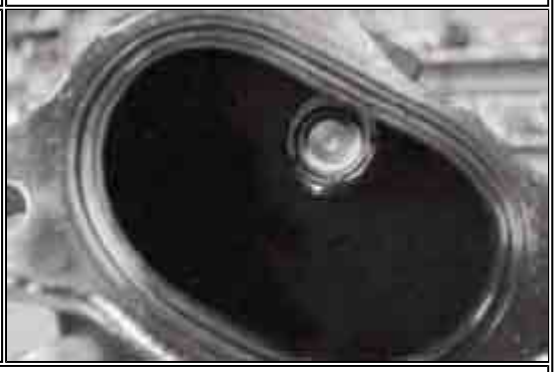
4 -Higher quantities are not expected. For lower quantities, replace the injector (THERMAL UNIT AND TIMING SYSTEM).	
5- The injector is conforming.	
6- Repeat the test. If the fault continues, replace the injector (THERMAL UNIT AND TIMING SYSTEM).	

The injector atomisation cannot be checked by simple methods. The injector is provided with 5 holes whose angulation forms a jet with a taper of about 80degree The jet thus formed impinges both intake valves. NOTE: - An injector with low flow rate affects the	

maximum performance. - An injector with poor seal affects idling and the start-up features after a short stop with hot engine. - In case of clogging of the injector, it is necessary to replace it, along with the fuel filter contained in the tank. Carefully clean the system and the tank.	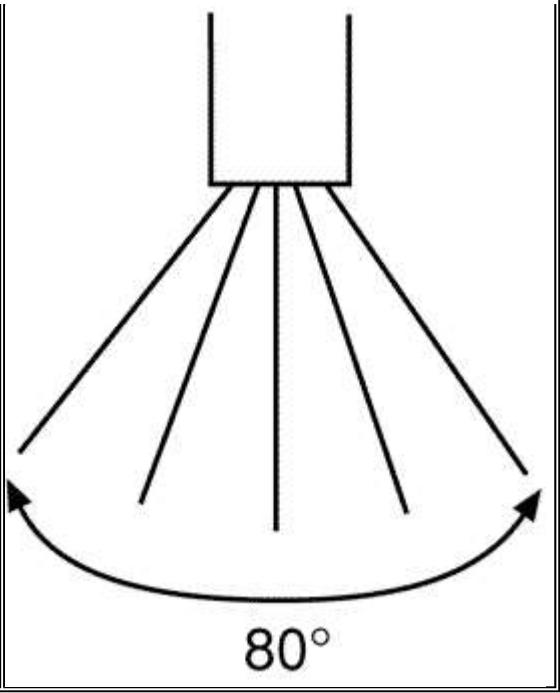

TERMINAL	CONDITIONS	STANDARD
7 - 12	Start-up	0,8 ?4,5 V~

Circuit layout

1	CONTROLLER	**2**	ENGINE RPM SENSOR

The sensor allows recognising the revolutionsand the angular position of the driving shaft referred to the TDC. Since thewheel speed sensor is pivoted on the camshaft it is also possible to recognise the4-stroke cycle. Such solution allows controlling the injector and the sparkplug every two revolutions of the driving shaft.
The sensor is of the reluctance variation typeand is therefore comparable to an alternate current generator that powers thecontroller.
The signal frequency is interrupted by thevacuum generated by the two missing teeth on the wheel speed sensor.
The sensor signal is indispensable for theengine start-up.
The engine can work also with an unsteadysignal, thanks to corrective interventions made by the controller.
The total revolution signal failure does notcause the injection indicator to turn on.
When the signal failure (open circuit) occursduring use on the road, the indicator light indicate the start of a failure bya flash as follows:

A Indicator light on
B Indicator light off

To check the sensor and the relevant circuit,proceed as follows:

1- Connect the diagnostic tester dwg. 020460Y.
Start the engine.
The engine starts regularly.
YES go to 2 NO go to 3

2 - Select the menu on the "ERRORS" function. Check whether there are any failures relating to the "signals panel".
YESgo to 9 NOgo to 6

3- Select the menu on the "ERRORS" function.
YES go to 5 NO go to 4

4 -No failure detected.
GO to 9

5 -Proceed according to the indications detected.

6 - Select the menu on the "parameters" function.
Check the number of
Lost synchronisations = 1 tooth
Lost synchronisations = > 1 tooth
YESgo to 8 NOgo to 7

7 - Indication = 1-3
The stroke revolution signal is conforming

8 -The value increases gradually over time if you insist trying to start the engine.
Check the circuit and the sensor.
GOto 9

9-Install the connection wiring between controller and the injection system. Tool dwg. 020481Y.
Do not connect to the controller.
GOto 10

10-Disconnect the connection connector between stroke revolution sensor and injection system.
Measure the sensor resistance by connecting the multimeter between the terminals marked with ?/φοντ>and?/φοντ> .
Stroke revolution sensor resistance =680 +-15%
YESgo to 11 NOgo to 12

11 ?Check the earth insulation between one pole and the shielding.
S - + = infinity (>1MΩ)
YESgo to 13 NOgo to 12

12- Replace the revolution sensor.

13- Reconnect the stroke revolution sensor connector.
Repeat the resistance check through the injection wiring pin 7 pin 12.
7-12 = 680 +-15 %
The value should be very close to that detected directly by the sensor.
YESgo to 17 NOgo to 14

14 -Higher or infinite resistance.
YES go to 15 NO go to 16

15 -Check the connectors carefully
Disconnect and check the continuity between connector and pin 7-12
Connector-7 = continuity
Connector-12 = continuity
Fix the connectors or replace the wiring.

16 - Resistance 0. Replace or fix the injection wiring (short circuit)
17 -Check the earth insulation again. 7-23 = infinity (>1M.) YES go to 19 NOgo to 18
18 -Check the sensor and controller connectors. Replace or fix the injection wiring
19- Measure the alternated voltage between pins 7 and 12 with engine at start-up speed. 7-12 = 0,8?,5 V~eff Revolution speed = ~300?00 G/1' YESgo to 20 NOgo to 21
20- The sensor circuit is conforming. If the start-up failure continues, replace the controller.
21 -Check the sensor air gap and magnetic activity. See [1007]?Thermal unit and timing system ?/span> If the magnetic activity is null, replace the sensor.

NOTE

-The sensor cable must be properly installed for servicing.

-Do not force the cable.

-A poor cable shielding can impair the engine performance at high speed.

This section describes the ignition system operation.

TERMINALS	CONDITIONS	STANDARD
20 - 23	During the pump timing with engine off	Battery voltage

Circuit layout

1	ELECTRONIC CONTROLLER	4	PUMP
2	INJECTOR	5	CONTROL UNIT REMOTE CONTROL SWITCH
3	H.V. COIL	6	FUSE 10A

The ignition system is integrated with theinjection and is of the inductive high efficiency type.
The controller manages two important parameters:
- Ignition advance
This is optimised according to the engine rpm,to the engine load, temperature and ambient pressure.
With idle engine, it is optimised to obtain thestabilisation of the speed at 1450 ?50 R/1'.
- Magnetisation time
The coil magnetisation time is controlled by thecontroller. The ignition power is increased during the engine start-up.
The injection system recognises the 4-strokecycle and therefore, ignition is only controlled during compression.
To check the ignition circuit, proceed asfollows:

1- Connect the diagnostic tester dwg. 020460Y. Select the menu on the "ACTIVE DIAGNOSIS" function. Start the HV coil check with switch set to "ON", switch to "RUN" and side stand raised. Wait for the tester to display: "TEST SUCCESSFUL"
YESgo to 3 NO go to 2

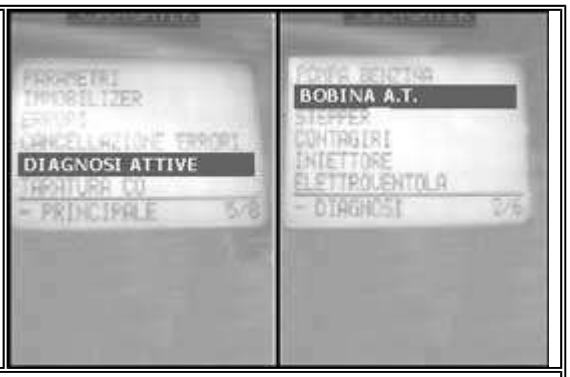

2 - The tester displays: "TEST FAILED". Repeat the test and wait for the tester to display: "TEST SUCCESSFUL"
YESgo to 3 ?/font>NOgo to 4

3- Select the menu on the "ERRORS" function. Check the presence of current or stored errors relating to the H.V. coil.
YESgo to 6 NOgo to 5

4 - Test failed
YESgo to 6

5- The coil control circuit is efficient.
Check the H.V. coil secondary, the cable and the screened cap

6- Install the specific tool dwg. 020481Y between the injection system and the controller.
Measure voltage between pins 20 and 23 of the specific
tool during the fuel pump timing step.
To start the timing, set the switch to "ON" with switch to "RUN" and side stand raised.
20 -23 = battery voltage (coupled to the pump rotation -2 seconds).
If you want to increase the test time, enable the "pump relay diagnosis" function
(30 seconds)
YESgo to 7 NO go to 8

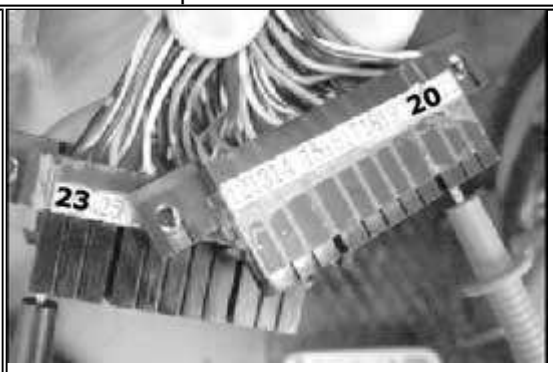

7- The coil primary control circuit is efficient.
Carefully check the connectors to the controller and to the coil.
Replace the controller, if necessary.

8 -Disconnect the connector to the H.V. coil primary.

Repeat the voltage check between the black-green wire and earth. Black-green-23 = battery voltage (coupled to the pump rotation-2 seconds). YESgo to 10 NOgo to 9	
9 -Check the black-green wire continuity. Replace or fix the wiring. NOTE: a failure of the remote control switch would cause the pump rotation failure	
10- The positive power supply is conforming. Check the continuity between the pink-black wire of the connector and pin 20. Pink-black-20 = Continuity YESgo to 12 NOgo to 11	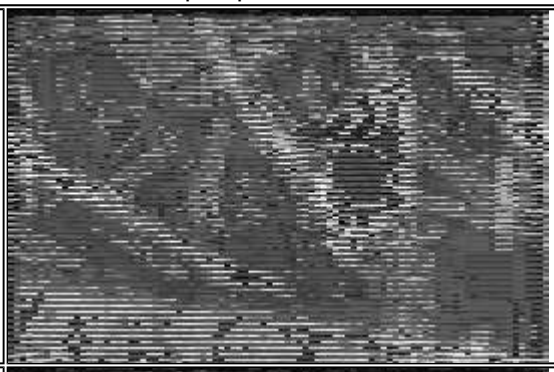
11 -Check the continuity of the punk-black wire in the two systems. Pink-black (coil connector)-20 = Continuity. YESgo to 12 NOgo to 13	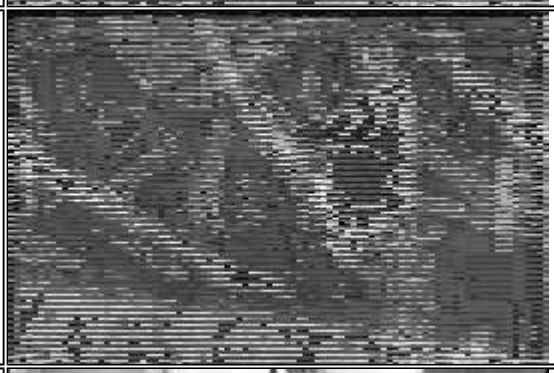
12 -Check the earth insulation of the negative line. 20-23 = Ω infinity (>1MΩ) YESgo to 15 NOgo to 14	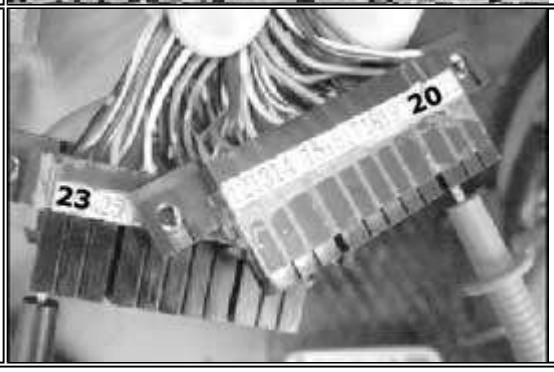
13 -Replace or fix the faulty system. Repeat the check with the menu on "ACTIVE DIAGNOSIS".	
14- Repeat the earth insulation check in the two sections. Replace or fix the wiring. Repeat the check with the menu on "ACTIVE DIAGNOSIS" H.V. coil control simulation. Delete the errors stored in memory.	
15 - Check the continuity of the H.V. coil primary. See figure. Primary resistance = 0.5?8% YESgo to 16 NOgo to 19	

	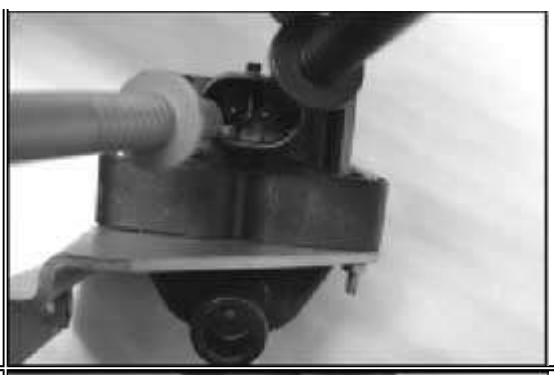
16 -Check the earth insulation of the primary circuit Measure between one of the primary terminals and earth. Primary-earth = Ω infinity (>1MΩ) YESgo to 17 NO go to 19	
17 -Check the secondary resistance. Measure the resistance between one of the primary terminals and the spark plug cable output. Primary-HV cable output = 3.1K?9% YESgo to 18 NOgo to 19	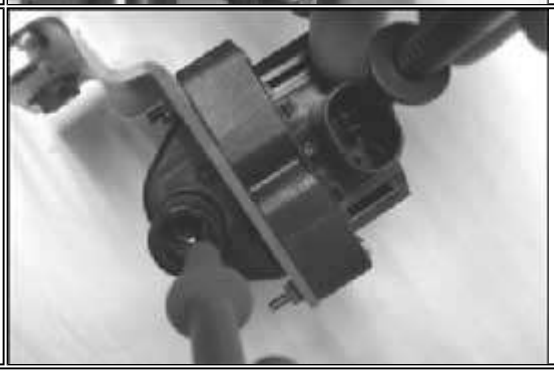
18- The coil is conforming.	
19 -Replace the coil	

Measure the screened cap resistance. **Resistance = 5 KΩ** If different values are measured (<1; >20KΩ), replace the screened cap.	

NOTE

An unscreened cap or spark plug can affect the injection system.

For further information on the spark plug,see[01]Characteristics **and** **[03] Maintenance**

The ignition advance is electronicallydetermined on the basis of the parameters recognised by the controller. Forthis reason it is not possible to declare the reference values based on theengine rpm.
The ignition advance value is detectable any timeby the diagnostic tester dwg. 020460Y.
Using the stroboscopic lamp dwg. 020330Y it ispossible to check whether the ignition advance determined by the injectionsystem matches that actually started on the engine.

Proceed as follows: - Remove the transmission compartment cover as described in the Automatic transmission	
- Remove the TDC reference inspection cap between flywheel and cover housing. See the [1005] Flywheel cover	
- By the driving pulley, turn the engine to find the alignment of the references to identify the TDC.	
- Repeat for the reference between driving pulley and engine crankcase. See figure	
- Replace the inspection cap on the flywheel side.	

- Connect the diagnostic tester dwg. 020460Y. - Start the engine. - Select the menu on the "parameters" function. - Select the stroboscopic lamp control in the conventional 4-stroke engine position (1 spark 2 revolutions). - Check that the real values of rpm and ignition advance match those measured by the diagnostic tester.	

-If the values do not match, check:

- timing
- stroke-revolution sensor

?φοντσιζε=1 φαχε=∀Τιμεσ Νεω Ρομαν∀> injectioncontroller

TERMINALS	CONDITIONS	STANDARD
4 - 22	cooling fluid temperature	With connected sensor 20?= 2500 ? 100 Ω 80?= 308 ?6 Ω

Circuitlayout

1	CONTROLLER	3	AIR TEMPERATURE SENSOR
2	VALVE POSIT. SENSOR	4	FLUID TEMPERATURE SENSOR

The cooling fluid temperature sensor isinstalled on the engine head and provides the indications for the digitalinstrument and for the injection.
It is realised with two electrically differentsections.
The injection section is realised with an NTCsensor connected to a 5V powered circuit. The resistance variation causes avariation of the circuit voltage. Such voltage is combined with a temperaturevalue.
By this value, the controller can manage theengine operation, optimising it for all temperatures.
A failure of this circuit causes the switchingon of the injection indicator and the tripping of the safeties (among which theelectric fan continuous start). In these conditions, the engine works, even thoughnot in an optimum way, always safeguarding the catalytic converter integrity.
A false temperature value that falls within therange of possible temperatures is a failure very difficult to manage. This cancause a failure of the safeties and an improper management of the carburetion.Such failure is more easily detected upon he engine start-up.
To check the sensor and the relevant circuit,proceed as follows:

1 - Connect the injection diagnostic tester dwg. 020460Y and select the menu on the "errors" function. Check whether there are any indications regarding the cooling fluid temperature sensor. YESgo to 3 NOgo to 2
2 -The EMS system has received no indications of temperatures out of the range of possible temperatures. If you suspect a wrong temperature indication, proceed to perform the following check. **NOTE: a wrong temperature signal can be detected by coupling the analogue instrument indication with the electric fan start.** **In any case, before checking the sensor, check the filling and bleeding of the cooling system.**
3 -Before checking the sensor and the relevant circuit, wait until the engine has cooled down and the vehicle has set to the working area temperature. YESgo to 4
4- Set the switch to "ON" with switch to "RUN" and side stand raised. Select the menu on the "parameters" function. Do not start the engine. YESgo to 5
5 -Check the following values: cooling fluid temperature sucked air temperature ambient temperature The three indications are equal or they are slightly different (e.g. 1?C). YESgo to 6 NOgo to 7
6 -The temperature sensor is providing an incorrect information. Check at ~80?C.
7- Install the specific tool dwg. 020481Y. Do not connect the controller connector. YESgo to 8
8-Disconnect the cooling fluid temperature sensor connector. Measure the sensor resistance

between the terminals shown in the figure. Check that the resistance matches the values declared according to the temperature. TEMPERATURE RESISTANCE 9,6KW. -10degree C 5,975KW. 0 3,81KW. +10degree C 2,5KW. +20degree C 1,68KW. +30degree C 0,3KW. +80degree C YESgo to 10 NOgo to 9	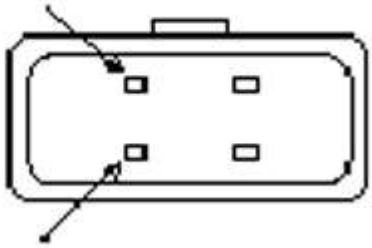
9 -Replace the sensor.	
10 -Connect the sensor connector and repeat the resistive check at terminals 4 and 22; 4-22 = Resistance equal to the value directly detected at the sensor. YESgo to 13 NOgo to 11	
11 -If slightly higher values are detected, check the connectors. If infinite resistance is detected (>1MW) check the continuity between the two lines with disconnected connectors. Blue-white-4 = 0W . (continuity) Light blue-green-22 = 0W . (continuity) YESgo to 12	
12 -Replace or fix the wiring. YESgo to 10	
13 ?Check that the sensor circuit is earth insulated. 4-23 = W infinity (>1MW.) 22-23 = W infinity (>1MW.) YESgo to 15 NOgo to 14	

14 -Replace or fix the wiring. Check the gas valve position and the air temperature lines. YESgo to 13	
15- Connect the specific tool dwg. 020481Y to the controller. Set the switch to "ON" with switch to "RUN" and side stand raised. YESgo to 16	
16 - Measure voltage at terminals 4 and 22; 4-22 = V TEMPERATURE VOLTAGE X V -10degree C X V 0 X V +10degree C X V +20degree C X V +30degree C X V +80degree C YESgo to 21 NOgo to 17	
17 -Measured value = 5+- 0.2 V Repeat the wiring and sensor continuity checks. YESgo to 18	
18-Measured value = 0 V Repeat the sensor and circuit earth insulation check. SIgo to 19 NOgo to 20	
19 -Check the controller connection connector. Check the controller power supply. Replace the controller, if necessary.	
20 -Replace or fix the wiring.	

21 -Start the engine and check that voltage decreases gradually according to the temperature increase as per table. SIgo to 22 NOgo to 23	
22-The temperature signal is conforming.	
23- Replace the temperature sensor.	
NOTE For a more accurate check of the sensor, remove it from the engine and check its resistance at controlled temperature. Using a suitable container, immerse the metal portion of the sensor in water, heat gradually and read the temperature and resistance values. Check the matching as per table	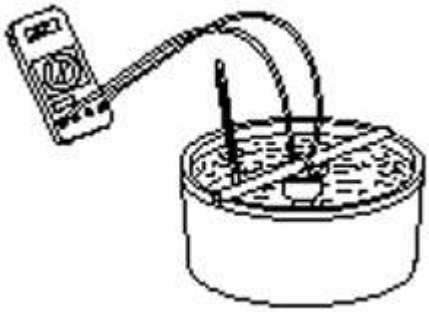

TERMINALS	CONDITIONS	STANDARD
18 - 22	sucked air temperature 20degree	With connected sensor 3750 +-200 Ω

Circuitlayout

1	CONTROLLER	**3**	AIR TEMPERATURE SENSOR
2	VALVE POSIT. SENSOR	**4**	FLUID TEMPERATURE SENSOR

The sucked air temperature sensor is installedin the bottom side of the throttle body on the filter box side.
The sensor is an NTC and has the same functionallayout as the cooling fluid temperature sensor.
This signal is used to optimise the engine performance.Anyway, this data is less important than the cooling fluid temperature signal.
A failure of this circuit causes the controllerto turn on the injection indicator starts the safety control, thereby ensuringthe engine operation.
To check the sensor and the relevant circuit,proceed as follows:

1- Connect the diagnostic tester dwg. 020460Y Select the menu on the "ERRORS" function. Check whether there are any indications regarding the sucked air temperature sensor. YESgo to 3 NOgo to 2	
2 -The EMS system has received no indications of temperatures out of the range of possible values. If you suspect a wrong temperature indication, check as follows.	
3 -Before checking the sensor and the relevant circuit, wait until the engine has cooled down and the vehicle has set to the working area temperature. YESgo to 4	
4- Set the switch to "ON" with switch to "RUN" and side stand raised. On the diagnostic tester, select the "parameters" menu. YESgo to 5	
5 -Check the following values: cooling fluid temperature sucked air temperature ambient temperature indicated by the digital instrument. The three indications are equal or they are slightly different (e.g. 1degreee C). YESgo to 6 NOgo to 7	
6 -The sucked air temperature sensor is providing an incorrect information.	
7-Install the specific tool dwg. 020481Y. Do not connect the controller connector. YESgo to 8	
8 -Disconnect the sucked air temperature sensor connector. Measure the resistance between the sensor terminals. Check that the resistance matches the values declared according to the temperature. TEMPERATURE	

RESISTANCE 9,6 K -10degree C 5,975 K. 0 degree 3,81 K. +10degree C 2,5 K. +20degree C 1,68 K.+30degree C YESgo to 10 NOgo to 9	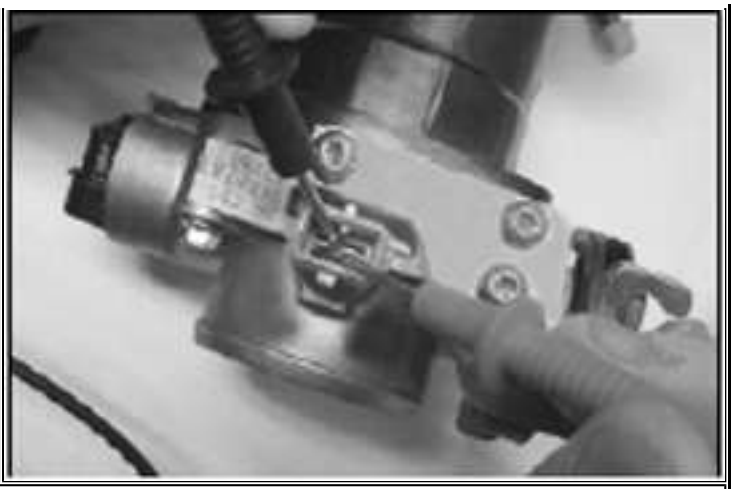
9 -Replace the sensor.	
10 -Connect the sensor connector and repeat the resistive check at terminals 18 and 22. 18-22 = Resistance equal to the value directly detected at the sensor. YESgo to 13 NOgo to 11	
11 -If slightly higher values are detected, check the connectors. If infinite resistance is detected (>1MW) check the continuity between the two lines with disconnected connectors. Grey-white-18 = 0 W (continuity) Light blue-green-22 = 0 W (continuity) YESgo to 12	
12 -Replace or fix the wiring. YESgo to 10	
13 -Check that the sensor circuit is earth insulated. 18-23 = W infinity (>1MW) 22-23 = W infinity (>1MW) YESgo to 15 NOgo to 14	

14 -Replace or fix the wiring.
Check the valve position and the fluid temp. lines.
YESgo to 13

15- Connect the specific tool dwg. 020481Y to the controller.
Set the switch to "ON" with switch to "RUN" and side stand raised.
YESgo to 16

16- Measure voltage at terminals 18 and 22.
18-22 = V as per table.
TEMPERATURE VOLTAGE
XXX V -10degree C
XXX V 0
XXX V +10degree C
XXX V +20degree C
XXX V +30degree C
YESgo to 21 NOgo to 17

17 -Measured value = 5 ?0,2V
Repeat the wiring and sensor continuity checks.
YESgo to 18

18 -Measured value = 0 V
Repeat the sensor circuit earth insulation check.
YESgo to 19 NOgo to 20

19 -Check the controller connection connector.
Check the controller power supply.
Replace the controller, if necessary.

20 -Replace or fix the wiring.

21 -Start the engine and check that voltage decreases gradually according to the air filter box temperature increase.
NOTE: With mild weather, 30degree C can be easily reached after a few minutes of stop with idle engine.

This sensor does not have a system since it isdirectly installed into the controller.
The sensor allows the controller to optimise theengine performance based on altimetric variations.
To check the sensor, proceed as follows:

1 - Connect the diagnostic tester dwg. 020460Y. Select the menu on the "ERRORS" function. Check whether there are any indications regarding the pressure sensor. YES go to 2 NO go to 3	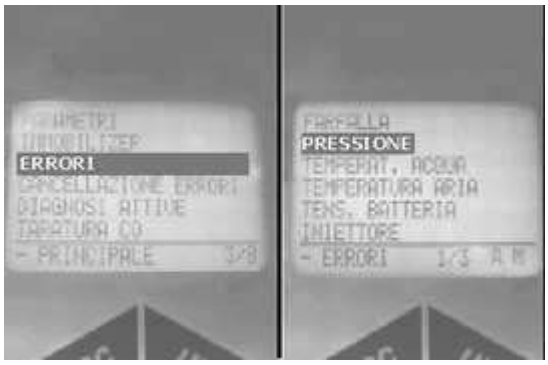
2 -Replace the injection controller.	
3 - Select the menu on the "parameters" function. Check that the pressure value in mm/Hg matches that of another vehicle or of an external barometer. Max error: +-20 mmHg YES go to 4 NO go to 5	
4 -The ambient pressure signal is correct.	
5 -Replace the injection controller.	

TERMINALS	CONDITIONS	STANDARD
1 - 22	Switch set to "ON"	5 V
11 - 22	Opening the gas gradually	Volt= Progressive increase

Circuit layout

1	CONTROLLER	3	AIR TEMPERATURE SENSOR
2	VALVE POSIT. SENSOR	4	FLUID TEMPERATURE SENSOR

The gas valve position sensor is not removableand is installed on the throttle body.
This sensor receives a 5-V power supply from thecontroller and transmit a gradually increasing voltage to the same, with anincrease of the gas valve opening. The controller converts this voltage at anangular position of the valve.
The engine rpm and the gas valve position arethe two basic signals for the engine management.
A failure of this circuit causes the switchingon of the injection indicator and the tripping of the safeties. In theseconditions, the engine works, even though not in an optimum way, alwayssafeguarding the catalytic converter integrity.
The gas valve position signal is especiallyimportant at the small valve openings. These areas are also where the sensorworks more frequently, and therefore they require more frequent checks after ahigh number of kilometres run.

1- Connect the diagnostic tester dwg. 020460Y. Set the switch to "ON" with switch to "RUN" and side stand raised. Select the tester menu on the "ERRORS" function. Check whether the controller has detected any failures relating to the gas valve position signal. YESgo to 6 NOgo to 2	
2- Select the diagnostic tester menu on the "parameters" function. Check whether the controller recognises the extreme positions: gas valve to minimum gas valve to maximum YESgo to 4 NOgo to 3	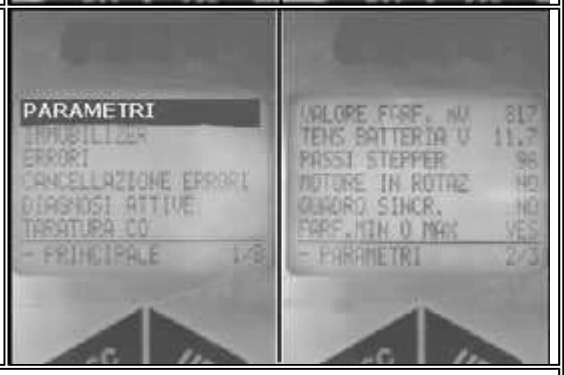
3 -Check the adjustment of the gas valve control flexible transmissions. Fix or replace, if required. YESgo to 2	
4 -Gradually open the throttle valve, check that the mV value increases progressively and proportionally with the opening variation. YESgo to 5?NOgo to 6	
5-The gas valve position signal is conforming.	
6- Connect the specific tool dwg. 020481Y to the injection system. Do not connect the tool to the controller. Disconnect the gas valve position sensor connector. Check the continuity between the connector's terminals and the relevant pins on the controller. Light blue ?green -22 = 0 Ω (continuity) Brown-yellow-1 = 0 Ω (continuity) Orange-light blue-11 = 0 Ω (continuity)	

YESgo to 8?NOgo to 7

7 -Replace or fix the injection wiring.
YESgo to 6

8 -Check the earth insulation of the three circuit lines.
22-23 = Ω infinity (>1M)
1-23 = Ω infinity (>1M)
11-23 = Ω infinity (>1M)
YESgo to 10 NOgo to 9

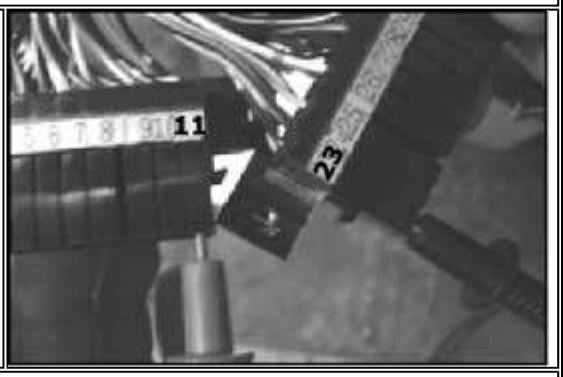

9 -Replace or fix the injection wiring
YESgo to 8

10- Connect the specific tool dwg. 020481Y to the controller.
Set the switch to "ON" with switch to "RUN" and side stand raised.
Measure voltage between terminals 1 and 22 of the specific tool.
1-22 = 5+-0.2 V
YESgo to 12 NO go to 11

11 -Check the controller connection connector.
Replace the controller, if necessary.
YESgo to 10

12- Connect the gas valve position sensor connector.
Repeat the voltage measurement between terminals 1 and 22 of the specific tool.
1-22 = 5 +- 0.2 V
YESgo to 13 NOgo to 14

13- Measure voltage between terminals 11 and 22. Gradually open the throttle valve and check that the voltage value increases progressively.
11-22 = V (progressive variation)
NOTE:by way of an indication, voltage may vary from ~700mV at minimum, and above 4V at maximum.
The possible variations of the limit values are caused by the sensor installation tolerances.

YESgo to 15 NOgo to 14	
14 -Replace the throttle body along with sensors and stepper. YESgo to 12	
15 -Check that the voltage measured at pins 11 and 22 matches that indicated by the diagnostic tester set to "parameters". YES go to 16 NOgo to 17	
16-The gas valve position sensor and relevant circuit are conforming.	
17 -Replace the controller.	

The throttle body is supplied with gas valveposition sensor and is pre-calibrated.
Pre-calibration consists in the adjustment ofthe minimum gas valve opening, to obtain a fixed air capacity in predeterminedreference conditions.
Pre-calibration allows an optimum air rate foridle management.
Thisadjustment must not be changed.
The injection system will complete the idlemanagement by the stepper and the ignition advance variation.
After pre-calibration, the throttle body has thevalve open with an angle that may vary according to the valve and duct workingtolerances.
In turn, the valve position sensor may takedifferent installation positions. For these reasons, the mV of the sensor withvalve at minimum value may vary for different throttle bodies.
For optimum carburetion, especially with smallopenings of the gas valve, it is necessary to match the throttle body with thecontroller according to the procedure called TPS.
This operation allows setting the mV value inthe controller as starting point corresponding to the pre-calibration position.The controller will recognise such value as angle 5.24degree
To reset, proceed as follows:

Connect the diagnostic tester dwg. 020460Y. (see page 9-17). Set the switch to "ON" with switch to "RUN" and side stand raised.	
Select the diagnostic tester menu functions on "TPS reset".	
Check that the gas valve has the control abutted against the abutment screw.	
In this position, confirm the TPS reset procedure.	
Select the "parameters" function and check that the TPS reset "YES" is displayed.	

Reset should be performed in the followingcases:
- upon the first assembly
- in case of replacement of the throttle body
- in case of replacement of injectioncontroller.

NOTE

TheTPS reset procedure must not be carried out with old throttle bodies since thepossible valve and abutment wear make the air flow rate different from that ofpre-calibration.

Circuit layout

1	Controller	2	Stepper

The throttle body is provided with an auxiliaryair circuit. This is enabled by a piston valve controlled by a stepper motor.
The stepper is powered by the controller onlywhen the opening must be changed.
The revolution is divided into portions called"steps".
By changing the opening "steps" it ispossible to properly feed the engine to facilitate the start-up procedure andadjust the air feeding with cold engine.
When the engine reached the working temperature,the stepper partly closes again.
To prevent wear of the adjustment piston,operation at full speed is obtained with a minimum opening of about 20"steps".
To recover possible adjustments, every switchingto "OFF" causes the piston to close up to end of travel and to openup again by a fixed number of steps (self-reset).
When the controller changes the stepper opening"steps" it also changes the injection time to ensure propercarburetion.
Idling speed stabilises at 1450?0 G/1'. After ahot start-up step you can perceive the first increase in the revolutions andthe subsequent closing of the stepper to stabilise the speed.
In case of irregular speed, before carrying outelectric checks inspect the gas valve and the auxiliary air circuit cleaning.
To check the stepper and the relevant circuit,proceed as follows:

1- Connect the diagnostic tester dwg. 020460Y. Set the switch to "ON" with switch to "RUN" and side stand raised. Lift the vehicle on the central stand. Select the menu on the "ERRORS" function. Check whether the controller has detected any failures relating to the stepper circuit. YESgo to 8 NOgo to 2	
2 - Select the menu on the "parameters" function. Check the number of "steps" programmed by the controller to obtain start-up. This setting is a function of the engine temperature. 20degree C = ~ 80~90 steps YESgo to 3 NOgo to 4	
3- Start the engine and let it warm up. With a cooling fluid temperature of more than 70 degree, the controller must control the stepper wit about 20 "steps". YESgo to 5 NOgo to 4	
4-Check the cooling fluid temperature sensor signal. Check the controller, if necessary.	
5 - Select the menu on the "active diagnosis" function. Select "stepper" diagnosis. Start the diagnosis with idle engine at the working temperature. Check whether the stepper	

commands some revolution variations and wait for the diagnostic tester response. YESgo to 6 NOgo to 8	
6 - Test successful. Variations of revolutions perceived. YESgo to 7?NOgo to 9	
7 - Stepper and relevant circuit efficient.	
8 - Test failed. No variations of revolutions. Check the stepper circuit. Disconnect the stepper connector. Check the stepper circuit resistance connecting the tester as shown in the figure. The two measurements must give the same value. Resistance = ~ 51 W YESgo to 11 NOgo to 10	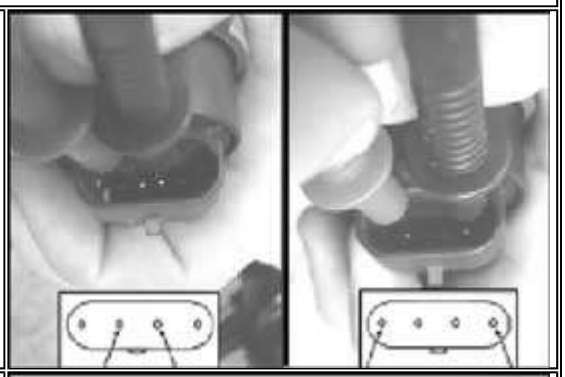
9 - Test successful. No variations of revolutions. Remove the throttle body. Check the auxiliary air circuit cleaning. Switch from "ON" to "OFF" and again to "ON" and check whether the piston valve moves. If the valve does not move, replace the throttle body.	
10 -Replace the throttle body.	
11- Connect the specific tool dwg. 020481Y. For these checks, do not connect the specific tool to the controller. Check the continuity of the 4 power supply lines of the stepper. A Light blue-red-14 = 0 Ω (continuity) B Orange-blue-6 = 0 Ω (continuity) C Light blue-yellow-21 = 0 Ω (continuity) D Light blue-black-24 = 0 Ω (continuity) YESgo to 12 NOgo to 13	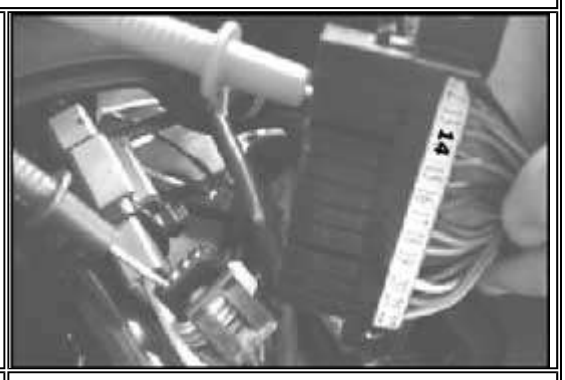
12 -Check the earth insulation of the 4 stepper lines 14-23 = >1MW (infinity) 6-23 = >1 MW (infinity) 21-23 = >1 MW (infinity) 24-23 = >1 MW (infinity) YESgo to 14 NO go to 13	

13 -Replace or fix the wiring. YESgo to 11	
14- Connect the stepper connector. Repeat the continuity check with the tool pins. 14-24 = ~ 51 Ω 6-21 = ~ 51 Ω YESgo to 16 NO go to 15	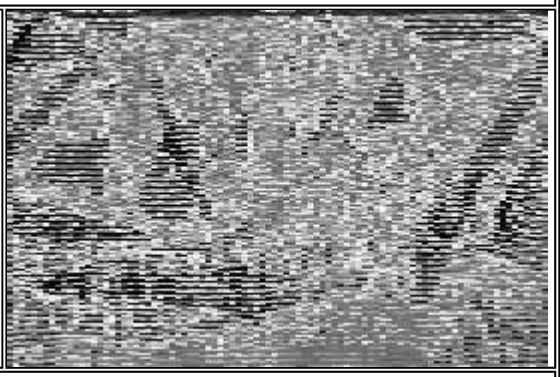
15 -Check wiring and connectors more carefully.	
16- Connect the controller connector. Set the switch to "ON" with switch to "RUN" and side stand raised. Repeat the "ON" "OFF" "ON" switching. Check the presence of voltage pulses on the stepper command lines. Setup for direct voltage measurements. 14-24 = V (pulses for a few seconds) 6-21 = V (pulses for a few seconds) NOTE: pulses are used to change the stepper position. After reaching the optimum position, the power supply voltage becomes null. YESgo to 17 NOgo to 18	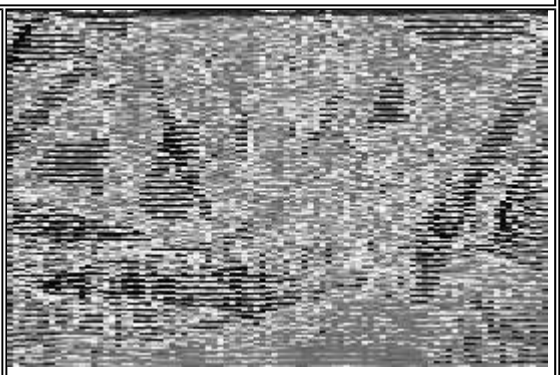
17- The stepper circuit is efficient.	
18 -Check the controller connection connector. Replace the controller if needed.	

The injection system controller is programmed toensure optimum carburetion on the road.
Idle carburetion requires adjustment tocompensate the manufacture tolerances and the engine adjustments.
This adjustment is carried out by changing theinjector opening time with idle engine.
To adjust, proceed as follows:

1 -Idle carburetion adjustment must be carried out on properly setup engine. The following should be checked first: - spark plug -air filter -good intake system seal -good exhaust system seal -valve clearance -fuel filter fuel pressure YESgo to 2	
2 -Pre-heat and check the reset of the analyser for exhaust gases, dwg. 494929. Remove the cap from the exhaust manifold and connect the extension to the union socket for the analyser pipe. YESgo to 3	
3- Connect the diagnostic tester dwg. 020460Y Set the switch to "ON" with switch to "RUN" and side stand raised. YESgo to 4	
4- Select the menu on the "ERRORS" function. Check whether there are any failures. YESgo to 6 NOgo to 5	
5- Select the menu on the "PARAMETERS" function. YESgo to 7	
6 -Fix the wiring according to the instructions provided. YESgo to 4	
7 -Start the engine and let it warm up to obtain the following conditions: - cooling fluid temperature = above 70 degree - sucked air temperature = 25 ~ 30 degree YESgo to 8	
8-Start the exhaust gas analyser and check the following conditions: - CO = 1.25+- 0.25% - CO2 = 14.50+- 1.0% YESgo to 9 NOgo to 10	
9 -Adjustment is correct.	
10- If non-conforming CO values are detected, adjust the injection time to minimum. YESgo to 11	
11- Select the diagnostic tester menu on the "CO CALIBRATION" function. Start the adjustment function. YESgo to 12	
12 -The display reads	

"TRIMMER VALUE".
The numerical value can be positive or negative.
YESgo to 13

13 -To increase the CO it is necessary to increase the injection time.
To decrease the CO it is necessary to decrease the injection time.
Adjust the trimmer value according to the information provided in the table:
YESgo to 14

TRIMMER VALUE	INJECTION TIME	C O
+100	HIGH	INCREASES
+ 50	?	?
+ 10		
0	LOW	
- 10		
- 50	?	?
-100	MEDIUM	DECREASES

NOTE: The trimmer value 0 corresponds to the mean injectiontime.
After adjustment, engines may have carburetionboth with positive and negative trimmer values.
This is due to the normal manufacturetolerances.

14 -After changing the trimmer, wait for the CO value to adjust.
When adjustment is correct, press OK to store the value in the controller.
YESgo to 15

15 -Select the menu on "PARAMETERS" and on "ECU INFORMATION" to have the confirmation of the new trimmer adjustment storage.

NOTE:When the CO percentage is correct and the CO2 percentage does not fall within the prescribed values, the LAMBDA value is not correct. In this case, carefully check the exhaust system seal.
When the CO percentage is correct and the HC value (PPM) is higher than the maximum admissible value,
check
- spark plug
- valve clearance
- timing
- exhaust valve seal
If the controller needs replacement, reset the TPS and preset the trimmer value of the original controller (if available).
In any case, check the CO value again.

NOTE: When the CO percentage is correct and the CO2percentage does not fall within the prescribed values, the LAMBDA value is notcorrect.
In this case, carefully check the exhaust systemseal.
When the CO percentage is correct and the HCvalue (PPM) is higher than the maximum admissible value, check:
- spark plug
- valve clearance
- timing
- exhaust valve seal
If the controller needs replacement, reset theTPS and preset the trimmer value of the original controller (if available).
In any case, check the CO value again.

TERMINALS	CONDITIONS	STANDARD
5 - 23	Switch set to "ON" Switch to "RUN" Side stand raised Electric fan off	Battery voltage

Circuit layout

1	CONTROLLER	4	KEY SWITCH
2	ELECTRIC FAN	5	ELECTRIC FAN REMOTE CONTROL SWITCH
3	FUSE 30A		

The electric fan system is powered by a remotecontrol switch connected under the panel and interlocked to the injectioncontroller.
The injection controller manages the electricfan control according to the temperature detected on the engine.
In case of a prolonged activation of theelectric fan rotation, before checking the electric system perform thefollowing checks:
- expansion tank level
- engine connection pipe bleeding
- head output bleeding
- thermostat efficiency
- pump efficiency

For these checks, see the "Cooling"chapter.
To check the circuit, proceed as follows:

1- Connect the diagnostic tester dwg. 020480. Set the switch to "ON" with switch to "RUN" and side stand raised. Select the "ERRORS" function. Check whether the controller has detected any failures relating to the electric fan control circuit. YESgo to 8 NOgo to 2	
2- Select the menu on the "ACTIVE DIAGNOSIS" function. Start the electric fan diagnosis function. Acoustically check the electric fan rotation. Wait for the diagnostic tester results. YESgo to 3 NOgo to 4	
3 - Test successful. The fan is rotating. YESgo to 5	
4 - Test failed. The fan is not rotating. YESgo to 8 NOgo to 6	
5- The electric fan system is conforming.	
6 - Test successful. The fan failed. YESgo to 7	
7- The remote control switch circuit is efficient. Check the electric fan connection circuit, the remote control switch contacts efficiency, the positive lines, the negative line and the electric fan motor.	

8-Disconnect the electric fan remote control switch. Check the excitation coil continuity. 85 - 86 = 100 +- 50 W YESgo to 10 NOgo to 9	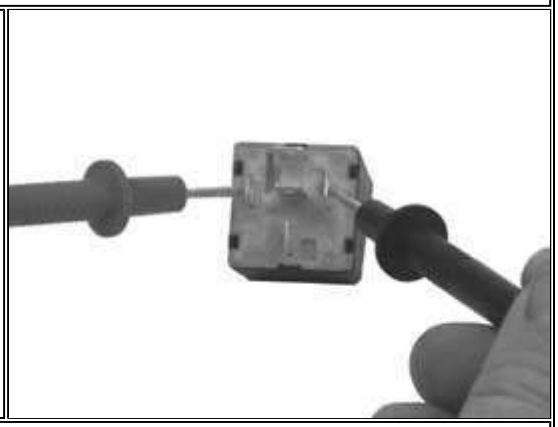
9 -Replace the remote control switch. YESgo to 8	
10- Connect the specific tool dwg. 020480Y between controller and system. Do not connect the controller. YESgo to 11	
11 -Check the presence of battery positive voltage at pin 85 of the remote control switch connector. 85 (blue/grey) - 23 = battery voltage with switch set to "ON" YESgo to 13 NOgo to 12	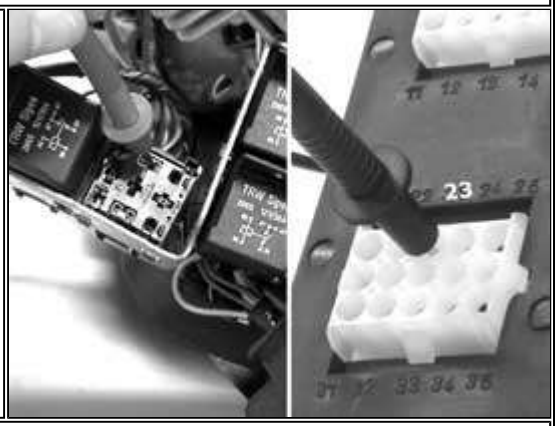
12 -Replace or fix the wiring.	
13-Keeping the remote control switch disconnected and check the continuity between pin 86 of the remote control switch connector and pin 5 of the controller. 86 (green/white) - 5 = 0W (continuity) YESgo to 14 NO go to 15	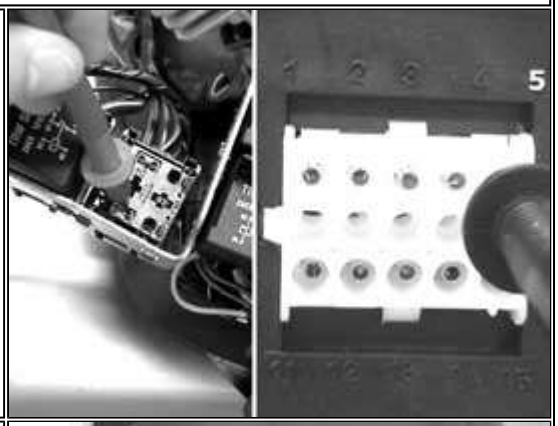
14 -Check the earth insulation. 5 - 23 > 1 MW (infinity) YESgo to 16 NO go to 15	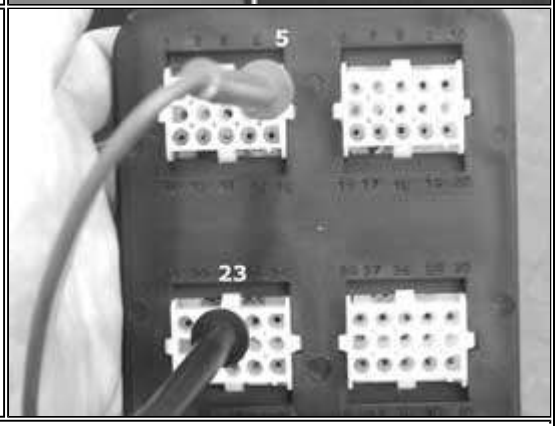

15 -Replace or fix the wiring	
16-Connect the remote control switch and check the presence of battery voltage between terminals 5 and 23 with key switch set to "ON". 5 - 23 = battery voltage with panel set to "ON" YESgo to 17	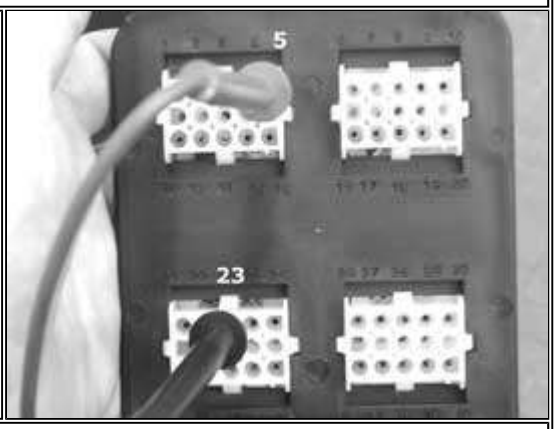
17-Repeat the check with connected controller and cold engine. 5 - 23 = battery voltage with panel set to "ON" If the fault continues, replace the controller.	

INDEX OF TOPICS

Automatic transmission.....10-2

Final reduction..... 10-22

Flywheel cover..... 10-31

Flywheel and start-up..... 10-52

Thermal unit and timing system.....10-64

Crankcase and driving shaft 10-100

Lubrication.....10-122

PGO SCOOTERS

- Loosen the 4 fastening screws. - Extract the outside plastic transmission cover.	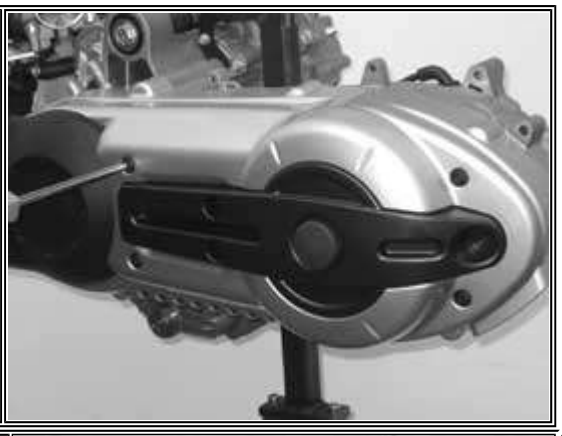
- Remove the Outside transmission cover - Unscrew the 4 fastening screws shown in the figure to remove the external air conveyor.	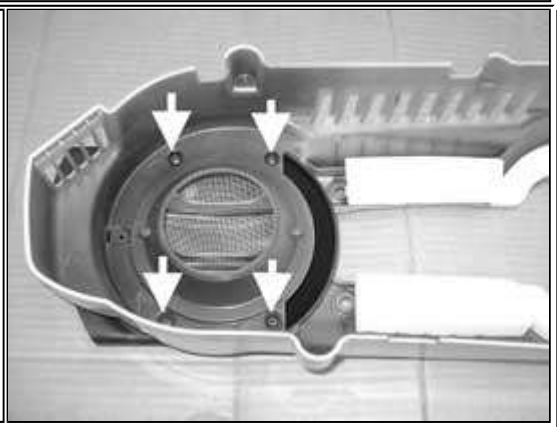
- Remove the External Air Conveyor - Unscrew the 2 fastening screws shown in the figure to remove the conveyor filter.	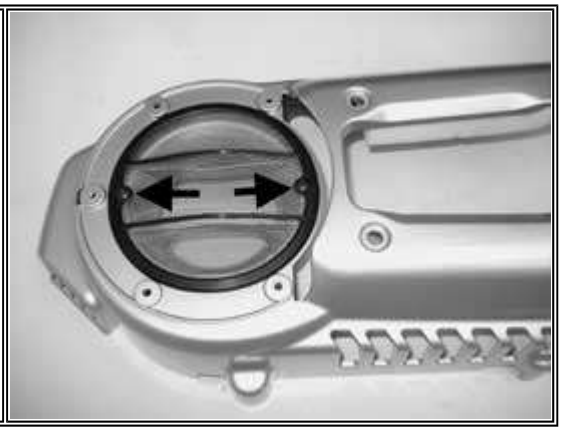

- Using a screwdriver, remove the driven pulley axle cover by the bottom of the cap.	
- Loosen the driven pulley shaft fastening nut using a misaligned wrench and prevent the pulley shaft rotation by a machine hexagon bush. - Remove the nut and the two washers.	
Note: due to the high tightening torque, using different wrenches -such as a conventional polygonal bush -may damage the hexagon obtained on the shaft or break the bush itself.	
- Remove the six M6 screws.	
- Remove the four M8 screws. - Remove the transmission cover. - Check that the bearing rotates freely, otherwise replace it.	

- Remove the Transmission cover - Unscrew the two screws shown in the figure to remove the air conveyor. Tightening torque: Air conveyor screws: 11 ~12 Nm	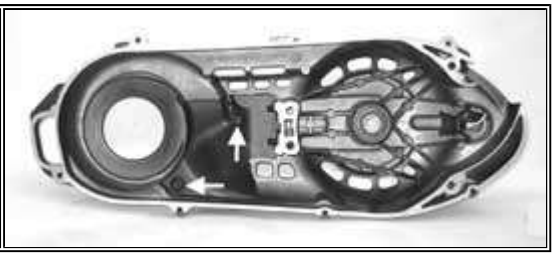

- Check that the roller is free from wear and that it rotates freely. - Remove the fastening screw by a 13-mm wrench. - Remove the roller and the bearing. N.B.: If the roller does not rotate freely, it requires replacement.	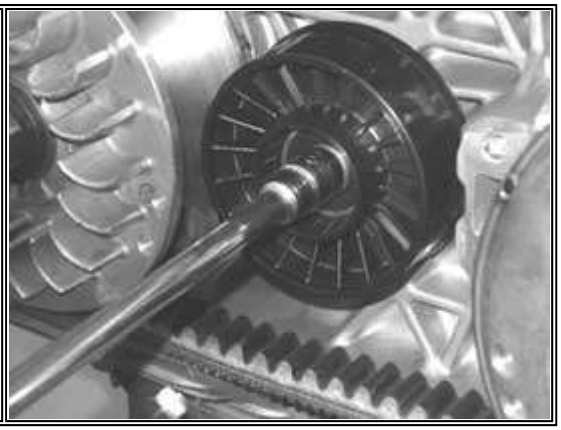

- Using a 27-mm wrench, turn the central pulley nut to horizontally align the central inside holes and install the specific tool. Specific equipment and tools: Driving pulley stop wrench 020474Y009	
- Insert the retain band of the specific tool into the pulley first, so that the groove is fully abutted. - Then, insert the tool so as to insert the stud bolts on the band into the holes obtained onto the tool itself. - Tighten the two tool fastening nuts by hand. - Loosen the central nut. - Remove the spring washer and the flat washer. - Remove the fixed driving half-pulley. - Remove the bushing connection washer.	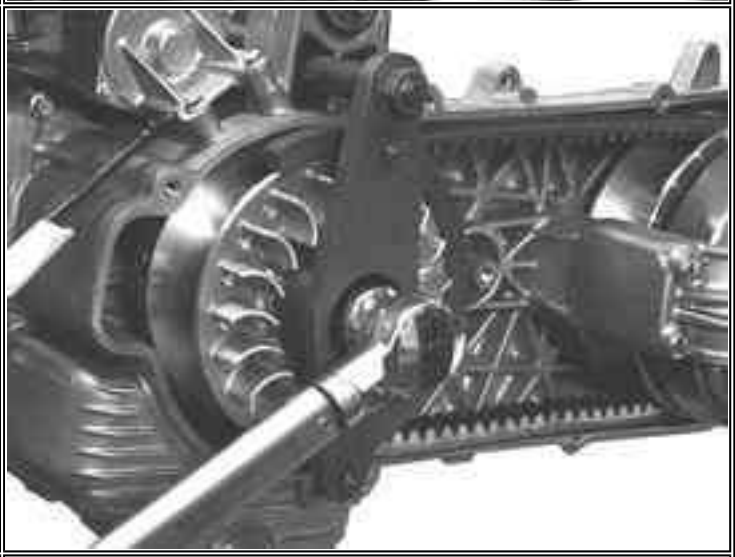
- Move the belt downwards. - Suitable support the roller contrast and extract the mobile driving half-pulley with the relevant bushing and the rear washer, being careful not to make the rollers come out.	

- Extract the clutch bell.	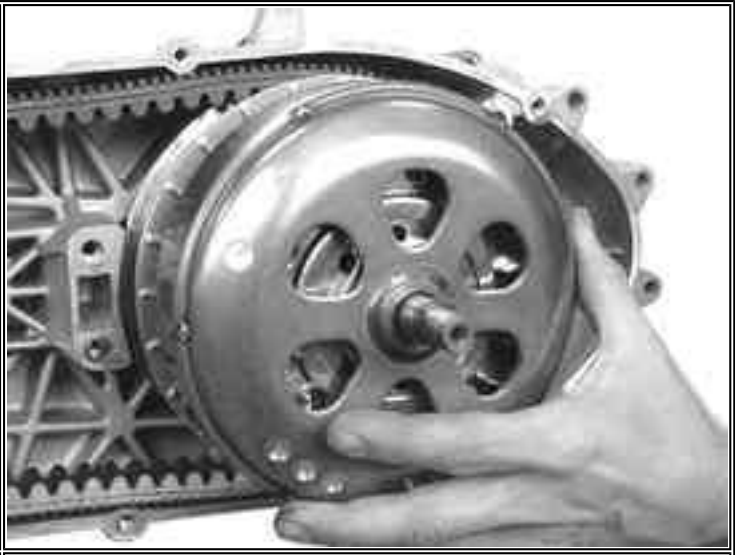
- Check that the clutch bell is not worn or damaged. - Measure the clutch bell inside diameter. Standard value: 160.2 mm Max value: 160.5 mm N.B.: Check the eccentricity measured, 0.2 mm max.	

- Extract the driven pulley unit with the belt.	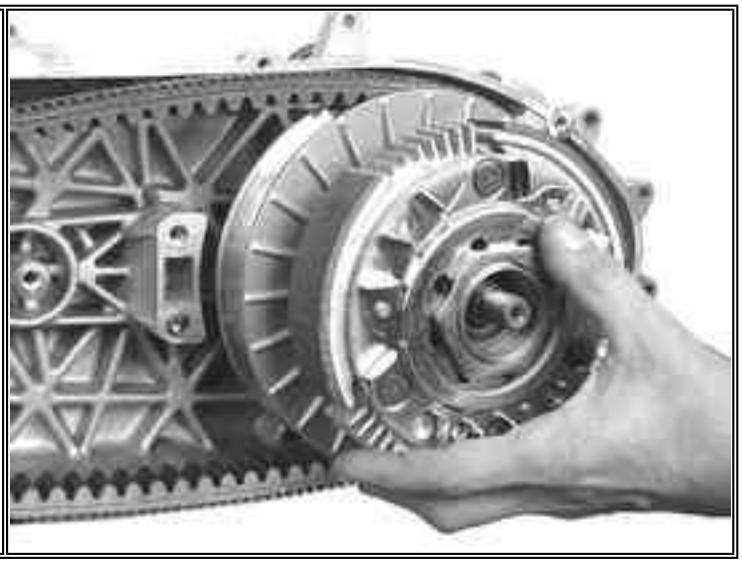

- To remove the clutch with the driven pulley it is necessary to use the specific tool dwg;
- Arrange the tool with the mean pins screwed in position "E" on the inside;
- Install the driven pulley unit onto the tool inserting the pins into the ventilation holes;
- Move the rear stop screw in abutment against the fixed driven pulley as shown in the figure.

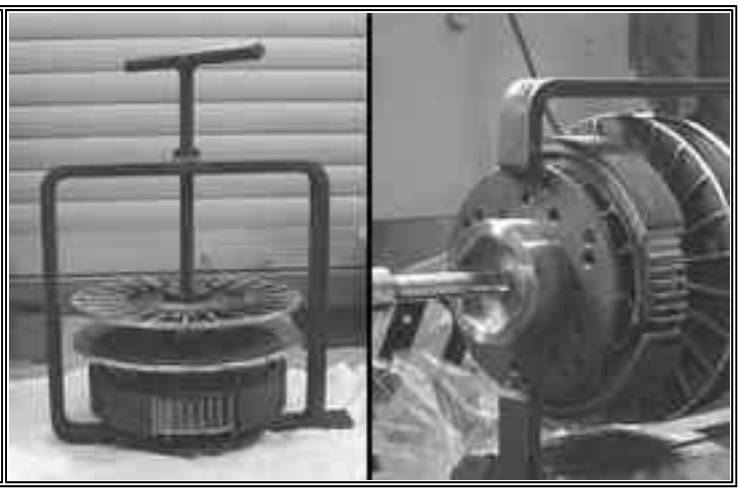

Warning: The tool should be strictly secured in a vice usingthe special tail. Do not tighten the rear screw too much as this could cause anirreversible tool deformation.
- Using the specific 55-mm wrench, remove thefastening ring nut.
- Loosen the tool screw and disassemble thedriven pulley unit, clutch, spring with sheath.

Specificequipment and tools:

Drivenpulley spring compressor: 020444Y

55-mmwrench: 020444Y009

Ring:020444Y010

-Extract the collar using 2 screwdrivers.

-Remove the 4 guide pins.
- Extract the mobile driven half-pulley.

- Check that the bushing is free from wear or damages; if so, replace the fixed driven half-pulley. - Remove the lock ring using pliers.	
- Using the specific tool inserted through the roller bearing, pull out the ball bearing. N.B.: Properly support the pulley to prevent damaging the threading. Specific equipment and tools: Handle 020376Y 24-mm adapter 020456Y 20-mm guide 020363Y	

N.B.: If you need to overhaul the bearings on an assembleddriven pulley unit, it is necessary to support the unit by the bell 001467Y002.

- Remove the roller bearing by the specific tool, supporting the fixed half-pulley with the bell. Specific equipment and tools: Handle 020376Y Adapter 28x30 mm 020375Y 25-mm guide 020364Y Bell 001467Y002	

- Check that the belt contact surface is free from wear. - Remove the 2 inside sealing rings and the 2 outside O-rings. - Measure the mobile half-pulley bushing inside diameter. Maximum admissible diameter: 50.08 mm Standard diameter: 50.085 mm	

- Install a new roller bearing by the specific tool. N.B.: Place the bearing with the writings and the embedded oil guard facing outwards. Properly support the half-pulley to prevent damaging the threading. If you are working on the driven pulley unit fully assembled, use tool 001467Y002.	

Specificequipment and tools:

Punchfor driven pulley roller casing 020478Y

Bell001467Y002

- Install a new ball bearing by the specific tool. Specific equipment and tools: Handle 020376Y Adapter 37 mm 020477Y 20-mm guide 020363Y - Insert the snap ring to lock.	

- Insert the new oil guards - Insert the new O-rings N.B.: O-rings are of two sizes. The large one is installed on the machining end radius, at the base of the half-pulley. - Install the half-pulley on the bushing being careful not to damage the top sealing ring during the introduction. - Check that the pins and the collar are free from wear; install pins and collar.	

- Using a bent beak greaser, lubricate thedriven pulley unit with about 10 gr. of grease TUTELA MRM2, this operation should be carried out through one ofthe two holes into the bushing to obtain the exit of the grease from theopposite hole. This operation is required to prevent the presence of greasebeyond the O-rings.

- Measure the free length of the mobile driven half-pulley spring. Standard length: 125.5 mm Admissible limit after use: 120 mm	
- Check the thickness of the clutch mass friction material. Minimum admissible thickness: 1 mm - The masses must exhibit no traces of lubricants; in that case, check the driven pulley unit seals.	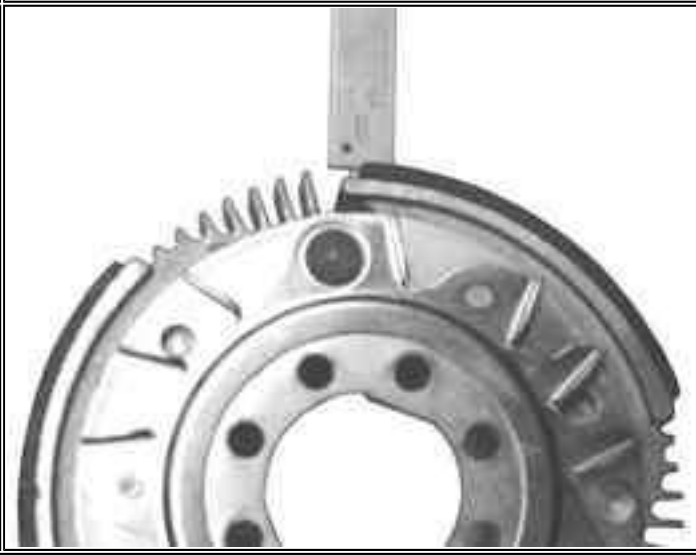
N.B.: Upon running-in, the masses must exhibit a central contact surface and must not be different from one another. Different conditions may cause the clutch tearing. - Do not open the masses using tools to prevent a variation in the return spring load.	

- Check that the driving belt is not damaged. - Check the belt width. Minimum width: 25 mm Standard width: 26.2 mm	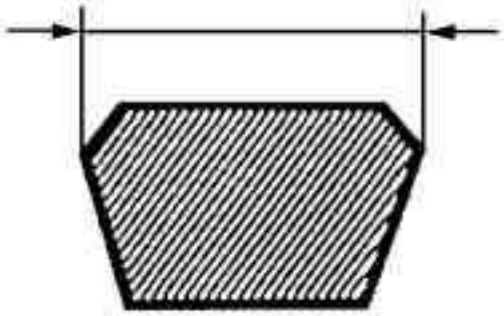

- Check that the inside brasses shown in the figure are not worn and measure the inside diameter. Maximum admissible diameter: 30.12 mm Standard diameter: 30.021 mm Caution :Do not lubricate or clean the brasses - Measure the pulley sliding bushing outside diameter shown in the figure.	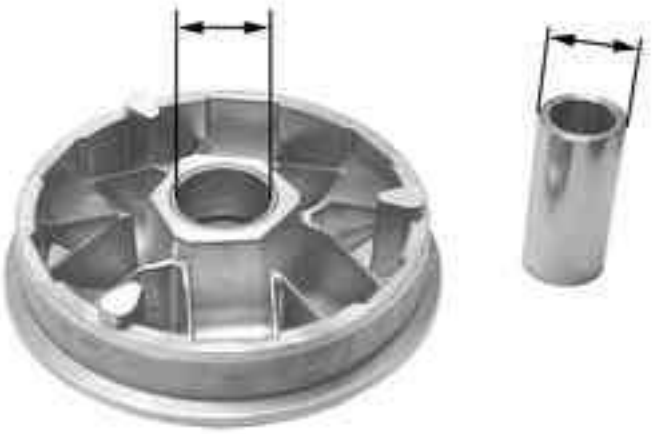
Minimum admissible diameter: 29,95 mm. Standard diameter: 29,959 mm.	
- Check that the rollers are not damaged or worn. Minimum admissible diameter: 24,5 mm Standard diameter: 24,9 mm - Check that the roller contrast plate slide blocks are not damaged. - Check the wear of the roller housings and of the belt contact surfaces on both half-pulleys.	

- Insert the spacer with the inside chamfering facing the insertion side.	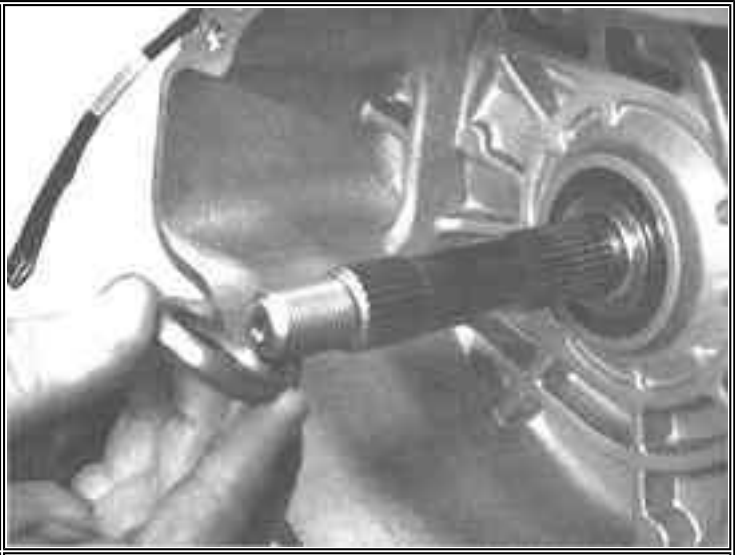
- Place the rollers into the half-pulley as shown in the figure. - The covered side must rest onto the inside thrust side of the roller container.	
- Assemble the half-pulley with the roller contrast and the sliding blocks.	
- Insert the half-pulley on the driving shaft. - Insert the spacer bushing.	

- Install the belt anti-flapping roller with the containment edge on the engine crankcase side. - Tighten the central screw at the prescribed torque. N.B.: Turn the driven and/or driving pulley to properly tension the belt.	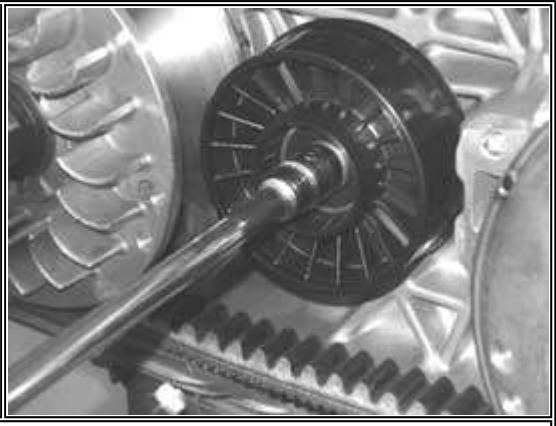
Tightening torque: Anti-flapping roller screw: 16,7 ~19,6 Nm	

- Prepare the specific tool as for removal; - Pre-assemble the driven pulley unit with the driving belt according to its direction of rotation; - Insert the driven pulley unit, the spring with sheath and clutch into the tool.	
Specific equipment and tools: **Driven pulley spring compressor 020444Y** **Adapter ring 020444Y010**	
- Compress the spring and insert the clutch on the driven pulley bushing. N.B.: Be careful not to damage the sheath or the bushing threaded end. - Tighten the ring nut by hand and complete the tightening by the specific wrench at the prescribed torque.	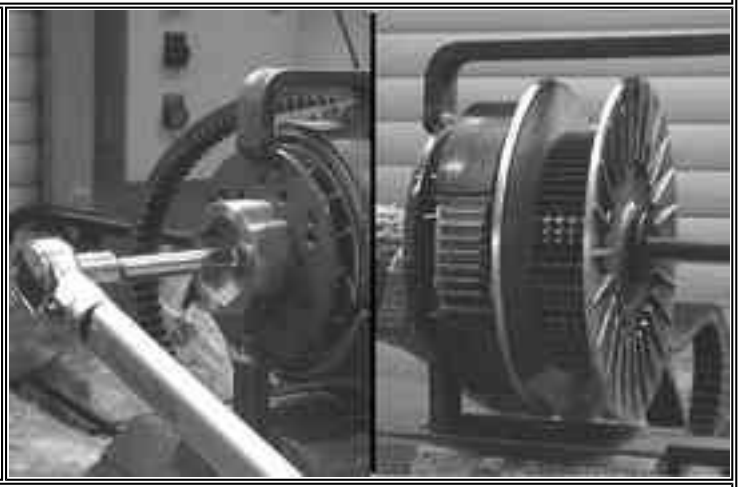
Tightening torque: Clutch ring nut: 65 ~75 Nm Specific equipment and tools: 55-mm wrench: 020444Y009	
- To facilitate reassembly on the engine, turn the mobile driven pulley and insert the belt onto the smaller diameter.	

- Insert the driven pulley unit with the belt.	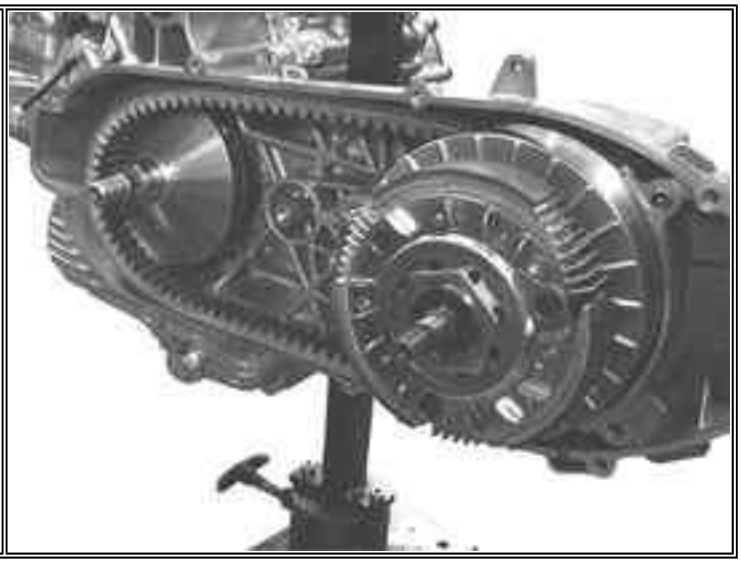

- Insert the spacer	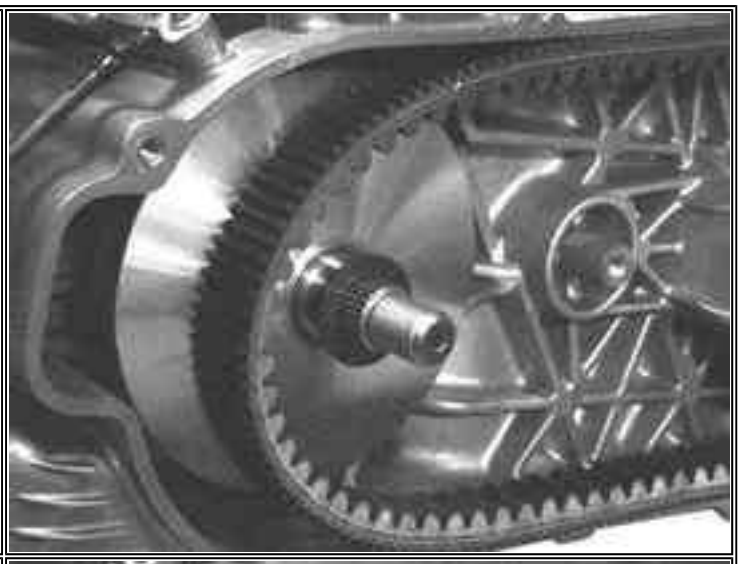
- Insert the fixed driving half-pulley and check that it is in contact with the spacer and with the mobile driving pulley sliding bushing.	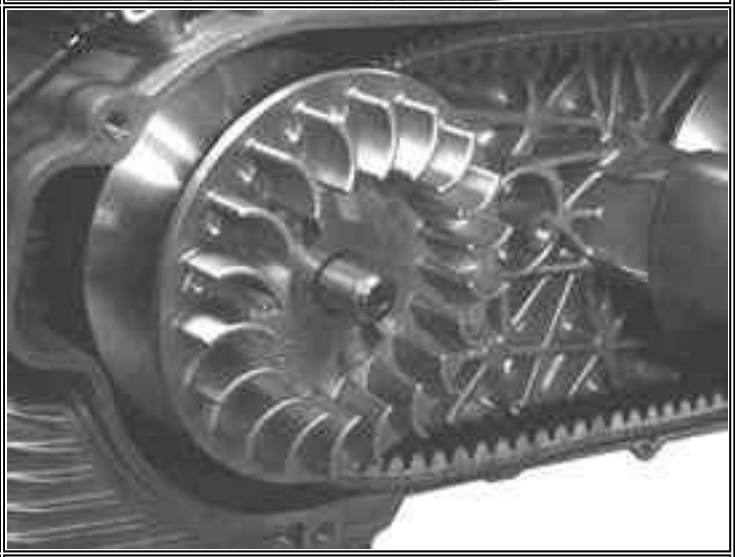
- Remove the flat washer and the spring washer as shown in the figure.	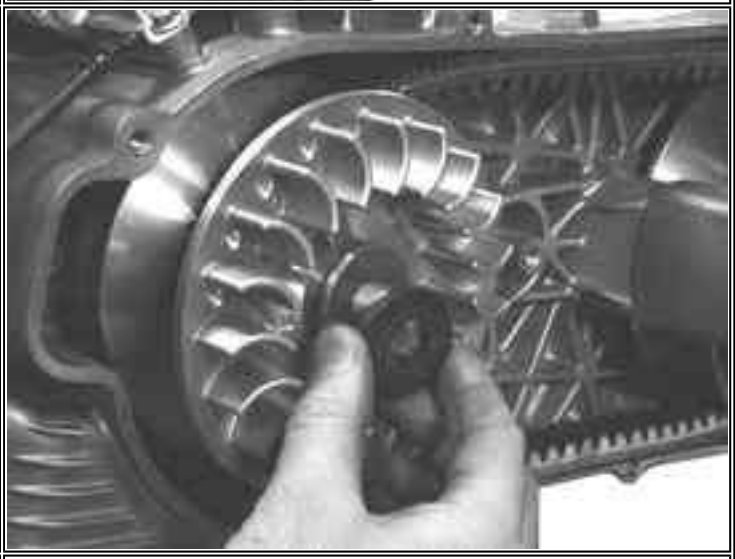
- Insert the nut in the original position (nut side in contact with the spring washer).	

	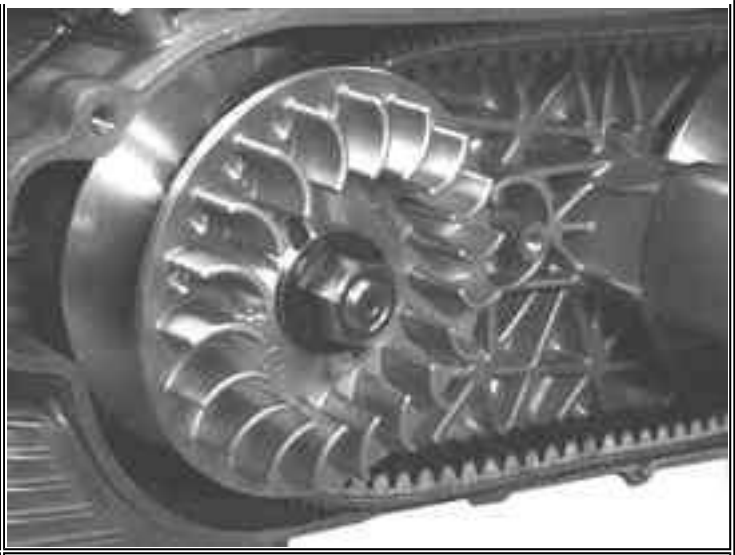
- Turn the central pulley nut to horizontally align the holes and install the specific tool. N.B.: Check that the stop wrench tool is easily inserted into the pulley and in the engine crankcase. Specific equipment and tools: Driving pulley stop wrench 020474Y004	
- Insert the retain band on the rear side, so that the groove is fully abutted. - Finally install the tool by siding the nuts by hand and ensuring the tool is resting flatly. - Tighten the driving pulley fastening nut at the prescribed torque - Remove the specific tool. Tightening torque: Driven pulley shaft nut: 160 ~175 Nm	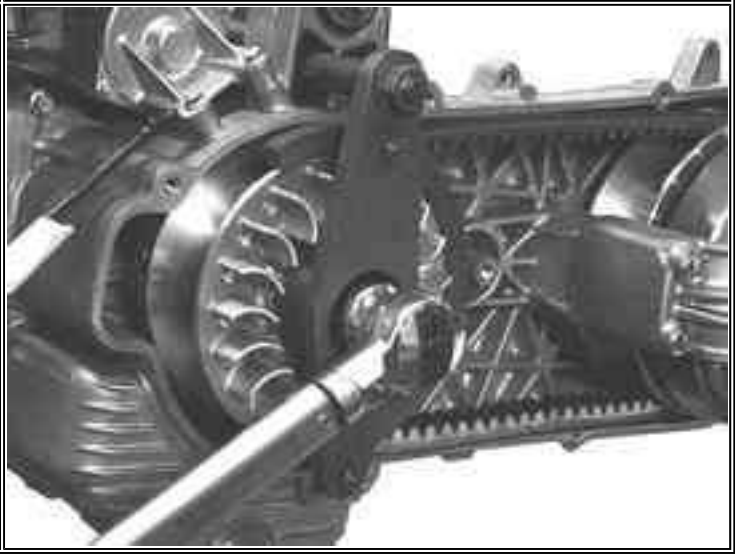

- Insert the bell and the spacer.	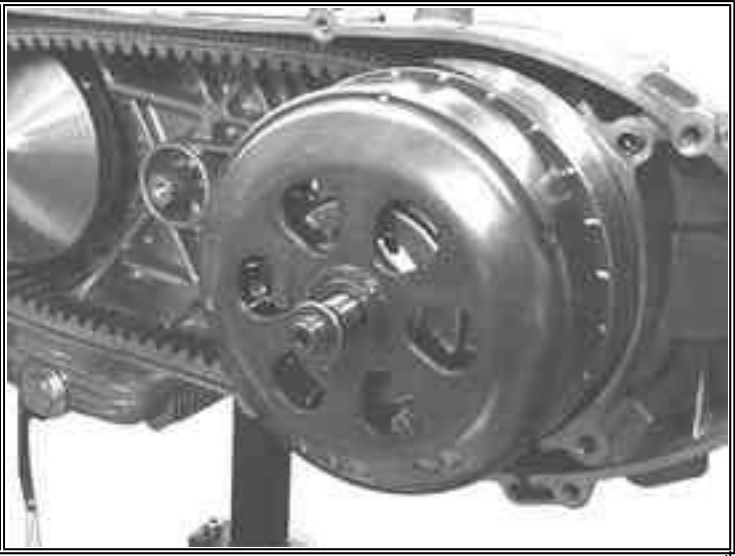

Note: due to the high tightening torque, using different wrenches -such as a conventional polygonal bush ?may damage the hexagon obtained on the shaft or break the bush itself.

- Make sure that the 2 centering dowels are properly inserted into the crankcase.	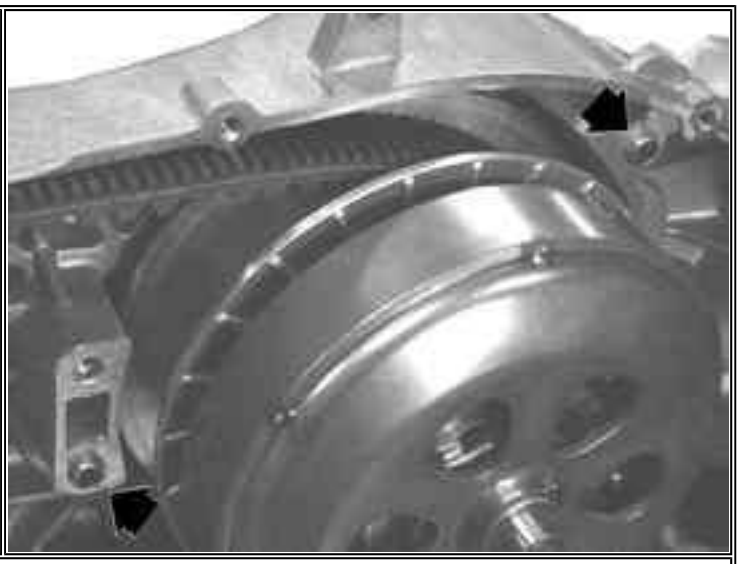
- Insert the transmission cover with the bearing and install the relevant attachments.	
- Lock the four M8 screws. Tightening torque: M8 screws: 23 ~26 Nm	
- Lock the M6 screws. Tightening torque: M6 screws: 11 ~13 Nm	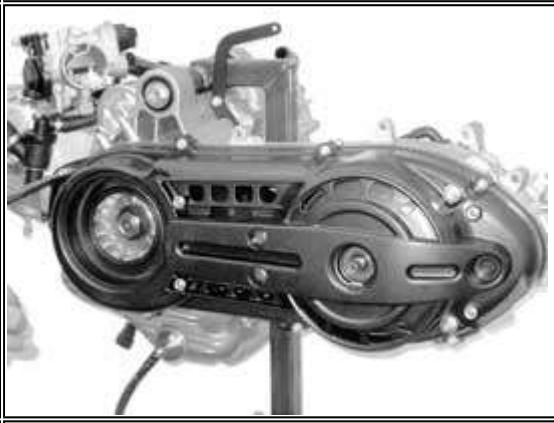
- Insert the washers on the driven pulley shaft. N.B.: Insert the larger washer first. - Insert the flanged nut. - Prepare the dynamometric wrench for LH locking using a machine hexagon wrench. - Tighten the driven pulley shaft fastening nut using a misaligned wrench. Tightening torque: Driven pulley nut: 92 ~ 100 Nm	

- Insert the driven pulley axle cap by placing the missing tooth in the low part at the reference on the transmission cover.	
N.B.: Check that the air inlet and the air outlets are totally free. - Insert the outside plastic transmission cover. - Tighten the 4 fastening screws at the prescribed torque. Tightening torque: Outside transmission cover screws: **7~9** Nm	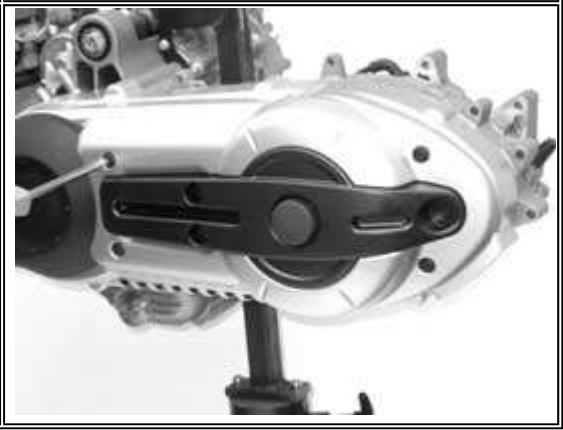

FINAL REDUCTION

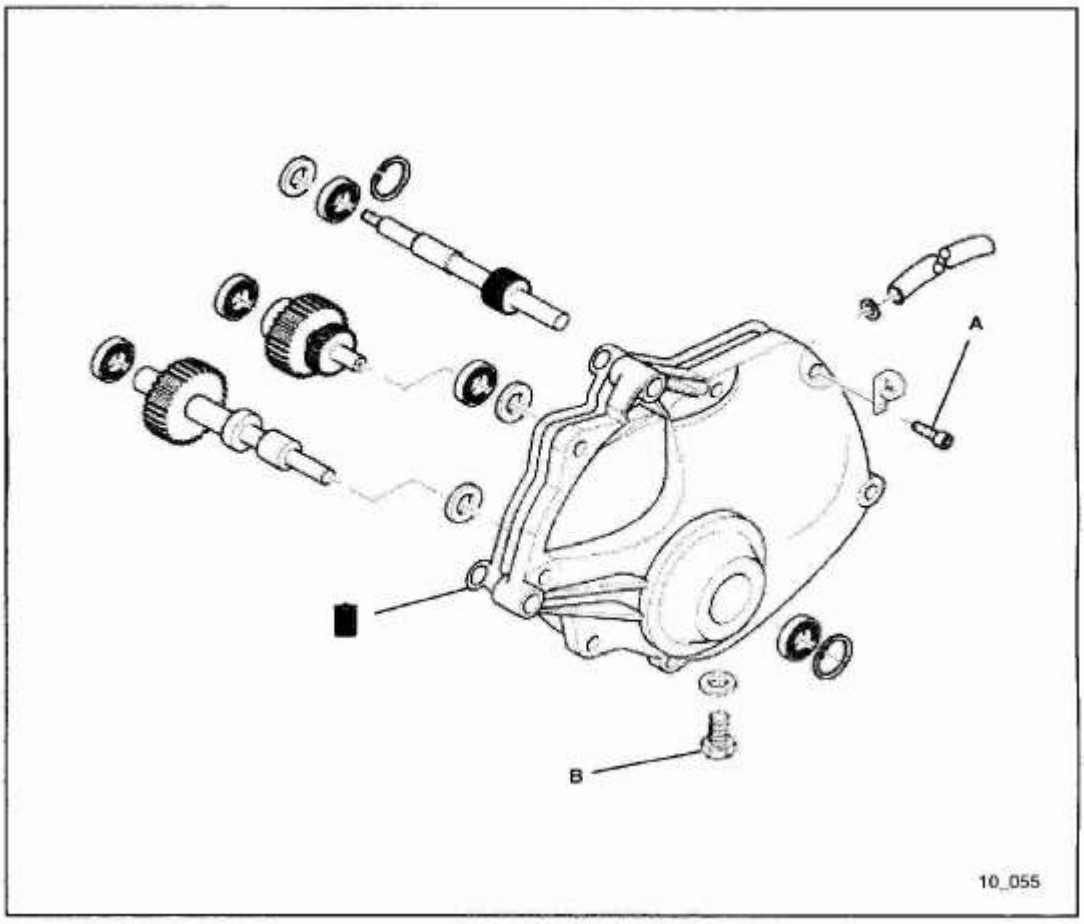

LUBRICATE WITH OIL

LUBRICATE WITH GREASE

APPLY PRODUCT

CLEAN CAREFULLY

CAUTION: HANDLE WITH CARE

ALWAYS REPLACE

REFERENCE	**A**	**B**
QUANTITY	6	1
TORQUE Nm	24~27	15~17

- Drain the rear hub oil through the oil drainage cap located under the Engine. - Drain the rear hub oil through the oil drainage cap located under the Engine. - Remove the 7 fastening screws. Remove the hub cover and the relevant gasket	
- Remove the lay shaft. - Remove the wheel axle with gear.	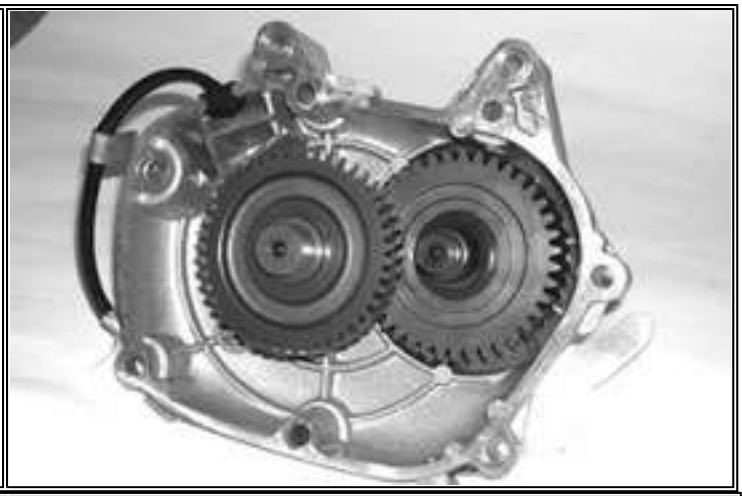
- Check all bearings (wear, clearance and noise). In case of anomalies, proceed as follows. To remove the wheel axle bearing on the engine crankcase, use the following parts. Specific equipment and tools: 15-mm pliers: 001467Y34 or 001467Y014 Bell: 001467Y031	
To remove the lay shaft bearing on the engine crankcase, use the special removing tool. Specific equipment and tools: 20-mm pliers: 001467Y006 Bell: 001467Y035	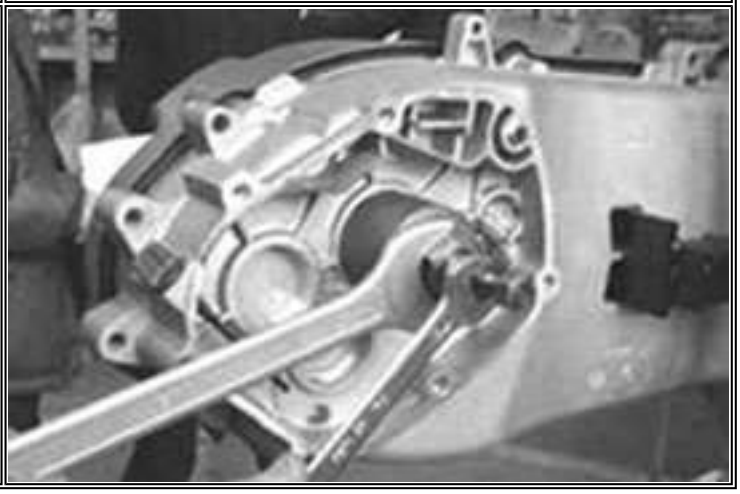

- Remove the snap ring from the hub cover outside.	
- Support the hub cover using the column kit. - Pull out the bearing by the specific tool. Specific equipment and tools: Column kit: 020476Y Handle: 020376Y Adapter 37 mm: 020477Y 30-mm guide: 020483Y	
- Remove the oil guard by a screwdriver.	

- Support the hub cover using the column kit. - Extract the bearing by the specific tool. Specific equipment and tools: Column kit: 020476Y Pliers: 001467Y006 Bell: 001467Y007	

- If you have to remove the driven pulley shaft, the relevant bearing and the oil guard, remove the transmission cover and the clutch unit as described in Chapter 3, (Automatic transmission). - Extract the driven pulley shaft from the bearing. - Remove the oil guard by a screwdriver into the hub gear box. - Remove the snap ring shown in the figure.	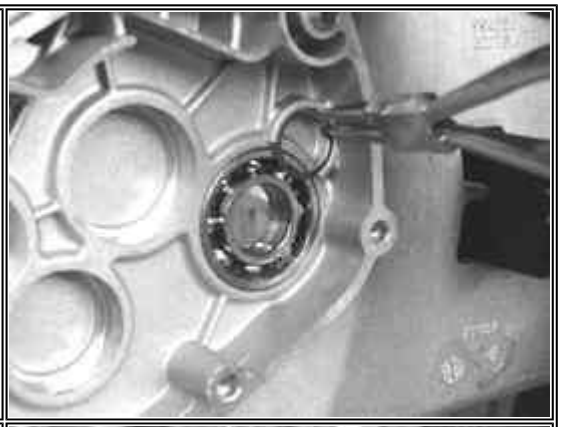
- Pull out the driven pulley shaft bearing from the engine crankcase using the specific tool. Specific equipment and tools: Handle for punches: 020376Y Adapter 37 - 40 mm: 020358Y 25 mm guide: 020364Y	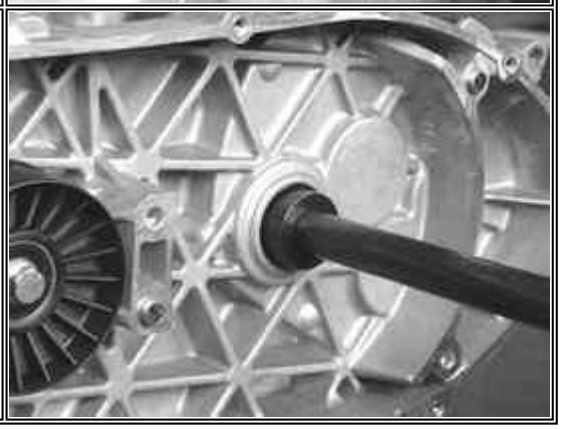

- Insert the pulley shaft oil guard on the transmission side.	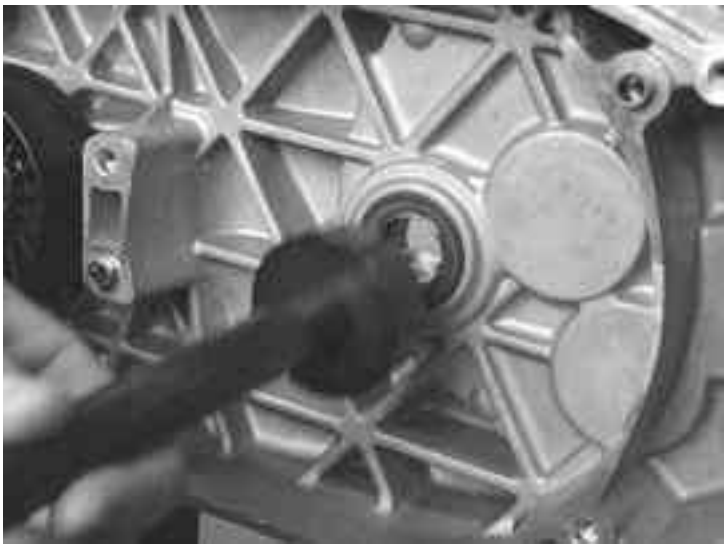

- Place the safety lock snap ring of the driven pulley shaft bearing. N.B.: Place it in the position shown in the figure.	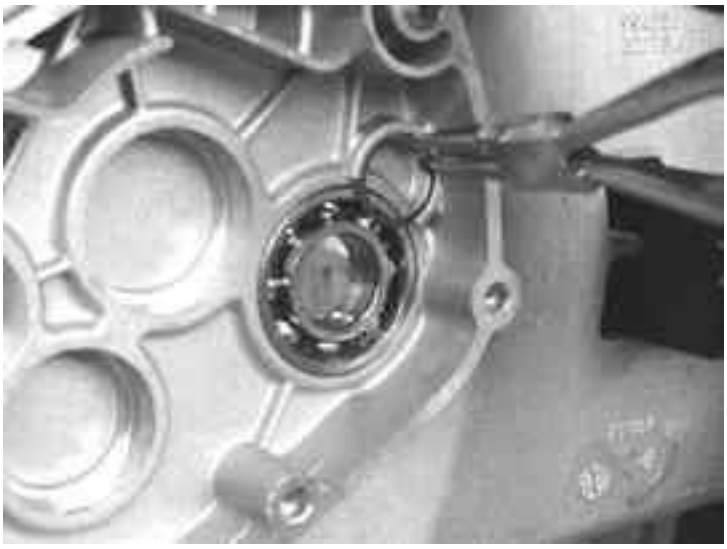

- Heat the wheel axle bearing seat on the crankcase. - Insert the wheel axle bearing in the upper crankcase seat by the specific tool. N.B.: Place it with the balls facing the hub (this applies to bearings with plastic cage). Specific equipment and tools: Handle 020376Y Adapter 42x47 mm 020359Y 15-mm guide 020412Y	

- Heat the intermediate gear bearing seat. - Insert the intermediate shaft bearing by the specific tool. N.B.: Place it with the balls facing the hub (this applies to bearings with plastic cage). Specific equipment and tools: Handle: 020376Y Adapter 42x47 mm: 020359Y 20 mm guide: 020363Y	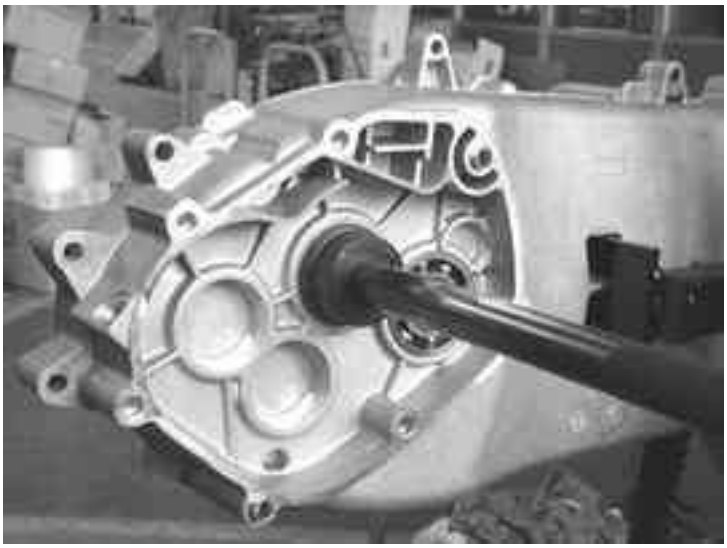
- Insert the driven pulley shaft bearing until it abuts against the bottom of the seat using the specific tool. N.B.: Place it with the balls facing the hub (this applies to bearings with plastic cage). Specific equipment and tools: Handle: 020376Y Adapter 52x55 mm: 020360Y 25 mm guide: 020364Y	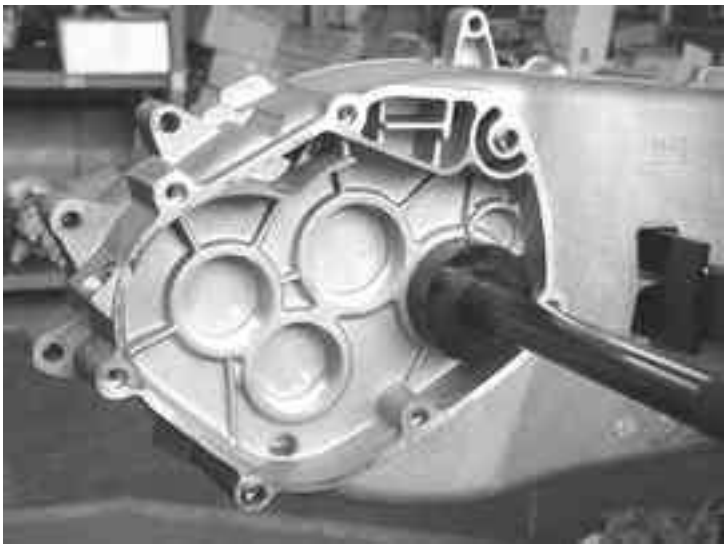
- Heat the crankcase by the thermal gun. Specific equipment and tools: Heater 020151Y	

- Check that the matching surface exhibits nodeformations.
- Check the bearing capacity.

Incase of faults, replace the hub cover.

?φοντ σιζε=1 φαχε=∀Τιμεσ Νεω Ρομαν∀> Support the hub cover using the column kit. ?φοντ σιζε=1 φαχε=∀Τιμεσ Νεω Ρομαν∀> Insert the wheel axle oil guard with the sealing lip facing the inside of the cover. ?φοντ σιζε=1 φαχε=∀Τιμεσ Νεω Ρομαν∀> Place the oil guard flush with the crankcase. Specific equipment and tools: Handle: 020376Y Adapter 52x55: 020360Y Column kit: 020476Y	

- Replace the snap ring	

- Heat the wheel axle bearing seat from the cover outside. - Insert the wheel axle bearing on the cover by the specific punch until abutment. Specific equipment and tools: Handle 020376Y Adapter 52x55 mm	

020360Y 30-mm guide 020483Y	

- Insert the intermediate shaft bearing on the cover by the specific tool. N.B.: Place it with the balls facing the hub (this applies to bearings with plastic cage). Specific equipment and tools: Handle 020376Y Adapter 52x55 mm 020360Y 20-mm guide 020363Y	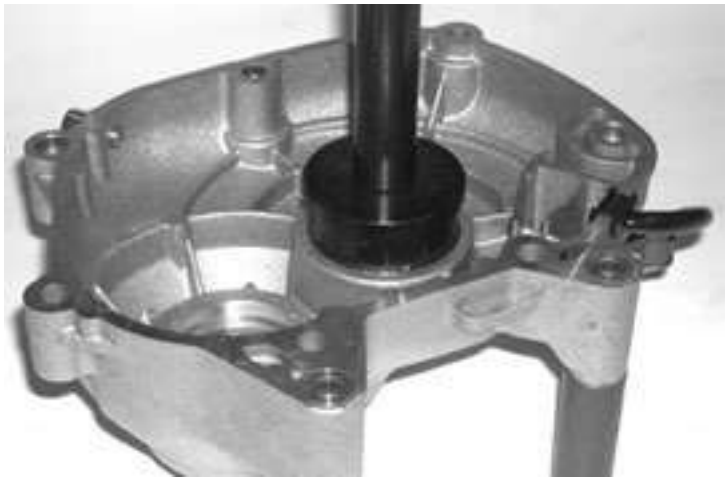

- Heat the bearing seats on the cover using the thermal gun. - Support the hub cover using the column kit. Specific equipment and tools: Heater 020151Y Column kit 020476Y	

- Check that the 3 shafts exhibit no wear or deformation on the toothed surfaces, at the bearings and at the oil guards. In case of faults, replace the damaged parts.	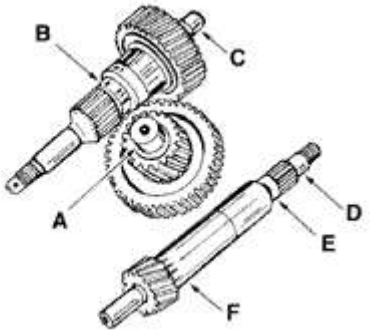

Connection diameterfor lay shaft:

A = d 20 $^{-0,01}_{-0,02}$ mm

Connection diameterfor wheel axle:

B = d 30 $^{-0,010}_{-0,023}$ mm

C = d 15 $^{-0,01}_{-0,02}$ mm

Connection diameterfor shaft
Driven pulley:

D = d 17 $^{-0,01}_{-0,02}$ mm

E = d 20 $^{-0,01}_{-0,02}$ mm

F = d 25 $^{-0,01}_{-0,02}$ mm

- Place the 3 shafts as shown in the figure.	

- Check the proper position of the centering dowels. - Install a new gasket. - Install the cover checking the correct position of the vent pipe.	

- Place the 7 fastening screws, tighten them atthe prescribed torque checking the position of the vent pipe sealing bands andof the 3 shorter screws as shown in the figure
- Refill with the prescribed oil to the maximumlevel.

Tighteningtorque:

Hubcover screws: 24 ~ 27 Nm

Prescribed oil: TUTELA ZC90 Quantity:~ 250 cc

FLYWHEEL COVER

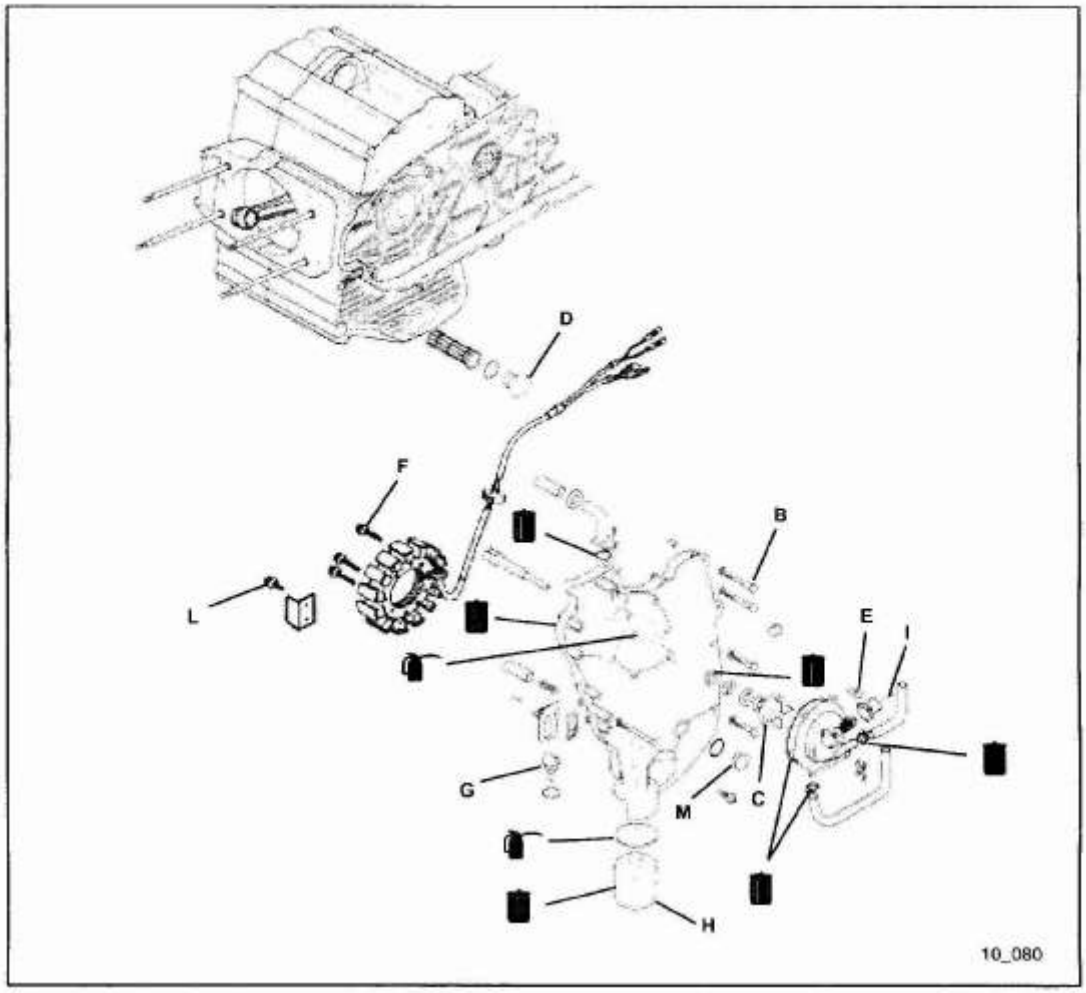

LUBRICATE WITH OIL

CLEAN CAREFULLY

LUBRICATE WITH GREASE

CAUTION: HANDLE WITH CARE

APPLY PRODUCT

ALWAYS REPLACE

REFERENCE	B	C	D	E	F	G	H	I	L	M
QUANTITY	14	1	1	6	3	1	1	2	2	1
TORQU	12	4	24	3	8	2	14	1,5	3	4

- Remove the three bands shown in the figure for an easier removal of the flywheel cover, remove the cylinder delivery sleeve and disconnect the recirculation sleeve from the pump cover. **N.B.: The bands must be replaced. To remove them, open with a screwdriver or cut them.** **Be careful not to damage the plastic unions.**	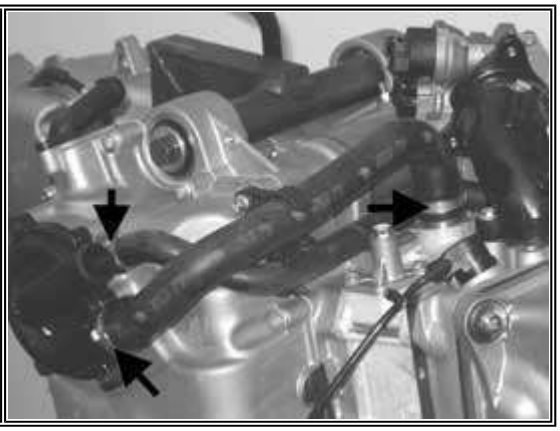

- Unscrew the 6 fixing screws and remove the water pump cover. N.B.: It is possible to remove the pump cover with sleeves, if required.	

- Drain the engine oil by removing the drainage cap. - Prepare a suitable container to collect the oil.	
- Remove the pre-filter.	
- Remove the oil filter using a filter tape or shaped cup wrench.	
- Loosen the 14 fastening screws. - Remove the flywheel cover with the relevant gasket and the cooling system sleeve support. N.B.: The screws are of 4 different lengths. Note	

the relevant positions.	

Caution: Remove the cover avoiding any possible interferences between stator androtor.
Caution: Be careful to prevent slippage of the by-pass valve and of the relevantspring.

- Remove the by-pass and the relevant spring. - Remove the sealing gasket.	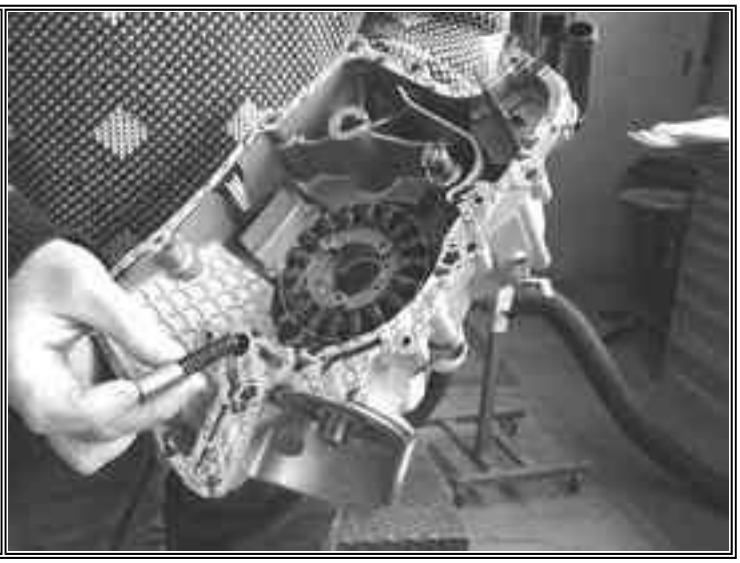

- Remove the 2 fastening screws and the wiring guide bracket.	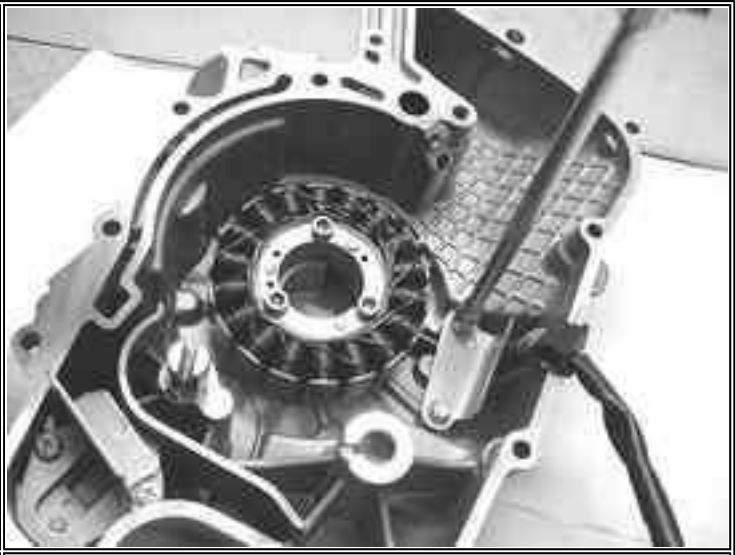
- Unscrew the 3 fastening screws and remove stator and its wiring.	
- Unscrew the 2 fastening screws and remove the reed valve support with head.	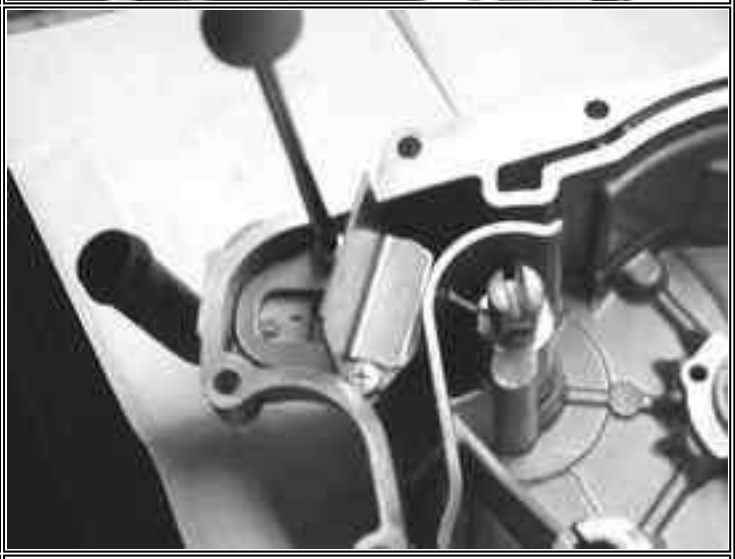
- Remove the blow-by reed valve with the relevant sealing gasket.	

	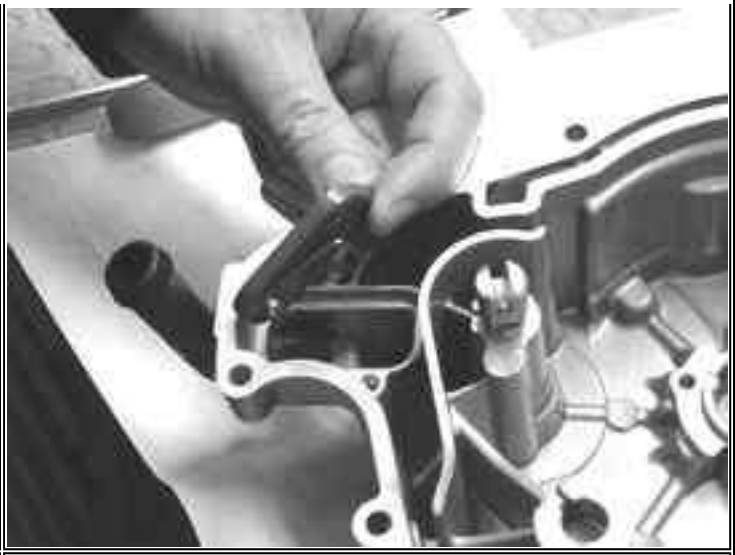
- Unscrew the fastening screw and remove the gas outlet union with the relevant O-ring.	
- Remove the water pump impeller by unscrewing it from the relevant shaft. N.B.: The threading is clockwise. It is advisable to prevent the shaft rotation by inserting a 12-mm wrench into the drive.	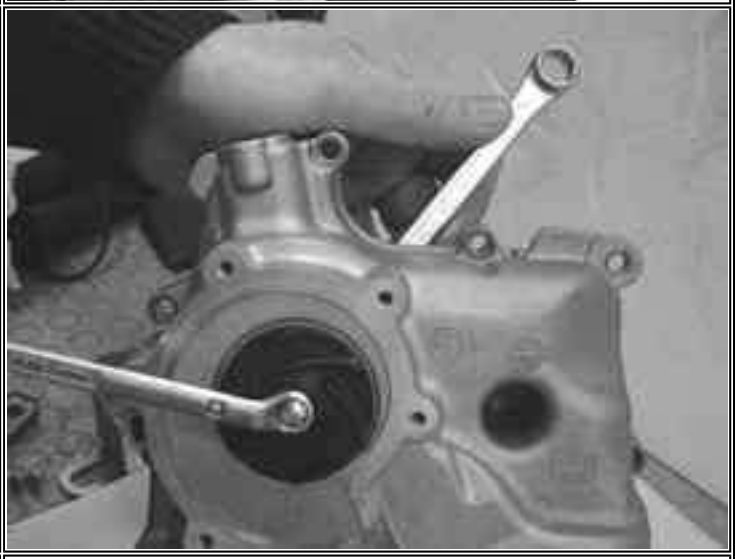
- Extract the shaft with the relevant abutment washer.	

- Remove the sealing ring.	
- Remove the ceramic ring and the relevant gasket.	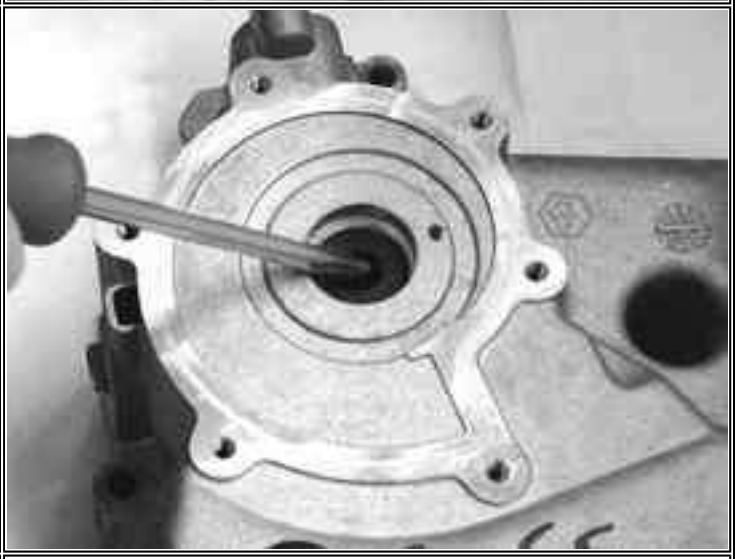
- Remove the sealing ring for the pump shaft lubrication using a suitably shaped tool.	

	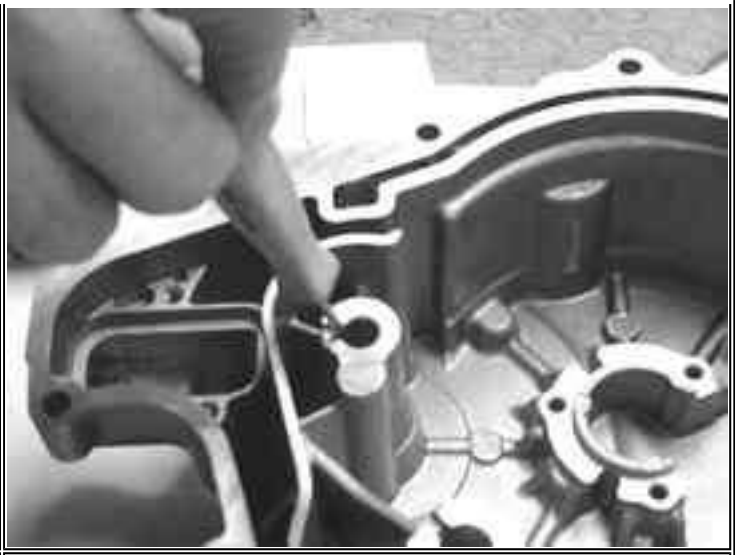
- Remove the engine oil filling cap/bar and the reference oil cap for the timing. - Remove the minimum oil pressure sensor.	

- Check the integrity of the stator and of the relevant wiring.	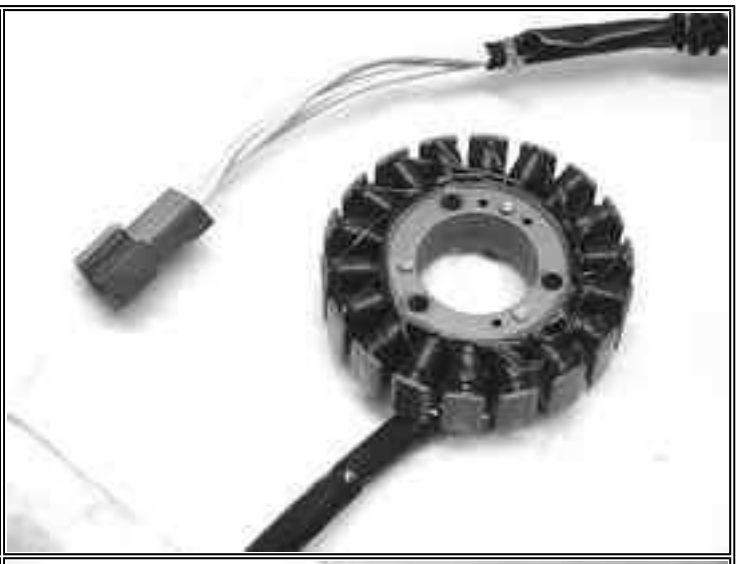
- Check the continuity between the 3 phases. N.B.: The values refer to ambient temperature. A check with the stator at working temperature gives higher values. Approximate resistance of each phase: 0.2 ~1 Ω	
- Check the earth insulation of each phase. - In case of irregularities, carefully check the wiring as this consists of 2 cables: stiff cables close to the stator and soft cables to the connector.	
- Check that the winding is placed so as to not interfere with the fastening screw heads.	

	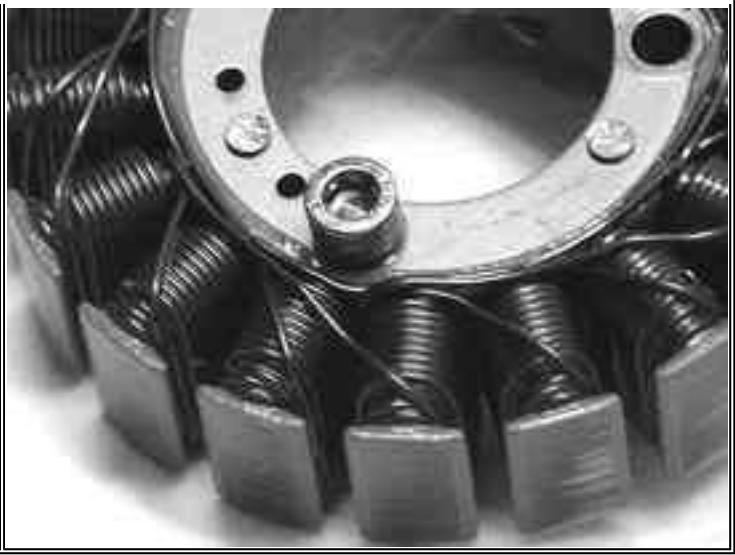

- Check that the piston outside diameter exhibits no scratches or damages. Outside diameter: 10.5 mm - Check the free length of the spring. Standard length: 65.2 mm Limit length after use: 64.0 mm	
- Check that the water pump shaft exhibits no wear on the connection in contact with the case, in the oil guard working zone and on the drive. - Check that the ceramic seal working surfaces are not scratched or worn.	
- Check that the impeller is free from deformation or cracks. - Check that the plastic impeller is perfectly integral with the metal part.	
- Check that the water pump cover is free from deformation or cracks. - Check that the sealing O-rings are in good working order.	

- Check that the blow-by circuit reed closes properly.	

- Before re-assembling, carefully check the cleaning of all components. - For the cover case, carefully check all lubrication paths, in particular: - the 3 by-pass ducts.	
- Oil feeding duct at the water pump shaft connection.	
- Pump drainage duct.	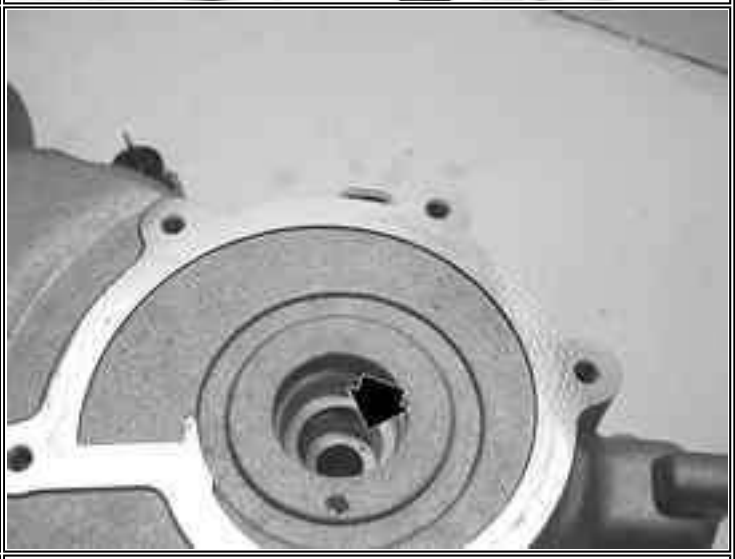
- Oil pressure sensor feeding duct.	

- Oil vapour decantation chamber drainage	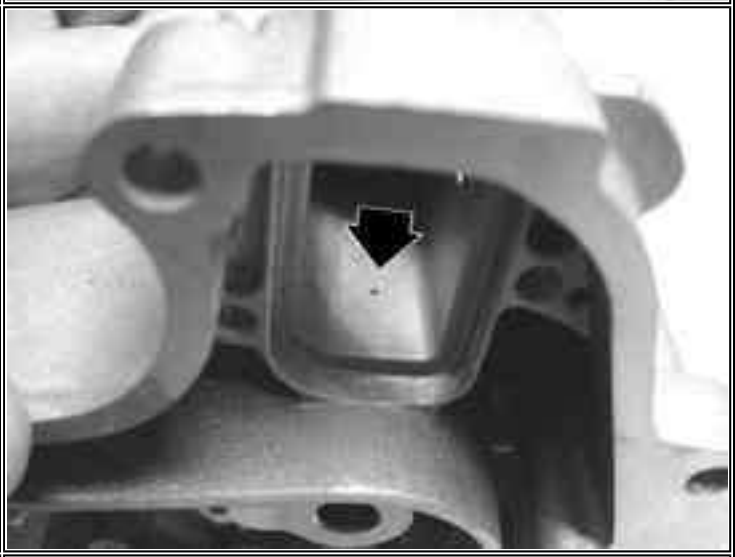
- Replace the blow-by reed valve using a new sealing gasket. - replace the support with head tightening the screws at the prescribed torque. Tightening torque: Support screws with head: 0.3 ~0.4 Nm	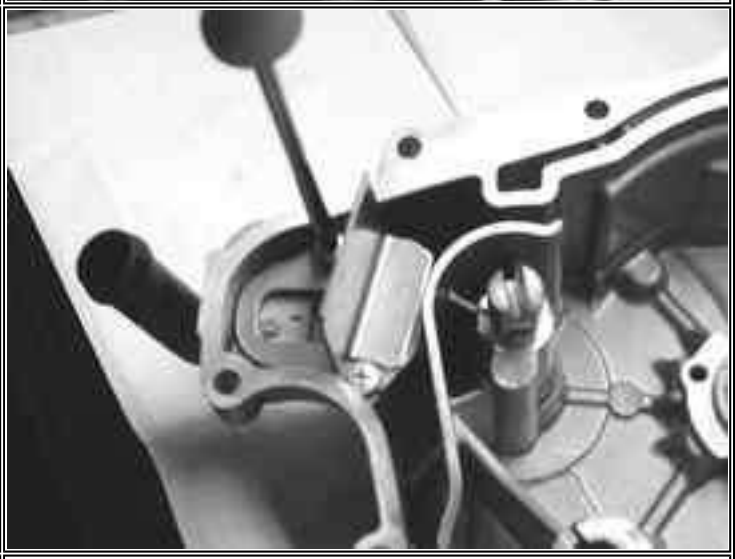
- Install a new pump shaft sealing using the specific tool. - Install the minimum oil pressure sensor and tighten at the prescribed torque. Tightening torque: Minimum oil pressure	

sensor: 12 ~14 Nm Specific equipment and tools: Handle 020376Y 15-mm guide 020412Y	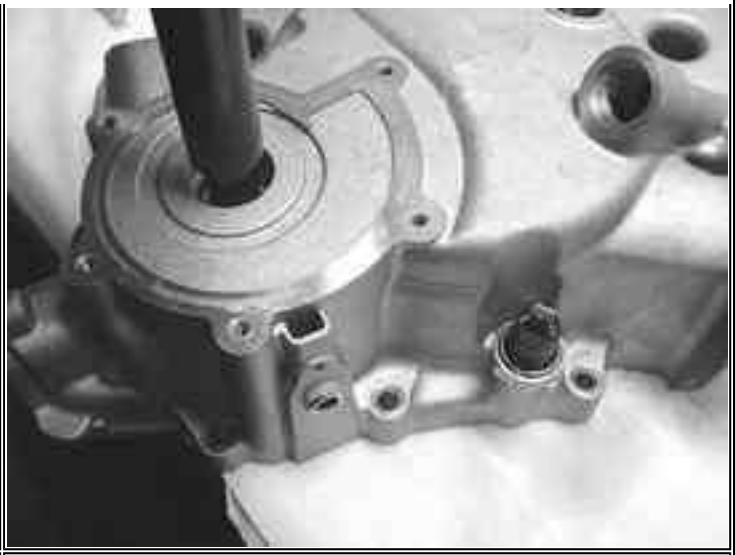
- Pre-assemble the ceramic seal and the relevant gasket. N.B.: Place the chamfering towards the gasket being careful not to foul the ceramic ring with oil or grease, which would impair the seal.	
- Insert the ceramic seal on the flywheel cover. N.B.: Assemble by hand to prevent damages to the ceramic seal. - Insert the water pump shaft after lubricating the flywheel cover seat. - Insert the mechanical seal on the shaft up to the impeller abutment surface. N.B.: The final introduction depth will be determined by the impeller.	
- Screw the impeller and tighten at the prescribed torque. Tightening torque: Water pump impeller: 4 ~ 5 Nm	

	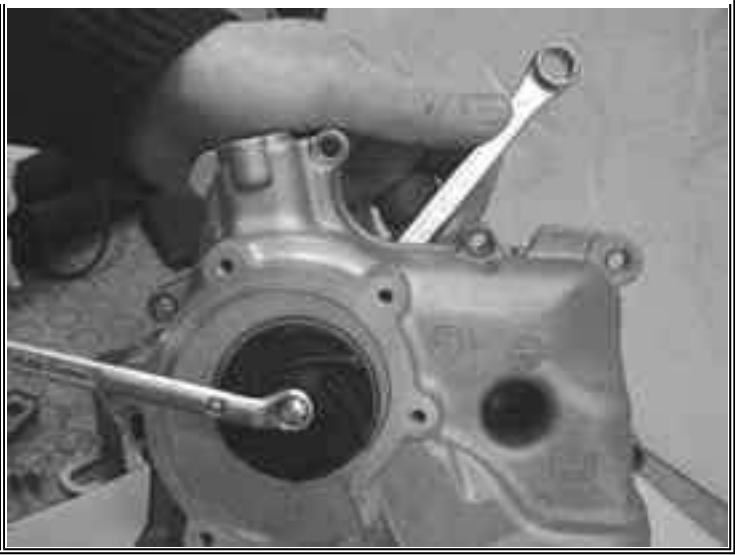

- Install the stator with wiring, tightening the 3 screws at the prescribed torque. N.B.: Insert the rubber wiring sealing gasket into the special seat on the crankcase. Tightening torque: Stator fastening screws: 8 ~10 Nm	
- Install the wiring guide bracket tightening the 2 screws at the prescribed torque. Tightening torque: Wiring guide bracket fastening screws: 3 ~4 N m	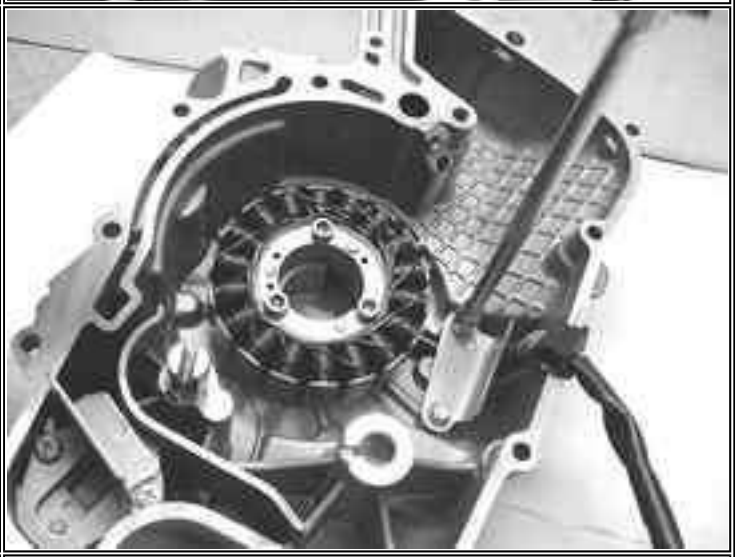
- Temporarily install the timing check hole cap and the engine oil filling cap/bar. - Insert the blow-by recovery duct using a new O-ring. - Tighten the screw at the prescribed torque. Tightening torque: Blow-by recovery duct fastening screws: 3 ~4 N m	
- Insert the spring and the by-pass piston on the flywheel cover. N.B.: Lubricate the by-pass valve.	

- Install a new gasket on the engine crankcase. - Check the presence of the 3 centering dowels.	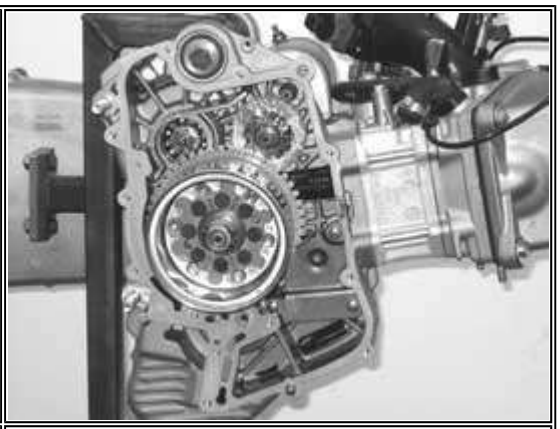
- Turn the driving shaft to align the counter-shaft drive with a reference on the crankcase (see figure).	
- Repeat the alignment for the water pump shaft with the same reference on the cover. N.B.: These arrangements are useful especially when working with water pump cover already assembled.	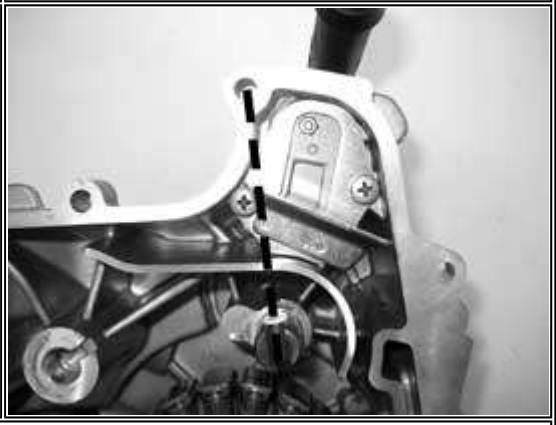
-Install the flywheel cover on the engine, being careful to prevent any possible interferences between stator and rotor. Caution - Failure to observe this rule can cause the breakage of the ceramic magnets.	
- Tighten the 14 cover fastening screws at the prescribed torque. N.B.: The screws are of 4 different lengths: the 3 shorter ones are in the position shown in the figure. - the longer one is placed under the engine oil filling cap.	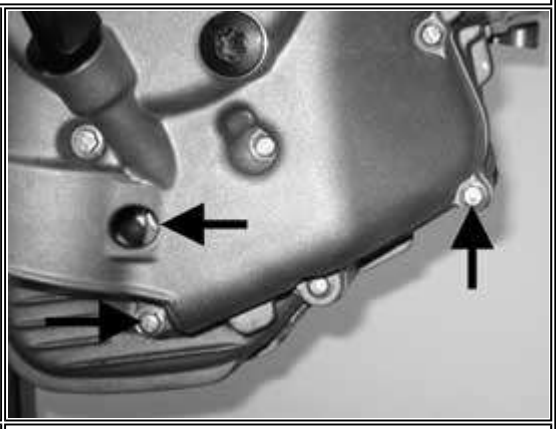
- the intermediate ones are for the remaining attachments, except for	

the sleeve support fastening screw (highlighted in the figure), which is slightly longer. Tightening torque: Flywheel cover fastening screws: 11 ~13 Nm	

- Carefully place a new O-ring avoiding contacts with grease or oil. Caution - Failure to observe this regulation can cause irreversible deformation to the O-ring. - Install the water pump cover and tighten the 6 fastening screws at the prescribed torque.	

Tighteningtorque:
Flywheelcover fastening screws: 3 ~4 Nm

- Install a new oil filter, lubricate the sealing gasket, and tighten further at the prescribed torque. Tightening torque: Oil filter: 12 ~16 Nm	
- Install the cylinder delivery sleeve and connect the recirculation sleeve to the pump cover using 3 new bands. N.B.: Lock the bands with the special pliers being careful not to cut deeply into the sleeve and preventing insufficient tightening.	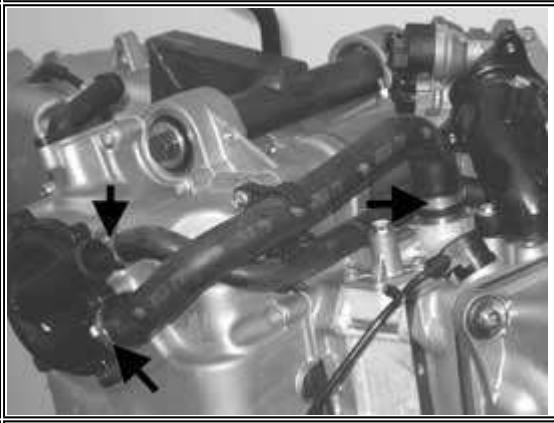
- Install the pre-filter and the engine oil drainage cap and tighten at the prescribed torque. - Refill the engine with the prescribed oil type. Tightening torques: Oil drainage cap: 24 ~30 Nm Recommended oil: Selenia HI Scooter 4 Tech 5W/40	

FLYWHEEL AND START-UP

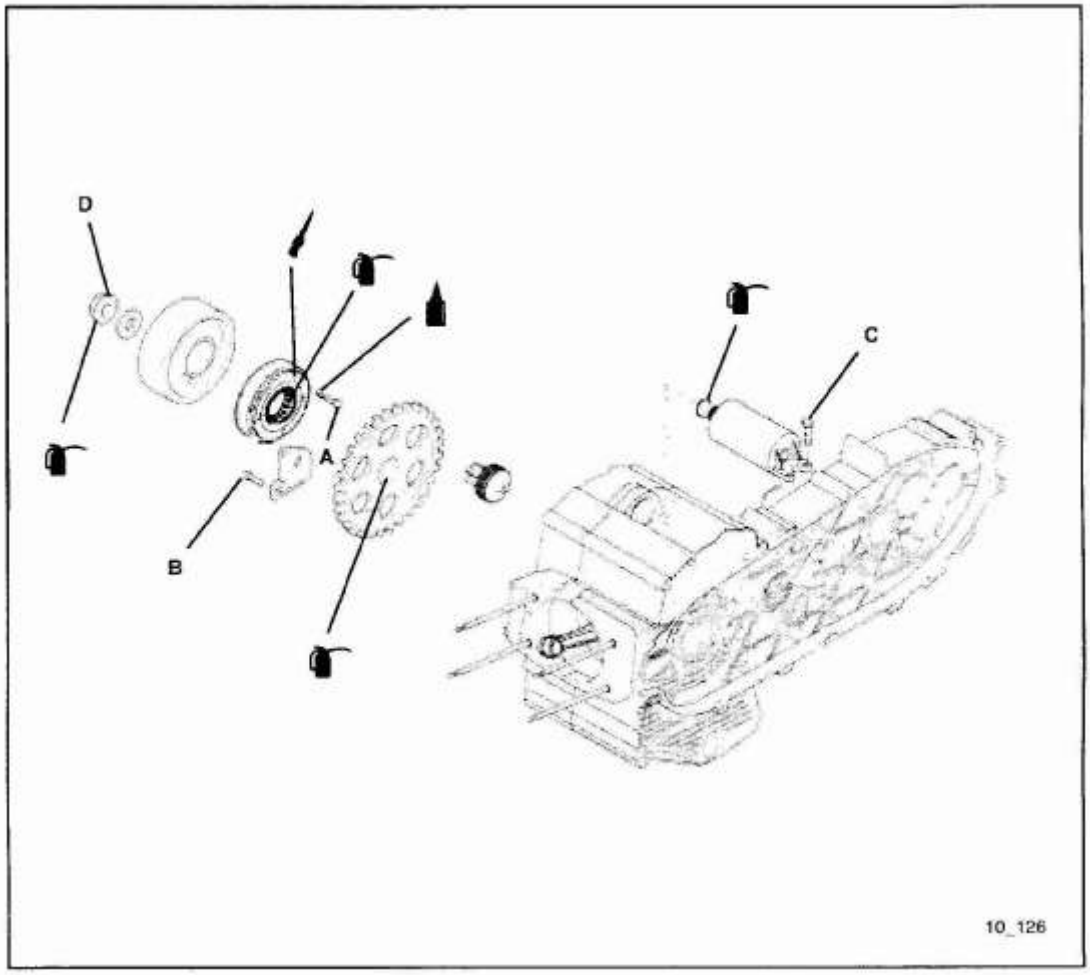

LUBRICATE WITH OIL

LUBRICATE WITH GREASE

APPLY PRODUCT

CLEAN CAREFULLY

CAUTION: HANDLE WITH CARE

ALWAYS REPLACE

REFERENCE	A	B	C	D
QUANTITY	6	3	2	1
TORQUE Nm	14	3.5	12	120

- Remove the three bands shown in the figure for an easier removal of the flywheel cover, remove the cylinder delivery sleeve and disconnect the recirculation sleeve from the pump cover. N.B.: The bands must be replaced. To remove them, open with a screwdriver or cut them. Be careful not to damage the plastic unions.	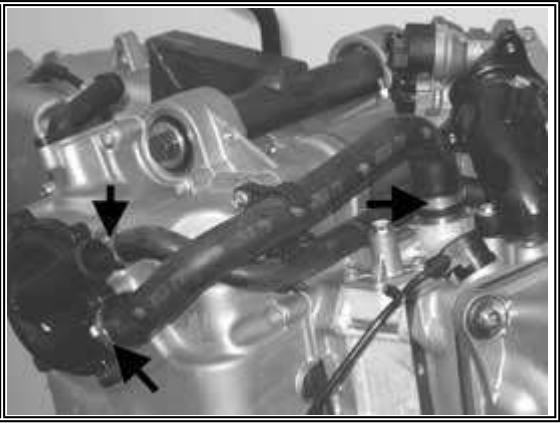

N.B.: This operation may also be carried out with flywheel cover assembled. - Loosen the two fastening screws. - Extract the complete starter motor.	

N.B.: If you must remove the magneto flywheel, it is necessary to remove the chain guide sliding block retain plate first. - Unscrew the 3 fastening screws and remove the chain guide sliding block retain plate and the start-up rim.	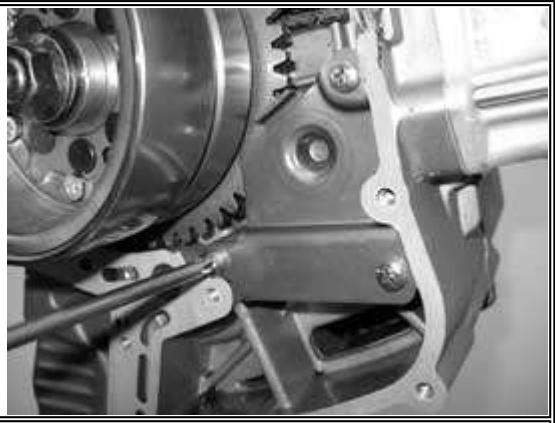
- Align the holes obtained on the flywheel with the crankcase housing to allow the introduction of the specific tool.	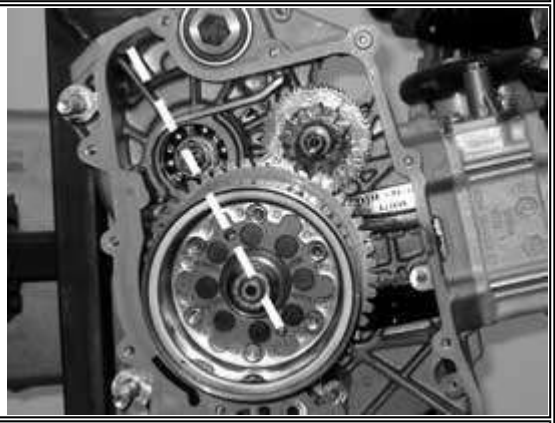
- Tighten the bushing of the flywheel lock tool on the removing tool threading.	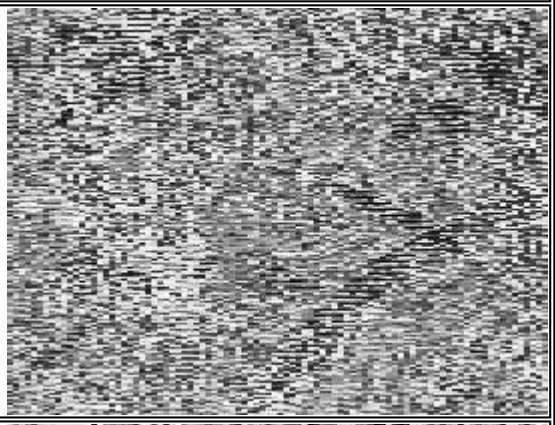
- Insert the specific tool as shown in the figure, making sure that the pins are perfectly inserted into the previously aligned holes and that it is perfectly abutted and almost flush with the flywheel. Specific equipment and tools: Flywheel lock tool 020472Y	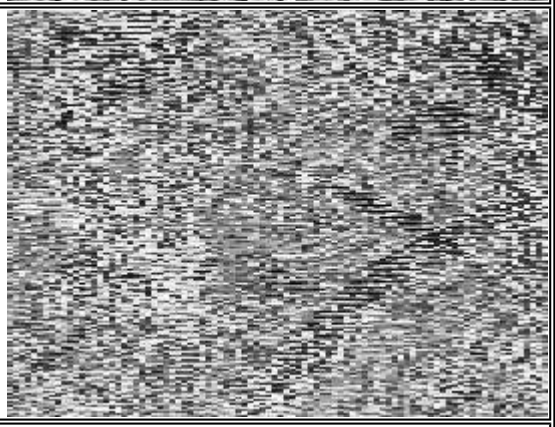
- Loosen the magneto flywheel fastening nut. - Remove the specific tool and the fastening nut.	

- Remove the washer.	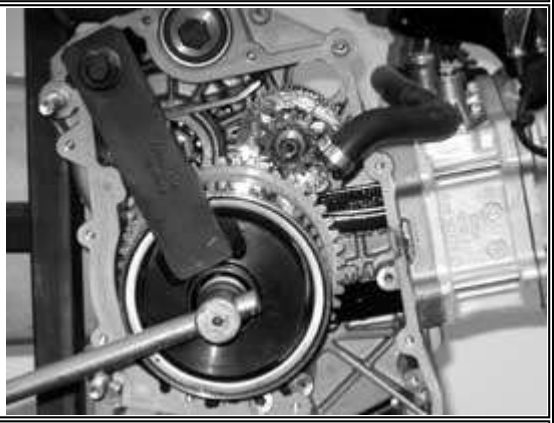
- Insert the nut again so as to slightly uncover the shaft and free the space that was occupied by the washer. Caution : This operation is required as the flywheel is strongly locked; the cone detachment may therefore cause the rotor slippage, with the consequent breakage of the magnets.	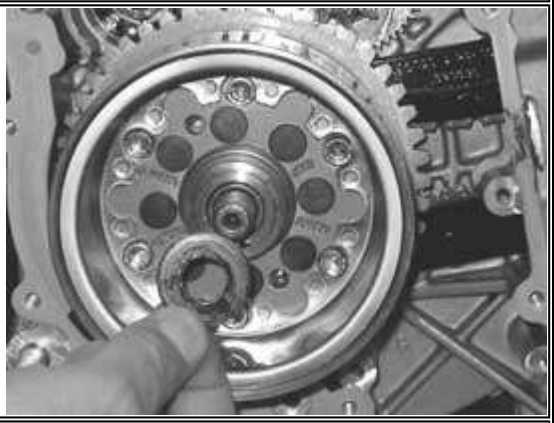
- Insert the specific removing tool. - Using a 27-mm wrench and a 19-mm bushing, release the magneto flywheel. Specific equipment and tools: Flywheel removing tool 020467Y	
- Remove the removing tool. - Remove the nut and extract the magneto flywheel with the start-up rim. - Remove the driving shaft key.	

- To remove the start-up rim from the free wheel it is necessary to turn it clockwise and pull it out.	
- Remove the free wheel from the magneto flywheel by loosening the 6 fastening screws. N.B.: Since the free wheel must be removed, it is advisable to loosen the 6 fastening screws in advance with the flywheel still installed on the driving shaft.	
- The free wheel is coupled to the flywheel with high precision; if removal is difficult, use 2 screws as gripping points and as removing tools, if required.	

- Extract the intermediate gear provided with torque limiter.	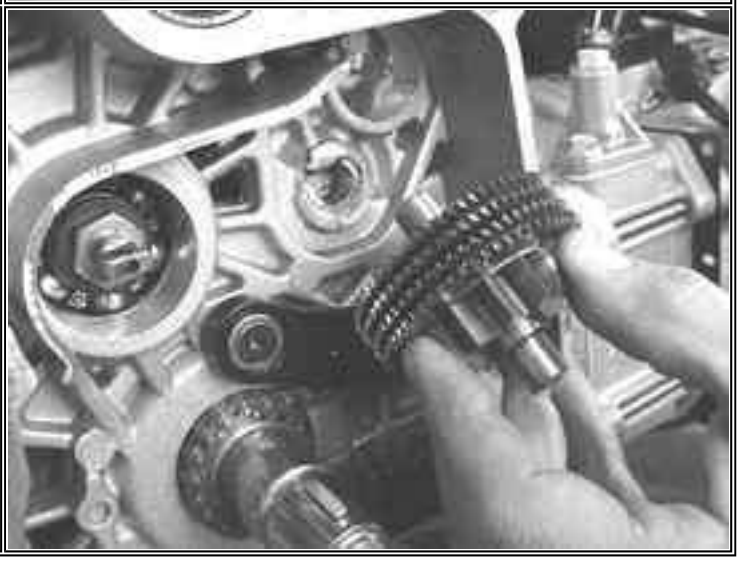

- Check the integrity of the magnets. - Check that the magnet support cage is free from deformation or cracks. - Check that the flywheel nailing exhibits no loosening.	

- Check that the free wheel and the start-up rim hub surface are free from wear. - Check the hub outside diameter. Hub outside diameter: d 45,665 $^{+0,008}_{+0,005}$ mm	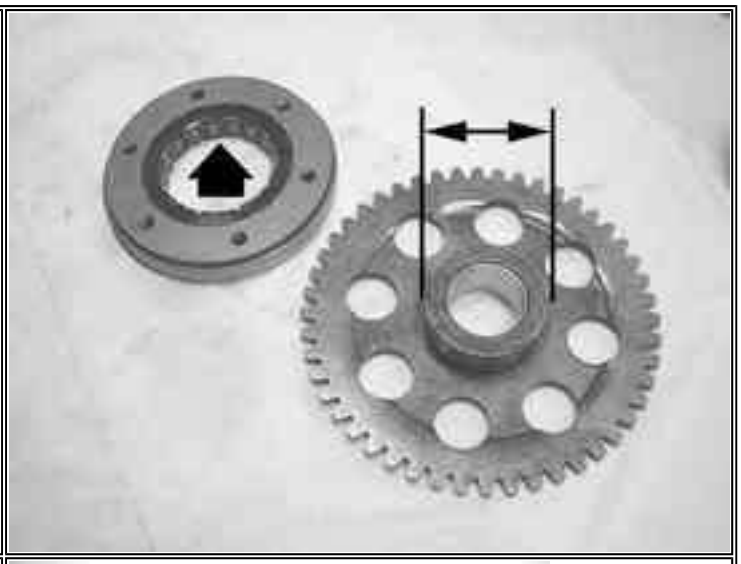
- Check the start-up brass inside diameter. - Check that the toothing is not worn. Brass inside diameter: d 27 $^{+0,020}_{+0,041}$ mm	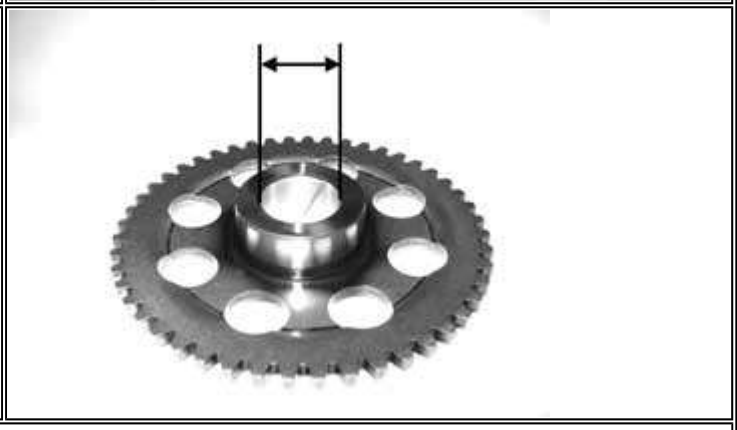

N.B.: In the event of failures concerning the hub, it is advisable to replace the start-up rim and the free wheel.
If only the brass is worn, it is possible to replace only the complete start-up rim. In that case, check also the diameter and the surface of the connection on the driving shaft. In case or irregularities, replace the driving shaft.

- Check that the toothing is not worn. - Check the diameter of the two ends. Gear connection diameter: d $12^{-0-0,011}$ mm	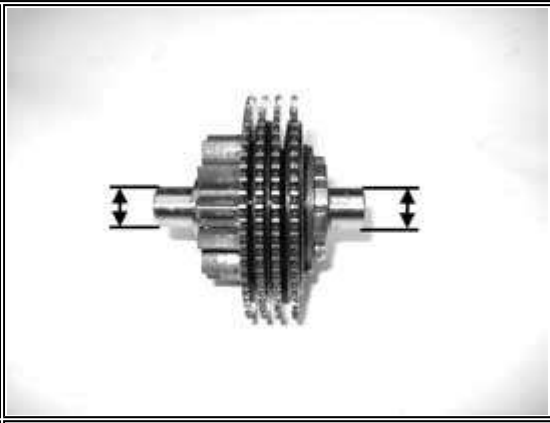
Also check the capacity diameter on the flywheel cover and on the engine crankcase. Flywheel cover connection diameter: **d** $12^{+0,034\ -0,016}$ mm Engine crankcase connectiondiameter: **d** $12^{+0,034\ -0,016}$ mm	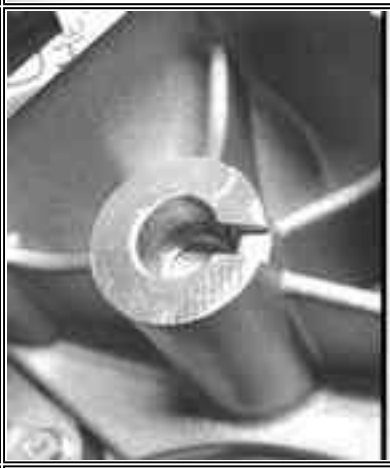
N.B.: The torque limiter is provided with 4 gears that have the function?of clutch driving plates. Driven plates consist of 4 Belleville washers provided with grooved profiles; this assembly allows transmitting torques lower than 10 kgm. In case of incorrect start-up manoeuvres, the limiter prevents any kicks, with consequent reversal of direction of the driving shaft which would impair the engine structure.	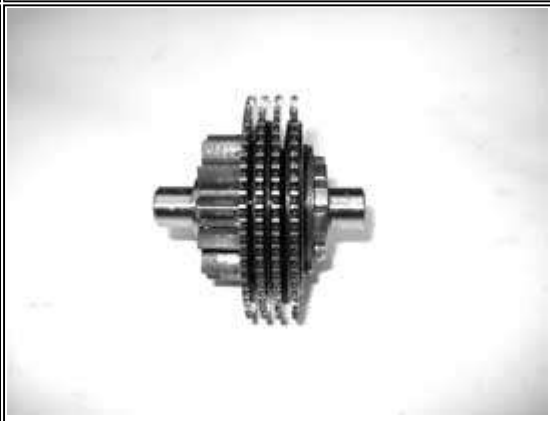

The limiter assembly cannot be overhauled. Incase of irregularities on the toothed discs, replace the assembly.

- Check that the free wheel contact surfaces are in good condition. - Carefully clean the free wheel to remove any residues of LOCTITE. - Degrease the threading of the holes on the free wheel and the fastening screws. - Apply LOCTITE 234 at the ends of the screws. - Install the free wheel on the magneto flywheel, with the rectified part in contact with the flywheel, that is with visible wheel snap ring. - Tighten the 6 fastening screws in a crossed sequence at the prescribed torque. Tightening torque: Free wheel fastening screws: 13 ~15 Nm	
- Lubricate the free wheel "rollers"	

- Lubricate the inside brass and the start-up rim hub surface.	
- Install the start-up rim on the flywheel turning it clockwise and inserting at the same time.	

- Lubricate the gear housing on the engine crankcase.	
- Insert the intermediate gear with torque limiter	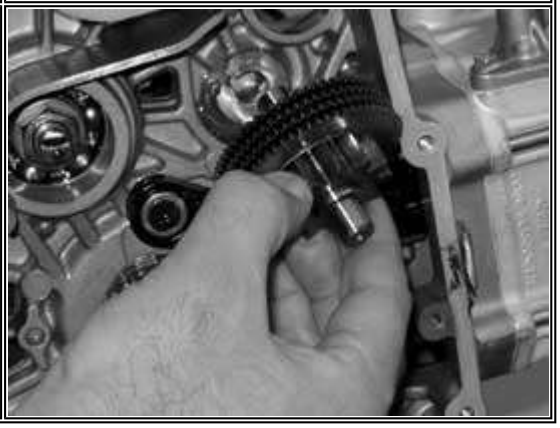

- Insert the key on the driving shaft. - Install the magneto flywheel checking the proper insertion of the key and engaging the torque limiter gear with the start-up rim.	
- Insert washer and nut on the driving shaft.	
- Tighten thoroughly the guide bushing of the flywheel lock tool and loosen by 1/4 turn. **N.B.:** Failure to observe this rule causes the locking of the guide on the flywheel. Specific equipment and tools: Flywheel lock tool 020472Y	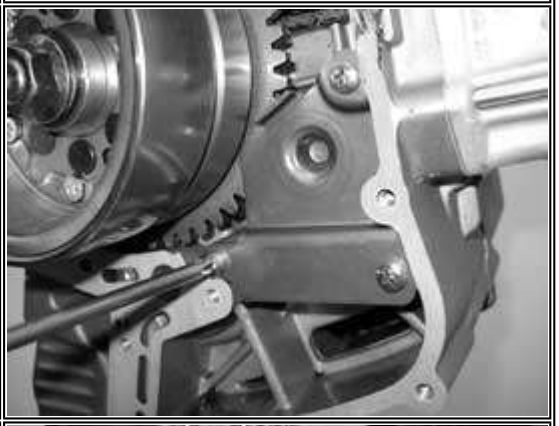
- Align the 2 holes of the magneto flywheel with the case housing to allow the introduction of the specific tool.	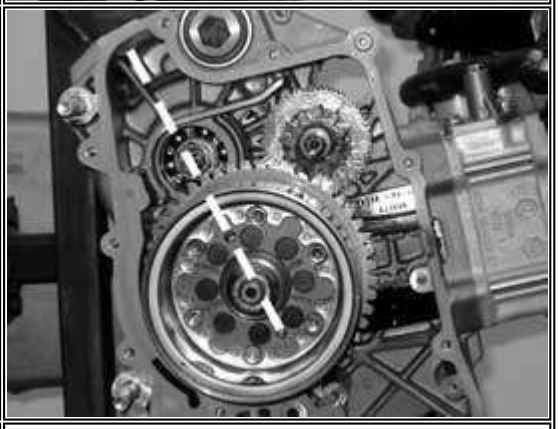
- Insert the specific tool checking that the pins are perfectly introduced into the seat. Specific equipment and tools: Flywheel lock tool 020472Y	

	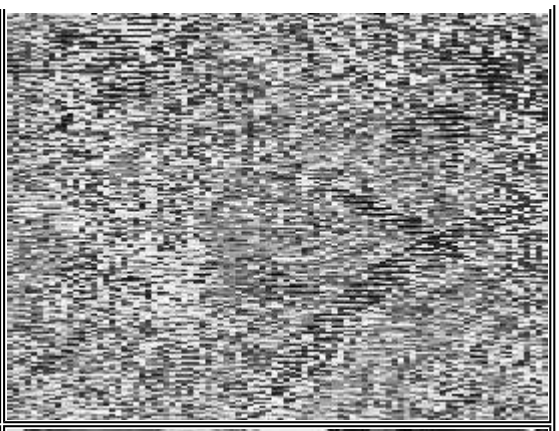
- Tighten the flywheel lock nut at the prescribed torque. Tightening torque: Flywheel lock nut: 115 ~125 Nm	
- Install the chain guide retain plate tightening the 3 screws at the prescribed torque. N.B.: Before tightening the screws, move the start-up rim in contact with the crankcase and check that it is free to rotate in counter-clockwise direction. Tightening torque: Chain guide sliding block retain plate fastening screws: 3 ~4 Nm	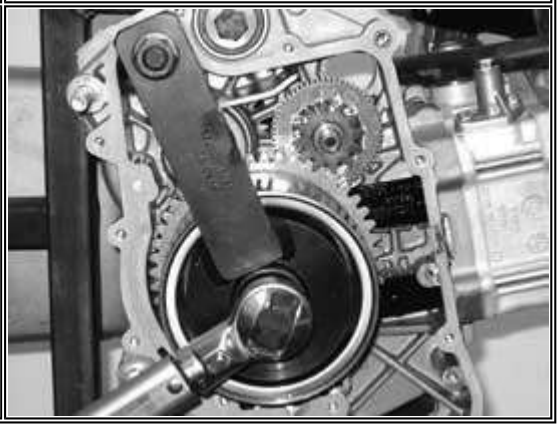

- Check that the O-ring is in good working order and lubricate it. - Insert the starter motor. - Tighten the 2 fastening screws at the prescribed torque. Tightening torque: Starter motor fastening screws: 11 ~13 Nm	
- Lubricate the intermediate gear seat with torque limiter on the flywheel cover. - Align the water pump drive with a reference and install the flywheel cover as described in the (Engine Flywheel Cover Assembly) chapter.	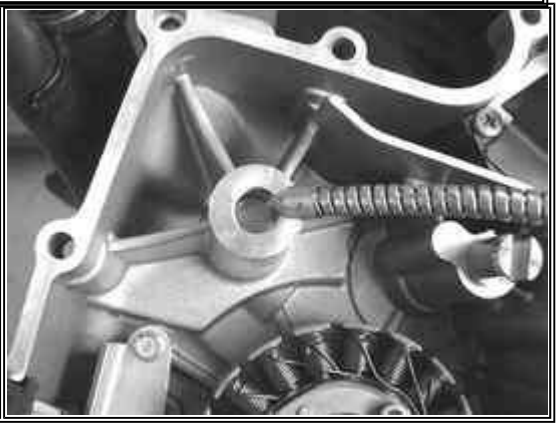

- Remove the Automatic transmission	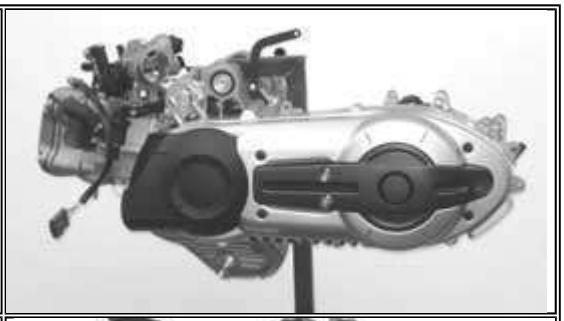
- Remove the Removal of flywheel cover ,the Flywheel and start-up and the Removal of flywheel cover	

The ignition advance is electronicallydetermined on the basis of the parameters recognised by the controller. Forthis reason it is not possible to declare the reference values based on theengine rpm.
The ignition advance value is detectable any timeby the diagnostic tester dwg. 020460Y.
Using the stroboscopic lamp dwg. 020330Y it ispossible to check whether the ignition advance determined by the injectionsystem matches that actually started on the engine.

Proceed as follows: Remove the external transmission cover as described in the Automatic transmission chapter.	
- Remove the TDC reference inspection cap between flywheel and cover housing. See the Flywheel cover ? chapter.	
- By the driving pulley nut, turn the engine to find the alignment of the references to identify the TDC	
- Repeat the reference between driving pulley and transmission cover	
- Replace the inspection cap on the flywheel side. - Connect the diagnostic tester dwg. 020460Y.	

- Start the engine. - Select the menu on the "parameters" function. - Select the stroboscopic lamp control in the conventional 4-stroke engine position (1 spark 2 revolutions). - Check that the real values of rpm and ignition advance match those measured by the diagnostic tester.	

Ifthe values do not match, check:
- timing
- stroke-revolution sensor
- injection controller

- Loosen the 3 fastening screws. - Remove the intake manifold unit.	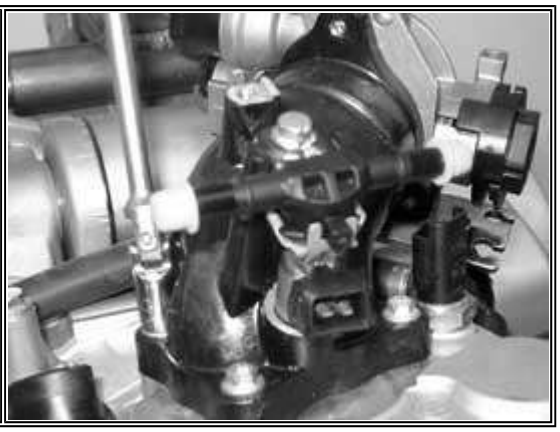

- Loosen the 6 special screws with abutment and the relevant rubber gaskets. - Remove the tappet cover with relevant gasket.	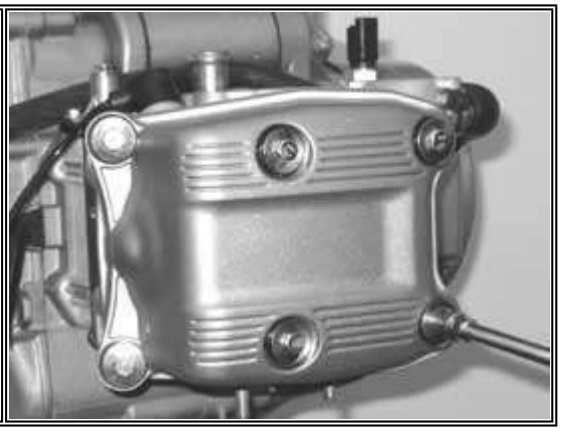

- Turn the engine to close the intake valves, i.e., moving the reference on the wheel speed sensor to the top, as shown in the figure.	
- Remove the central screw and the valve lifting device mass stop bell using the specific tool. Specific equipment and tools: Adjustable wrench 020565Y	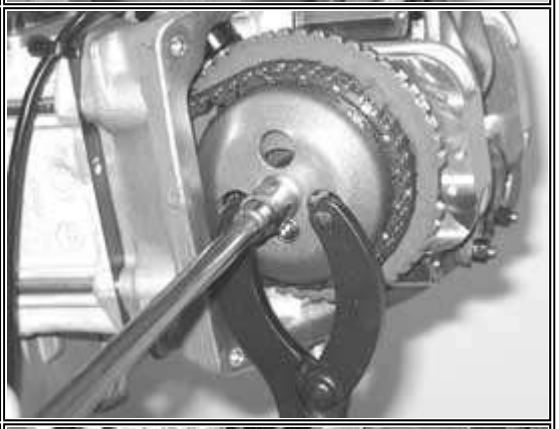
- Remove the return spring and the valve lifting mass with relevant travel end washer. N.B.: Be careful not to make washer and spring fall into the engine through the chain compartment.	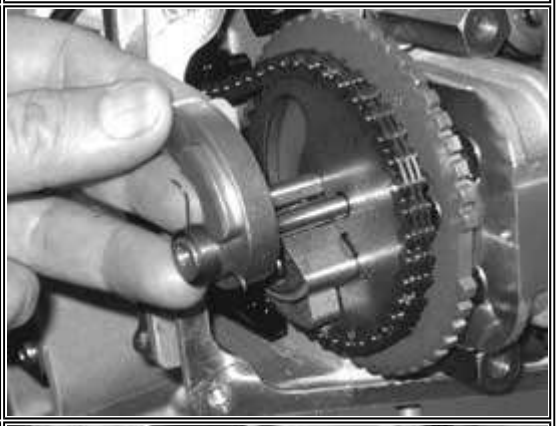
- Align the references located on the wheel speed sensor and on the head.	
- Loosen the tightener central screw. - Unscrew the 2 fastening screws and remove the tightener with relevant gasket.	

Remove the inside hexagon screw and the balance weight as shown in the figure.	
- Remove the timing belt rim from the camshaft. - Remove the timing belt rim.	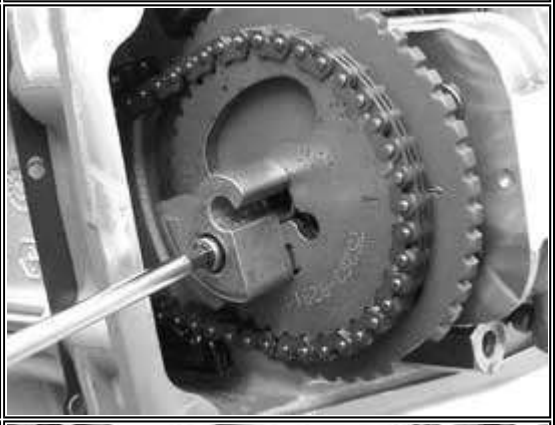
- Remove the wheel speed sensor.	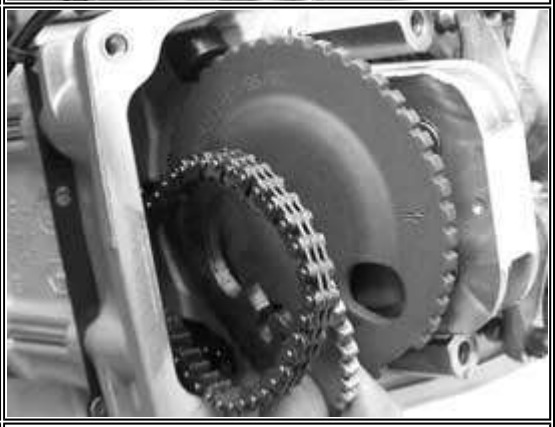
- Remove the engine stroke-revolution sensor and relevant O-ring by loosening the fastening screw and removing the fixing band from the special hole obtained on the head gasket. N.B.: To check this component, see the [9] Injection chapter.	

	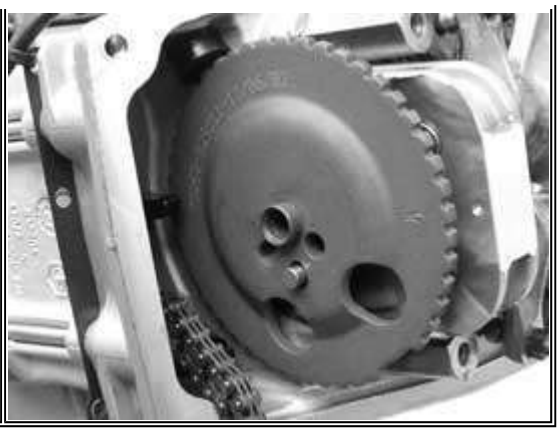

- Unscrew the 3 fastening screws and remove camshaft retain bracket. N.B.: Removing the fastening screws may be difficult. Be careful not to damage the inside hexagon. In case of need, separate the threads in advance.	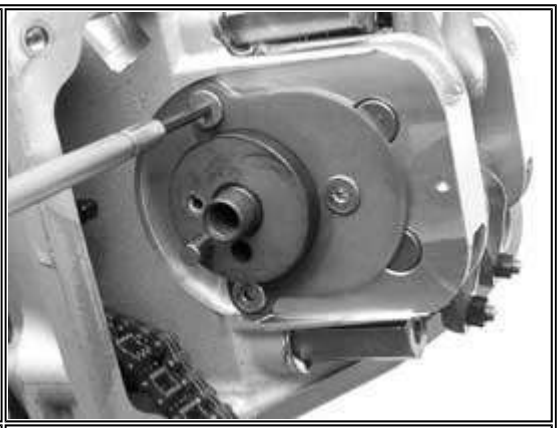
- Remove the camshaft.	
- Remove pins and rockers by the transmission side holes.	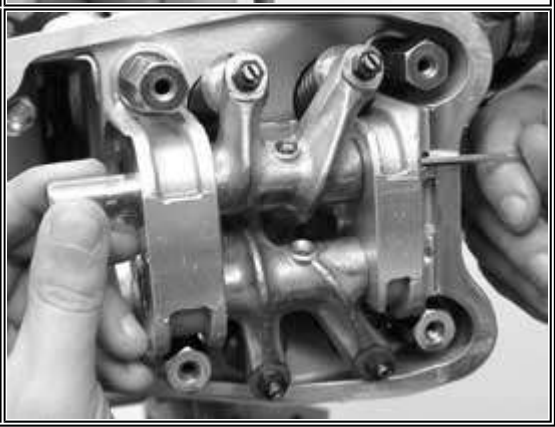

- Remove the spark plug. - Remove the cooling system outlet sleeve with thermostat.	
- Remove the cooling fluid temperature sensor. N.B.: The sensor controls both injection and the analogue instrument on the panel. To check this component, see the Injection Chapter.	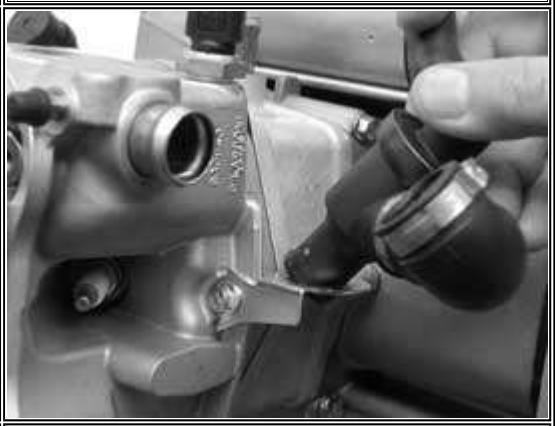
- Remove the 2 fastening nuts on the head, on the exhaust and on the intake side.	
- Remove the two M6 screws into the distribution channel and the M6 screw on the spark plug side with the thermostat support.	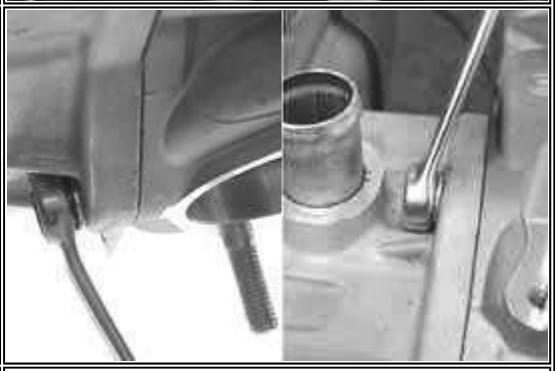
N.B.: In case of need, the head may be removed with the camshaft, pins, rockers and fixing bracket. - Loosen the 4 head-cylinder fastening nuts in 2 or 3 times and in a crossed sequence. - Remove the head, the 2 centering dowels, the gasket and the lower chain guide sliding block.	

N.B.: Do not remove the dowels if they are forced into their seat.	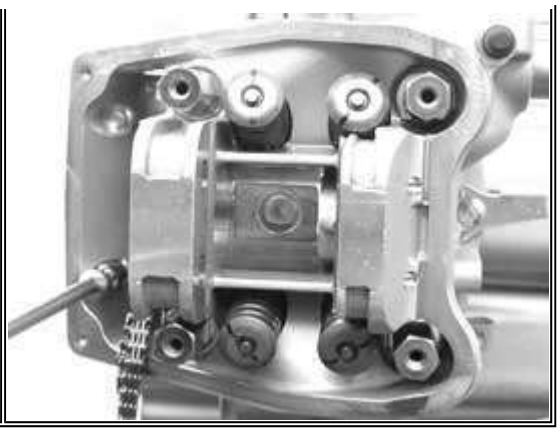

Caution:When you have to remove the head, prepare a suitable container since thethermal unit contains cooling fluid.

- Using the specific tool with adapter, remove half-cones, plates, springs and valves. Specific equipment and tools: Valve removing tool 020382Y Adapter 020382Y012	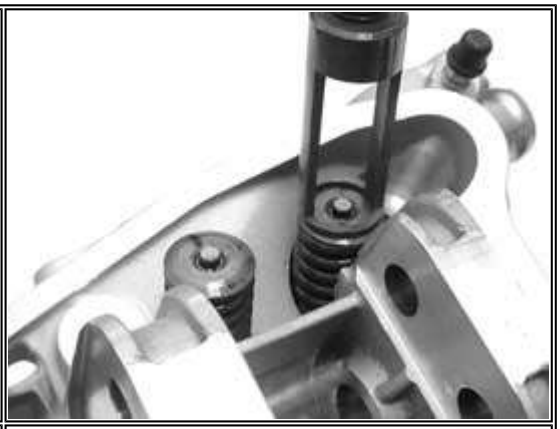
Caution :Arrange the valves so as to recognise the original position on the head (flywheel side and transmission side). - Remove the oil guards by the specific tool. Specific equipment and tools: Removing tool for oil guards 020431Y	
- Remove the spring supports. N.B.: Blow the seats with compressed air to? facilitate the spring support removal.	

- Remove the timing belt. - Loosen the fastening screw and remove the spacer and the tightening sliding block. N.B.: It is advisable to mark the chain in order to ensure that the initial direction of rotation is maintained.	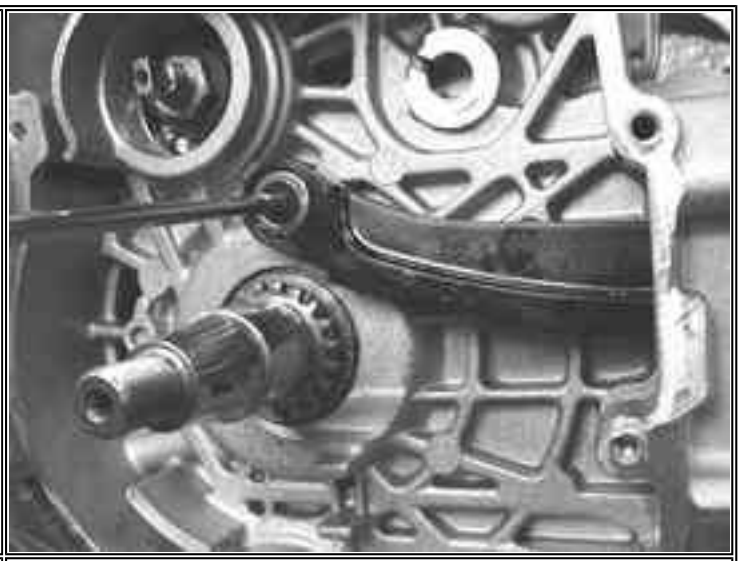
- Extract the cylinder with the relevant gasket and the centering dowel. N.B.: The second centering is ensured by a pin set into the cylinder. Caution: To prevent damages to the piston, support it while removing the cylinder.	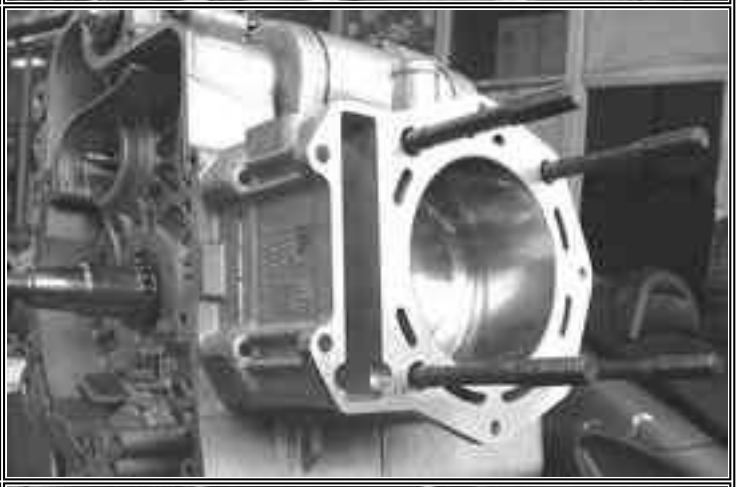
- Remove the 2 piston pin locking rings by the specific housings. - Extract the pin and remove the piston. N.B.: Close the cylinder housing mouth on the crankcase with paper or with a cloth to prevent slippage of one of the pin locking rings into the case.	
- Remove the piston sealing rings and the scraper ring. Caution ?Note the assembly positions of the linings to prevent inverting the position in case of reuse. N.B.: Be careful not to damage the sealing	

rings during removal.	

- Using a bore gauge, measure the connecting rod small end diameter. **Standard diameter:** 22 $^{+0,025+0,015}$ mm	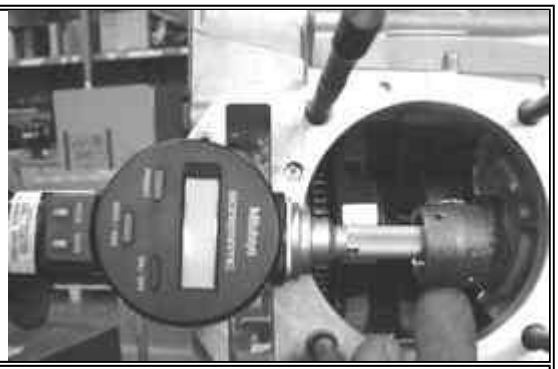
N.B.: If the connecting rod small end diameter exceeds the standard diameter, exhibits wear or overheating, proceed to replace the driving shaft as described in Chapter **Driving shaft oil sump**	

- Check the pin outside diameter by a micrometer. **Standard diameter: 22 ^{0} - $_{0,004}$ mm** - Calculate the coupling clearance between pin and connecting rod end. **Standard clearance:** **0,015 ~0,029 mm**	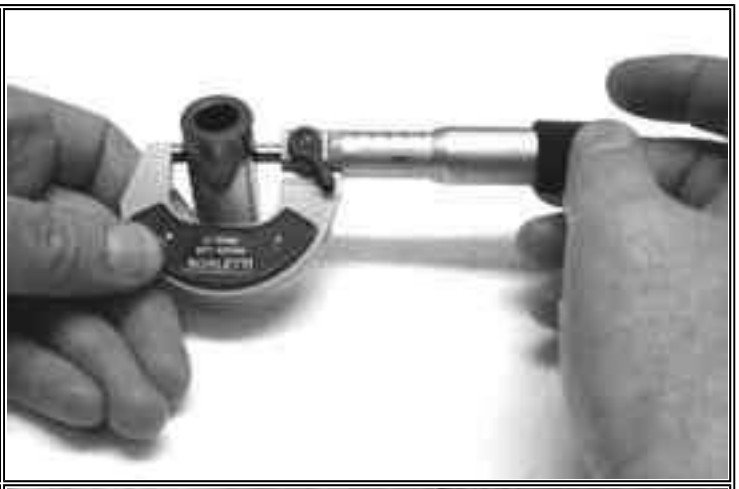
- Measure the capacity diameter on the piston. **Standard diameter: 22 $^{+}$ $_{0,006}$ $_{+0,001}$ mm** - Calculate the coupling clearance between pin and piston. **Standard clearance:** **0,001 ?0,010 mm** **N.B.:** The pin housings are provided with 2 lubrication channels. For this reason, measurement must be made according to the piston axis.	
- Measure the piston outside diameter according to a direction orthogonal to the pin axis. - Take the measurement in the position shown in the figure. **A = 43,2 mm** **Piston diameter: 92 mm**	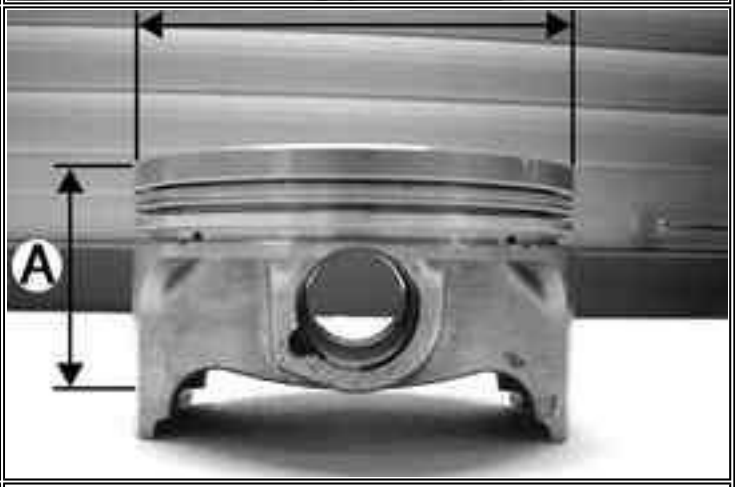
- Using a bore gauge, measure the cylinder inside diameter according to the directions shown in the figure at three different heights. **Standard diameter: 92 $^{+}$ $_{0,018}$ $_{+0,010}$ mm**	

- Check that coating is free from flakes.
- Check that the head matching surface exhibits no deformations or wear.

Maximum admissible out of plane: 0.05 mm

- Pistons and cylinders are classified into categories based on their diameter. Coupling is made in pairs (A-A, B-B, C-C, D-D).

- Carefully clean the sealing ring housings.
- Using suitable probes, measure the coupling clearance between sealing rings and piston housings, as shown in the figure.
- If higher clearance values than those reported in the table are measured, replace the piston.

N.B.: Measure the clearance by inserting the thickness gauge on the second sealing ring side.

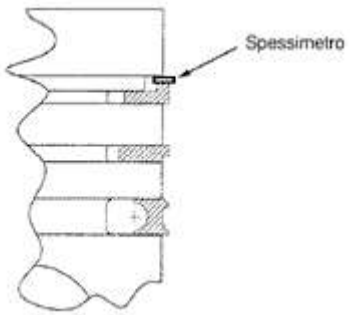

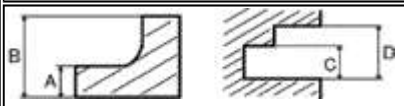

	Standard coupling clearance	Admissible clearance after use
First compression lining	A=0,9 $^{-0,005}_{-0,030}$ mm B=1,5 $^{-0,005}_{-0,03}$ mm	C=0,9 $^{+0,03}_{+0,01}$ mm D=2 $^{+0,05}_{-0,02}$ mm
Second compression lining	12 $^{-0,005}$ mm	1,25 $^{+0,03}$ mm
Scraper ring lining	2,5 $^{-0,005}$ mm	2,5 $^{+0,03}$ mm

- Alternately insert the 3 sealing rings into the cylinder in the zone where it has the original diameter. Insert the rings in orthogonal position into the cylinder axle, using the piston. - Measure the opening (see figure) of the sealing rings by a thickness gauge. - If higher values than those prescribed are measured, replace the linings.	

	Standard opening	Max value
Compression lining	0,15 ~0,35 mm	0,5 mm
Scraper ring lining	0,25 ~0,50 mm	0,65 mm
Scraper ring lining	0,25 ~0,50 mm	0,65 mm

N.B.: Before replacing the sealing rings, make sure thatthe prescriptions relating to the sealing ring - housings and piston - cylindercoupling clearances are respected. In any case, new sealing rings coupled witha second-hand cylinder may require adjustment conditions different fromstandard ones.

N.B.: The tool for installing the locking rings must beused manually.

Caution :Using a hammer may damage the lock housings.

- Fit piston and pin on the connecting rod, placing the piston with the arrow towards the exhaust.	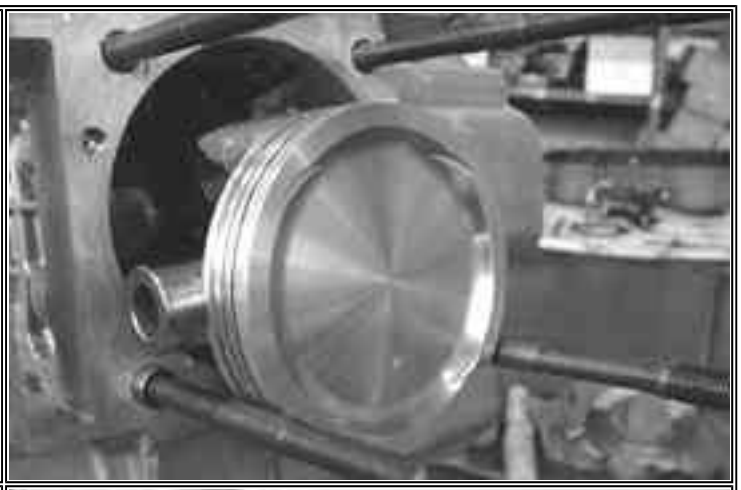
- Insert the locking ring into the specific tool, with the opening in the position indicated on the tool. S = left D = right	
- Move the locking ring into position by the punch.	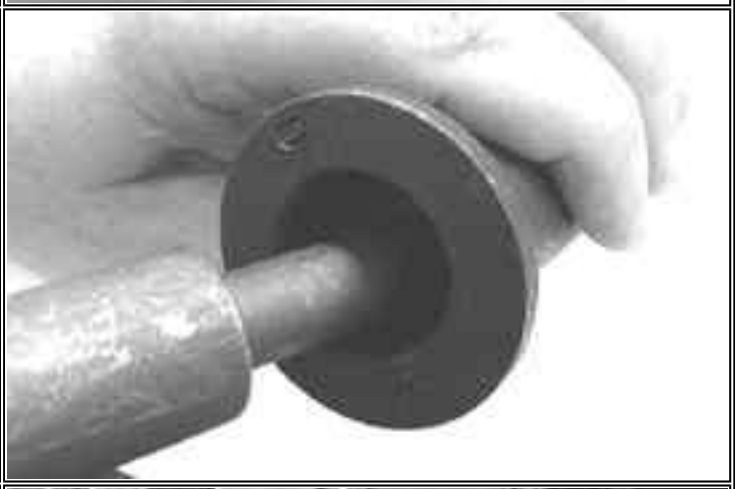
- Install the pin lock using the pin shown in the figure. Specific equipment and tools: Pin lock installation tool 020470Y	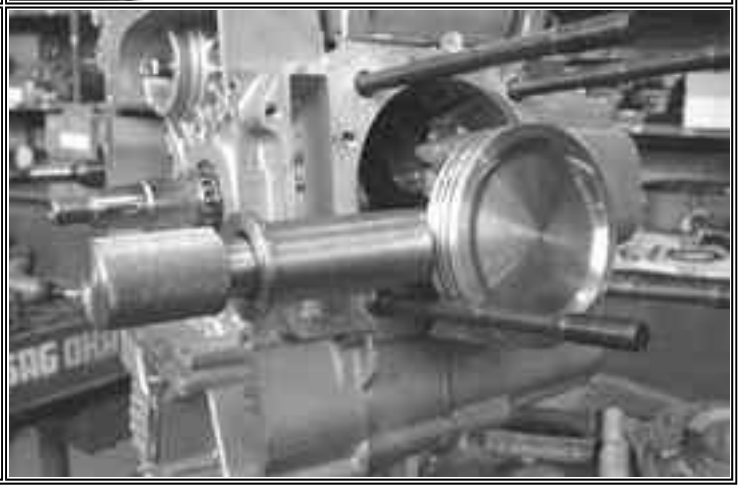

- Temporarily install the cylinder on the piston without base gasket.
- Install a comparator on the specific tool using the short union, as shown in the figure.

Specific equipment and tools:

Piston position check support 020475Y

- Using an abutment plane, reset the comparator with a pre-load of a few millimetres.
- Finally fix the comparator.
- Check the perfect sliding of the feeler pin.
- Install the tool on the cylinder without changing the comparator position.
- Lock the tool by the original head fastening nuts.
- Turn the driving shaft to the TDC (point of reversal of the comparator rotation).
- Measure the deviation from the reset value.

- Identify the thickness of the cylinder base gasket to be used for re-assembly by the table below. The proper identification of the cylinder base gasket thickness allows maintaining the correct compression ratio.
- Remove the specific tool and the cylinder.

N.B.: If deviations (or recesses or projections) close to the change of category are measured, repeat the measurement at the opposed side. To do so, repeat the tool installation by inverting its position.

Recess / Projection measured	Gasket thickness
- 0,185 ~- 0,10	0,4 ~0,05
- 0,10 ~+ 0,10	0,6 ~0,05
+ 0,10 ~+ 0,185	0,8 ~0,05

- Place the scraper ring lining spring on the piston. - Install the scraper ring lining keeping the opening opposed to the spring junction and with the writing "top" facing upwards. In any case, the chamfering must be arranged towards the piston top. - Fit the second lining with the identification letter or the writing "top" facing the piston top. In any case, the step must be facing opposite the piston top. - Install the first compression lining in the direction imposed by the housing. - It is advisable to use a fitter to facilitate the installation of the linings. N.B.: The 2 sealing linings have a conical surface of contact with the cylinder. This is to ensure a better adaptation. - Misalign the lining openings at 120 as shown in the figure. - Lubricate the parts with engine oil. - The engine uses the first compression lining with an L section.	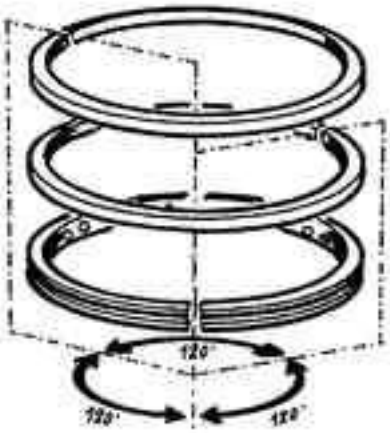 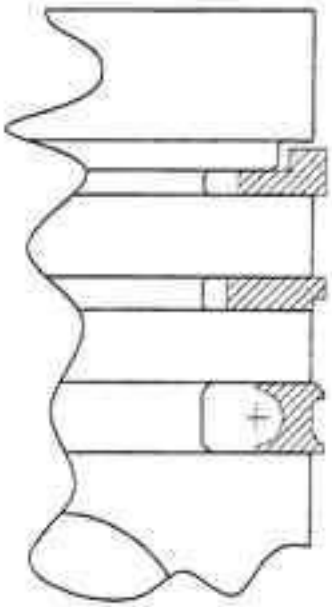

- Insert the cylinder base gasket with the thickness determined above. - Using the fork and the band clamp, install the cylinder as shown in the figure. Specific equipment and tools: Piston assembly band 020468Y Fork 020512Y	
N.B.: Before installing the cylinder, carefully blow the lubrication duct and lubricate the cylinder liner. Check the presence of the two reference dowels.	

- Using a rectified bar and a thickness gauge, check that the head surface exhibits no deformations or wear. Maximum admissible out of plane: 0.1 mm - In case of irregularities, replace the head. - Check the sealing surfaces for the intake and exhaust manifold. - Check that the camshaft and the rocker pin capacities exhibit no wear. - Check that the head cover surface is not worn. - Check that the cooling fluid sealing pad exhibits no oxidation.	

	Standard diameter
A	$13^{+0,018}_{0}$
B	$20^{+0,021}_{0}$
C	$42^{+0,025}_{0}$

- In case of irregularities, replace the headand check also the corresponding component.

- Visually inspect the valve sealing surface. Warning: Do not change the valve assembly position (RH-LH). - If the valve sealing surface is interrupted in one or more points, or it is bent, replace the valve.	

- Clean the valve seats of any carbon residues. - Using the Prussian blue, check the width of the?impression on the valve seat "V". - Measure the inside diameter of each valve guide. - Measure according to the rocker thrust direction at three different heights. Standard value: 1~1.3 mm Admissible limit: 1.6 mm	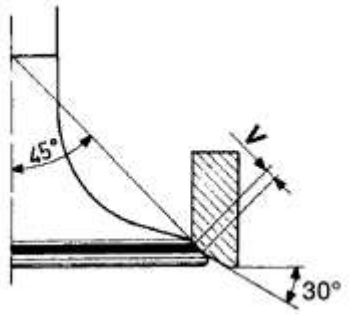
- If the impression width on the valve seat is larger than the prescribed limits, true the seats with a 45degree mill and then grind. - In case of excessive wear or damages, replace the head.	

- Check the valve stem diameter at the three points shown in the figure. Standard diameter Intake: 4.987 ~4.972 mm Exhaust: 4.975 ~4.960 mm Minimum admissible diameter Intake: 4.96 mm Exhaust: 4.945 mm - Calculate the clearance between valve and valve guide.	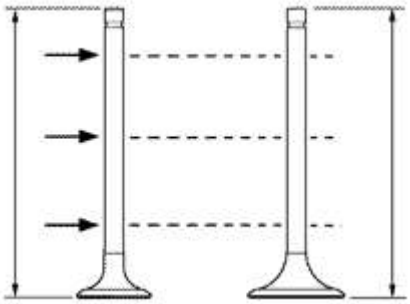
- Check the deviation of the valve stem by resting it on a "V" shaped abutment and measuring the extent of the deformation by a comparator. Admissible limit: 0.01 mm	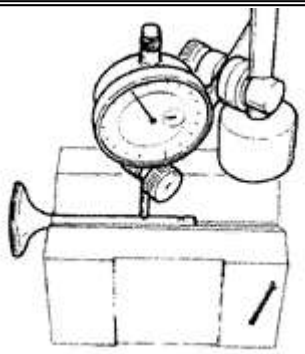
- Check the concentricity of the valve head by arranging a comparator at right angle relative to the valve head and rotate it on a "V" shaped abutment. Admissible limit: 0.03 mm	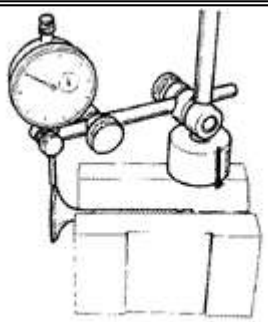

- After measuring the valve guide diameter and the valve stem diameter, check the clearance between guide and stem. Intake: Standard clearance: 0.013 ~0.04 mm Admissible limit: 0.08 mm Exhaust: Standard clearance: 0.025 ~0.052 mm Admissible limit: 0.09 mm	
- Check that the contact surface with the articulated register terminal is free from wear. Standard valve length Intake: 9**4**.**7~95.3** mm Exhaust: 9**3**.**9 ~94.5** mm	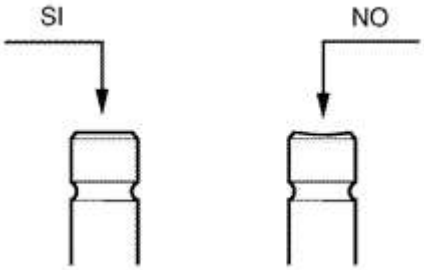
- If the checks above give no failures, you can use the same valves. To obtain better sealing performance, grind the valve seats. Perform this operation carefully using fine grain emery paste. While grinding, keep the head with the valve axes in horizontal position to prevent the emery paste residues from penetrating into the valve guide stem coupling (see figure).	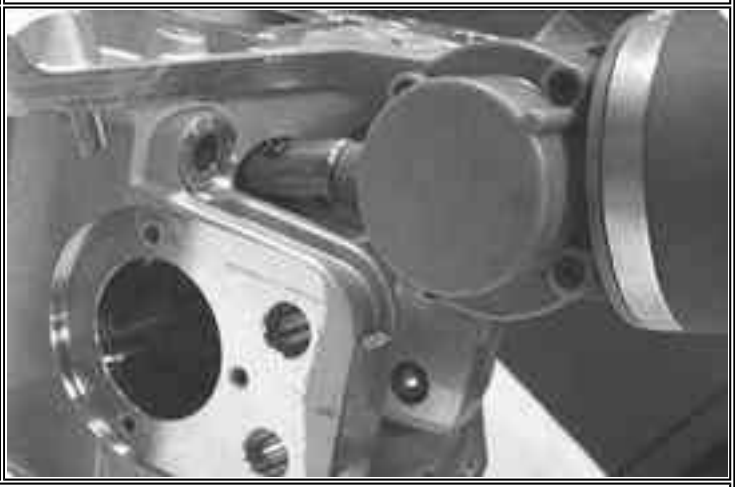
Warning: To prevent scratching the contact surface, do not force the valve rotation when the emery paste finishes. Carefully clean the head and the valves using a suitable product for the type of emery paste used. N.B.: Do not change the valve assembly position.	

- Insert the valves into the head. - Alternately test the intake and exhaust valves. - The test should be carried out by filling the manifold with fuel and checking that the head does not bleed from the valves, when pressed by your fingers only.	

- Check that the spring upper support plates and half-cones are free from irregular wear.	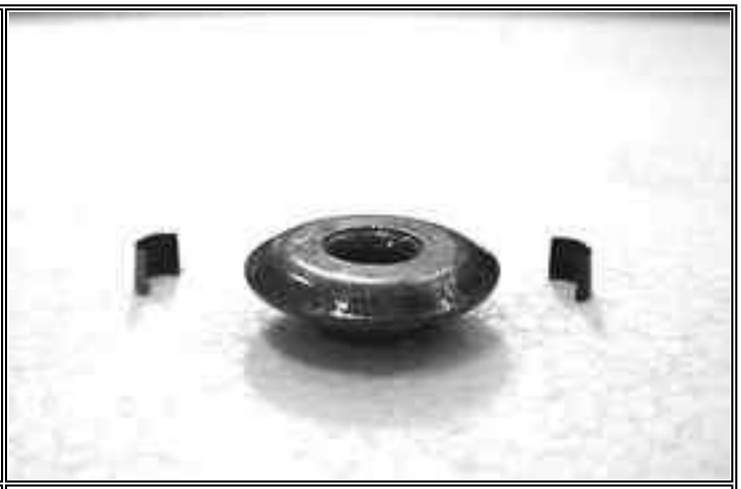
- Measure the free length of the spring. Standard length: 44.4 mm Admissible limit after use: 42.4 mm	

- Place the valve spring support plates on the head. - Alternately insert the 4 oil guards by the specific tool. - Lubricate the oil guards and the valve guides. Specific equipment and tools: Punch for installing oil guards 020306Y	
- Insert valves, springs and plates. - Using the specific tool provided with the special adapter, compress the springs and insert the half-cones into the relevant seats. Specific equipment and tools: Valve installation tool 020382Y Adapter 020382Y012	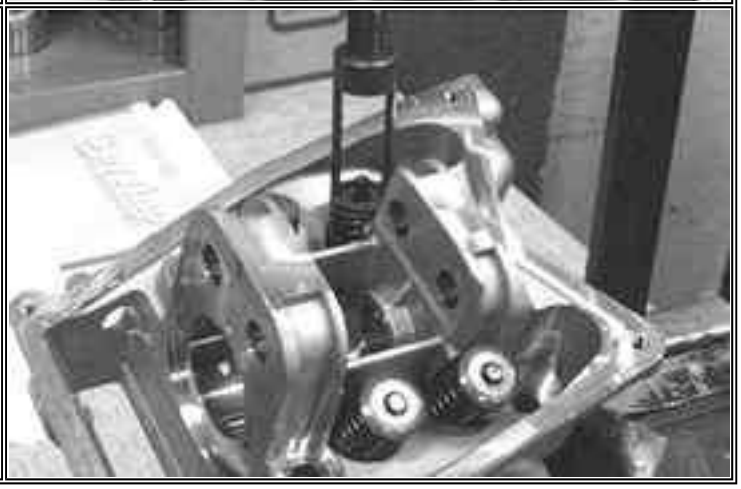

N.B.: Do not change the valve assembly position. Fit thevalves with the reference colour on the half-cones side (larger step curls).

- Check that the camshaft ends exhibit no scratches or irregular wear. - Using a micrometer, measure the camshaft capacity. Standard diameter Connection: **d** 42 $^{-0.060}_{+.085}$ mm Connection B :**d** 20 $^{-0.020}_{+.041}$ mm Minimum admissible diameter Connection A :**d** 41.910 mm Connection B: **d** 19.940	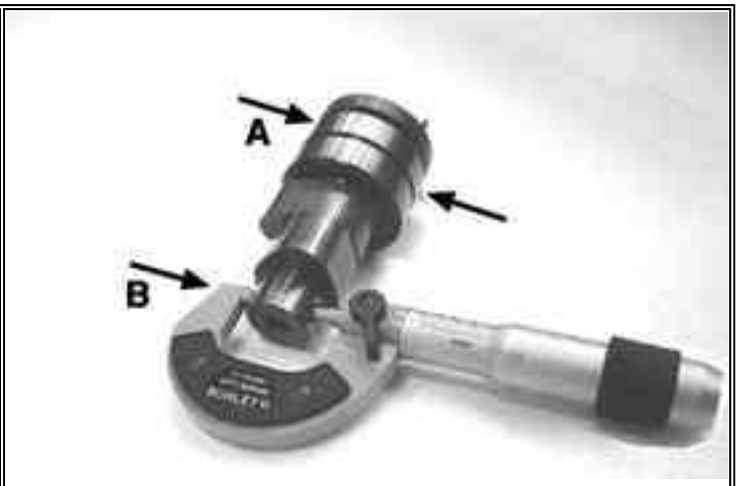
- Using a gauge, measure the cam height. Standard height Intake: 33.988 mm Exhaust: 33.417 mm Admissible limits Intake: 33.740 mm Exhaust: 33.170 mm Standard axial clearance: 0 ~0.22 mm Maximum admissible axial clearance: 0.3 mm	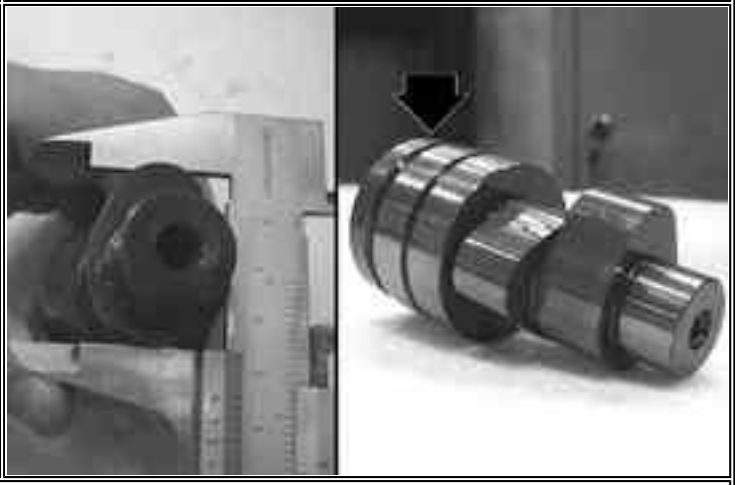
- If different values or wear than those prescribed are found, replace the faulty parts. - Check that the retain plate seat shown in the figure exhibit no wear.	
- Check that the automatic valve lifting device cam, the travel end roller and the rubber abutment on the containment bell are free from wear. - Check that the valve lifting spring has not yielded. - In case of wear, replace the worn parts.	
- Check that the rocker pins exhibit no scratches or wear. Standard diameter: **d**13 $^{-0.010}_{+.018}$ mm - Measure the inside diameter of each rocker. Standard diameter: **d**13 +0.026 +0.015 mm	

- Check that the cam contact sliding block and the articulated register plate is free from wear. - In case of wear, replace the component.	

- Check that the guide sliding block and the tightening sliding block are not too worn. - Check that the driving shaft pinion and the camshaft control timing rim unit exhibit no wear. - In case of wear of the sliding blocks, replace them. In case of wear of the chain or rim, replace the entire unit.	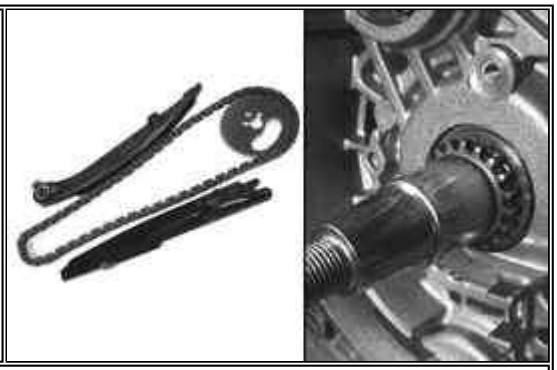
N.B.: If the chain has damaged the pinion, replace the driving shaft as described in Chapter (Driving shaft oil sump)	
- Remove the central screw with the washer and the tightener spring. Check that the unidirectional gear is not worn. - Check the integrity of the tightener spring. - In case of wear, replace the entire assembly.	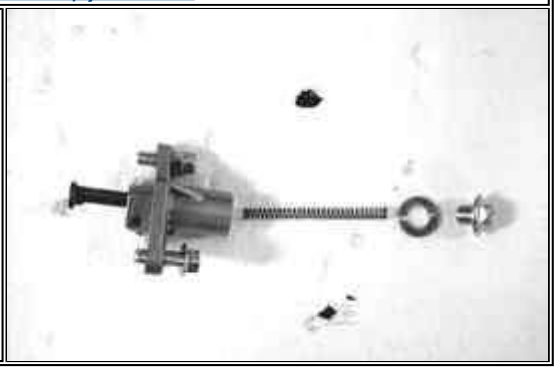

- Insert the chain guide sliding block. - Insert the two centering dowels between head and cylinder. - Install the head gasket.	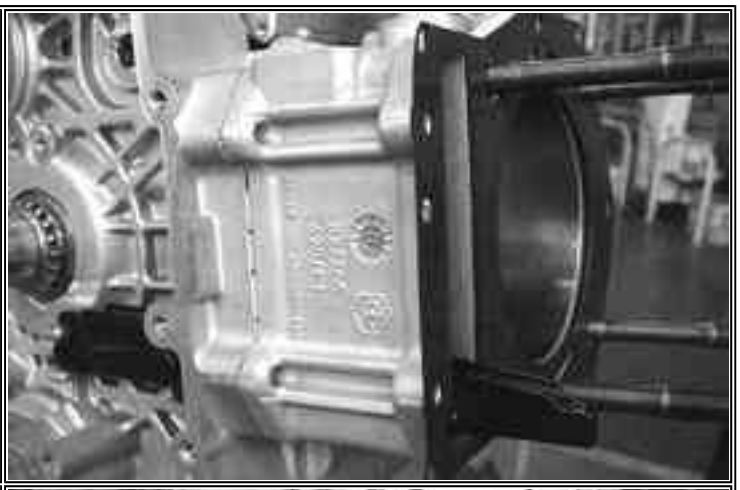
N.B.: The figure shows the insertion position of the two centering dowels between head and cylinder. The direction of installation for the gasket is forced by the dowels. The head gasket is made of steel and has a standard thickness.	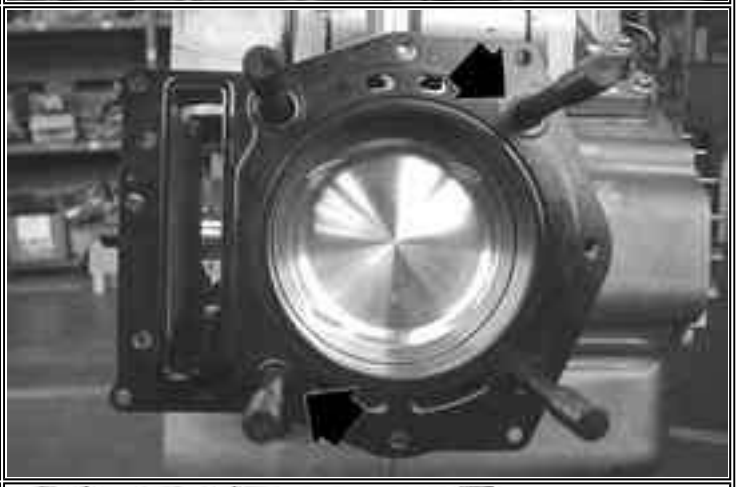
- Check that the head lubrication channel is perfectly clean. Clean with compressed air jets, if required. - Insert the head. - Lubricate the stud bolts and the 4 fastening columns.	
Tighten the 4 fastening columns in a crossed sequence as shown in the figure, at a torque of 7 Nm. - Tighten the 4 screws by 90 degree in the sequence shown in the figure. - Further tighten by 90?in the sequence shown in the figure. **Tightening torque:** **Head fastening columns:** **7 N**m	

	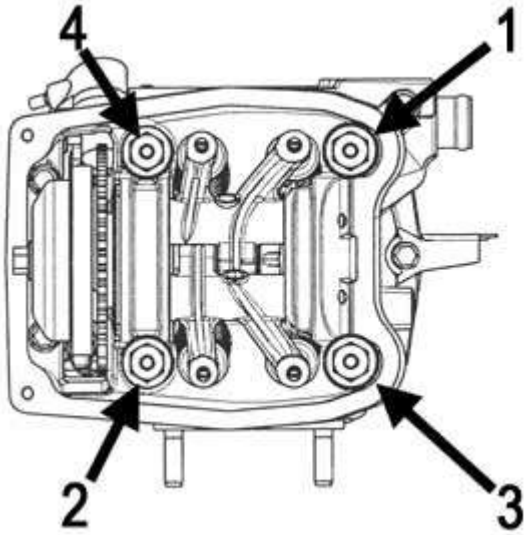
- Tighten the 2 fastening nuts on the exhaust and on the intake side at the prescribed torque. **Tightening torque:** **Exhaust / intake head fastening nuts: 10 ~12 N**m	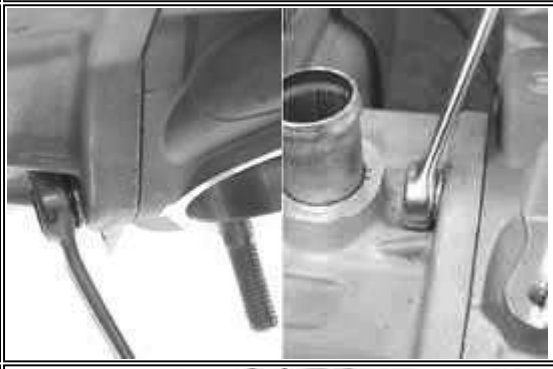
- Tighten the 3 side screws at the prescribed torque. **Tightening torque:** **Head fastening screws: 10 ~12 N**m	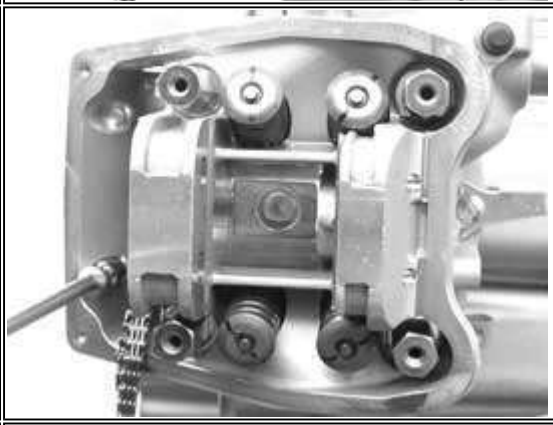
- Install the cooling fluid temperature sensor with the washer and tighten at the prescribed torque. **Caution** - Failure to observe the tightening torque can damage the sensor. **Tightening torque:** **Cooling fluid temperature sensor:** **10 ~12 N**m	

- Install the spark plug and tighten at the prescribed torque. **Tightening torque:** **Spark plug: 12 ~14 N**m	
- Insert the timing control belt on the driving shaft according to the initial direction of rotation. - Insert the tightening sliding block with the relevant spacer, tightening the fastening screw at the prescribed torque, using Medium Thread-braking LOCTITE type 243. **Tightening torque:** **Tightening sliding block fastening screw: 10 ~14 N**m	
- Insert pins and rockers on the flywheel side. - Lubricate the 2 rockers through the top holes.	
- Clean the camshaft by blowing with little compressed air jets, especially the retaining plate housing. - Lubricate the 2 ends. - Insert the camshaft into the head with the cams opposite the rockers.	
- Remove any residues of LOCTITE from the camshaft retain bracket fastening screws by a brush. - Apply LOCTITE 243 to the fastening screws and remove any residues of previous thread products. - Insert the camshaft retain	

bracket with visible countersinks and tighten the 3 fastening screws at the prescribed torque, being careful not to damage the inside hexagon. **Tightening torque: Camshaft retaining bracket fastening screws: 4 ~6 N**m	
- Check that the toothing and the housing of the wheel speed sensor timing peg are free from deformations or dents.	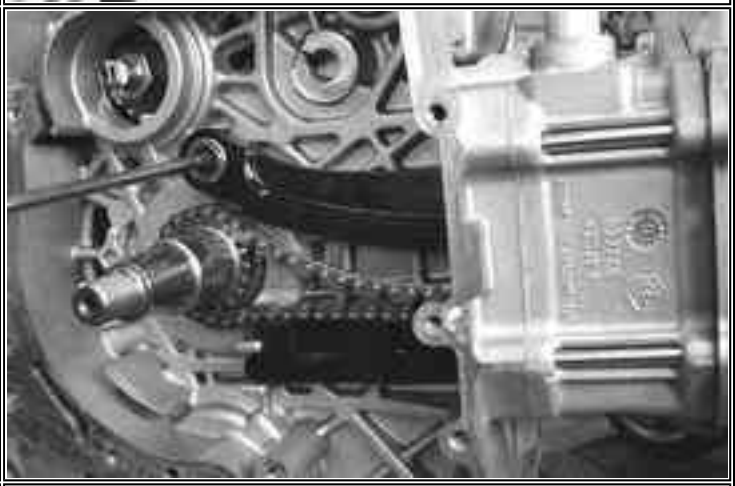
- Insert the wheel speed sensor on the camshaft keeping the stroke reference visible.	
- Install the engine stroke-revolution sensor using a new O-Ring, orientating it as shown in the figure. Tighten the 2 fastening screws at the prescribed torque. **N.B.:** To check this component, see Chapter 9 - Injection. **Tightening torques: Stroke revolution sensor fastening screws: 3 ~4 N**m	

- Install the intermediate gear with torque limiter, the flywheel and its cover, as described in Chapter 6-Flywheel and start-up system, and in Chapter 5-Flywheel cover. **N.B.: For more convenience, install the flywheel cover without the cooling system sleeves.**	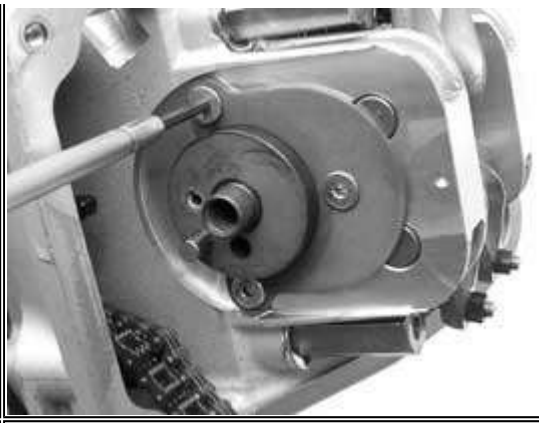
- Using the TORX wrench, remove the timing check cap.	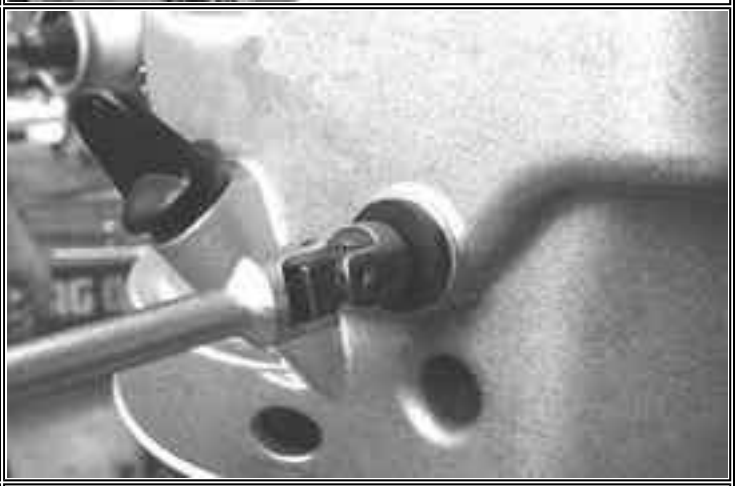
- Align the wheel speed sensor references with the head as shown in the figure.	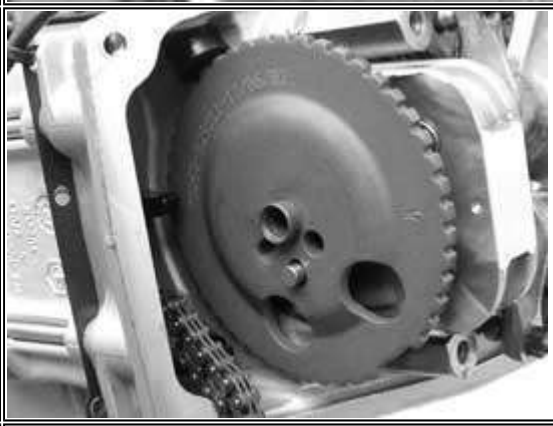
- Keeping the belt slightly pulled, turn the driving shaft by the driving pulley to make the reference located on the magnet support collimate with that on the flywheel cover.	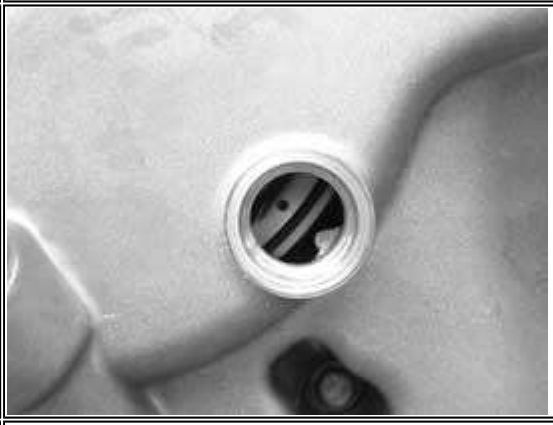
- Insert the belt on the camshaft control timing rim. - Insert the timing rim on the camshaft checking that the references are aligned.	

N.B.: During the stroke check, keep the belt tensioned by pressing on the tightener compartment side.	
- Install the balance weight mass. - Centre using the bell fastening screw. - Tighten the mass fastening screw at the prescribed torque, using LOCTITE 242. **Tightening torque:** **Balance weight mass fastening screw:** **7 ~8.5 N**m	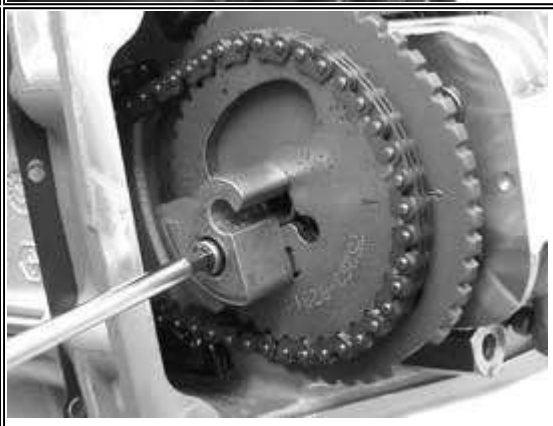
- Remove the central screw. - Install the valve lifting mass being careful to the proper positioning of the travel end ring. - Lubricate the mass and de-compressor control pin.	
- Install the return spring and load it by about 3/4 turn.	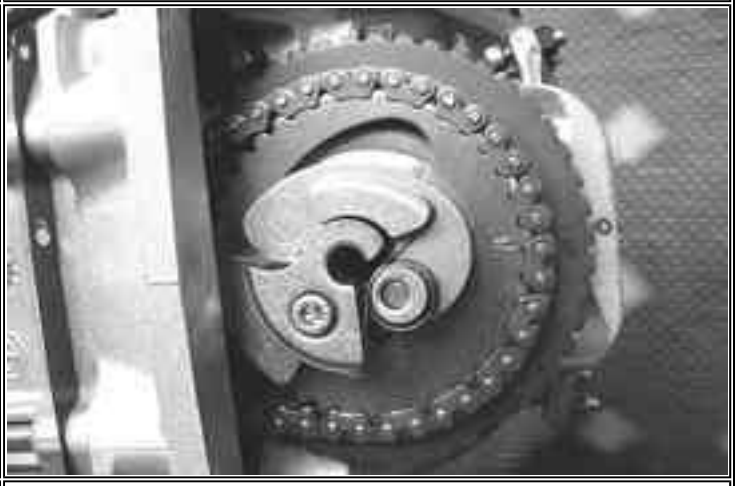
- Turn the engine to move the references to the top as	

shown in the figure (intake end).	
- Insert the valve lifting device mass stop bell. - Tighten the fastening screw at the prescribed torque, using LOCTITE 243. **N.B.:** The bell timing is ensured by the balance weight mass fastening screw head. - Check that the decompression mass is free and that it is pulled by the spring. **Tightening torque: Valve lifting device mass stop bell fastening screws: 30 ~35 N**m	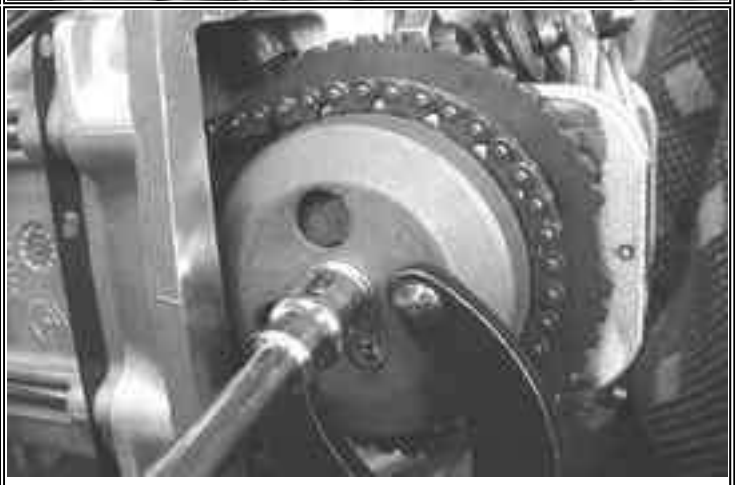
- Place the engine with the valve clearance adjustment timing references aligned with the head. - Check the clearance between valve and rocker using a thickness gauge. **Prescribed clearance:** **intake 0.15 mm (with cold engine)** **exhaust 0.15 mm (with cold engine)** - In case of different values, adjust by loosening the lock nut and using a screwdriver for the adjuster, as shown in the figure.	

- Loosen a tooth of the wheel speed sensor with the stroke-revolution sensor. - Check the air gap using a probe. Standard air gap: from 0.20 to 0.70 mm - Repeat the check at 3 ~4 points.	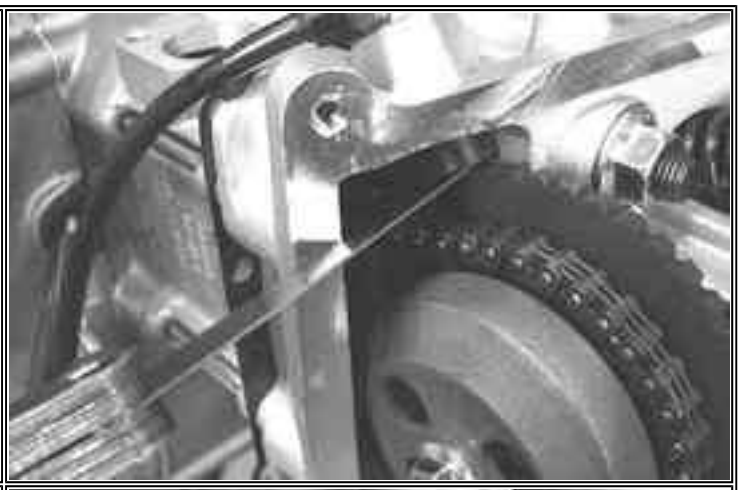
- Place the tightener cursor in the rest position, keeping the retain tab pressed.	
- Install a new tightener on the cylinder using a new gasket. - Tighten the two fastening screws at the prescribed torque. Tightening torque: Tightener fastening screws: 11 ~13 Nm	
- Insert the spring with the central screw and the washer. - Tighten the central screw at the prescribed torque. Tightening torque: Tightener screw: 5 ~6 N m	

- Check that the gasket is in good working order.	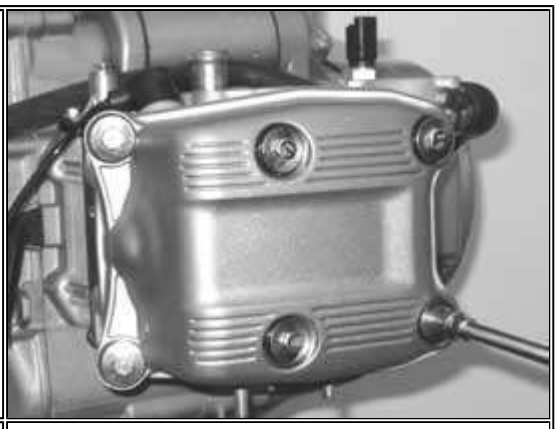
- Tighten the two screws indicated in the figure with 1 and 2 to limit the reciprocal sliding of the cover surface with the head surface. - Tighten the remaining 4 screws in a crossed sequence (3,4,5,6). **N.B.: Check the proper position of the gasket.** **Tightening torque:** **Tappet cover fastening screws:** **7 ~9 N**m	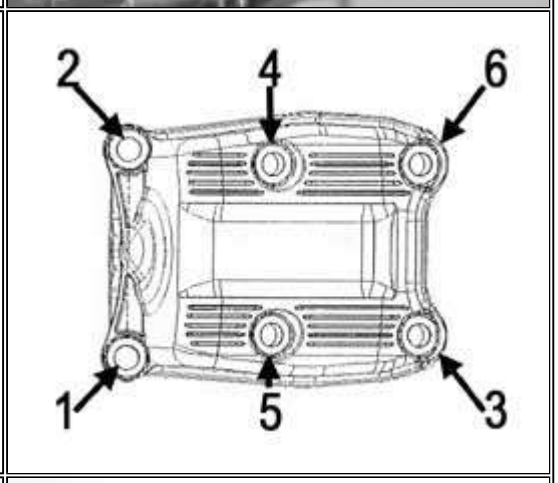
- Install the transmission cover and the relevant net filter and the outside transmission cover as described in the(Automatic transmission chapter.	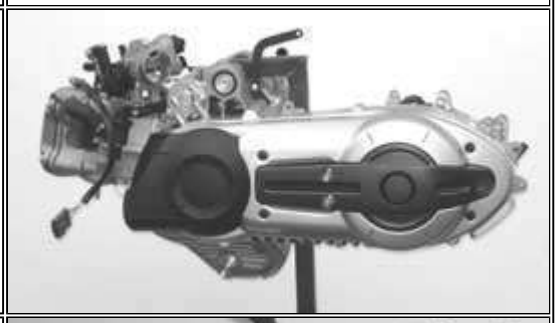
- Install the cooling system sleeves using new bands, as described in the(Flywheel cover chapter.	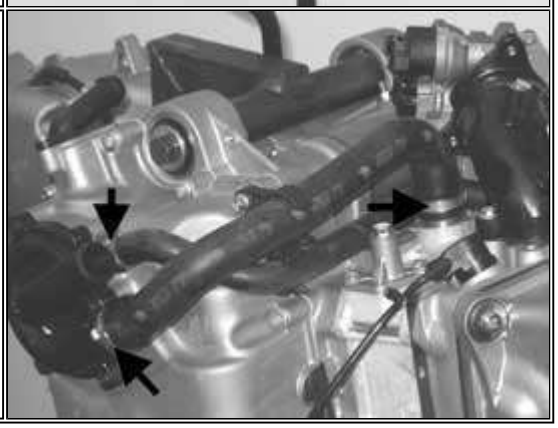

This section describes the operations to be carriedout on the manifold

N.B.: The throttle body is an assembly that includes several compartments and is only supplied as an assembly. To check this component, see the [9] Injection chapter. - Remove the 3 fastening screws shown in the figure.	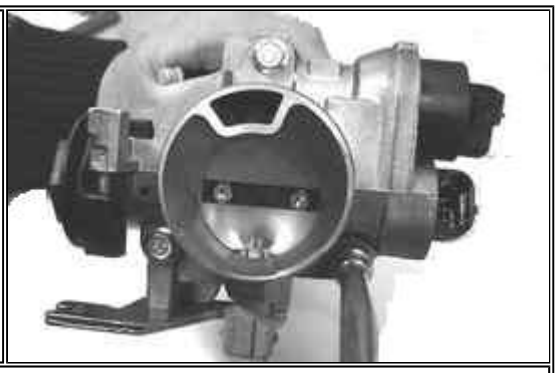
Warning**:**The throttle body is pre-calibrated at the plant. Do not tamper the valve abutment register. The register is sealed to prevent tampering. For idle-related problems, see the [**9**] Injection **c**hapter. N.B.: The throttle body can be removed with manifold installed on the engine or removed from the same.	
- Check that the sealing lips on the matching surfaces between throttle body and manifold and head and manifold are in good working order. Caution **:**Air leaks may affect the injection system performance, especially with idling engine.	
- Carefully check that the gas valve and relevant duct are clean. - Check that the additional air channel managed by the stepper motor is clean.	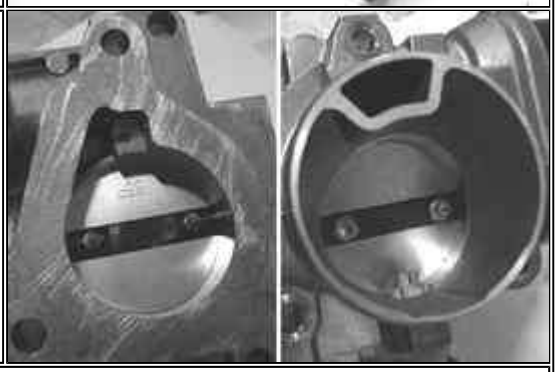
N.B.: If the throttle body is replaced, reset the T.D.C. and the CO % adjustment. Once you have restored the engine, check that the CO % value at idling is within the prescribed values. If the CO % is not conforming, calibrate as described in chapter "Adjusting carburetion at idle speed".	

- Perform the operations for removal in the reverse order, tightening the 3 fastening screws at the prescribed torque. Tightening torque: Throttle body fastening screws: 11 ~13 Nm	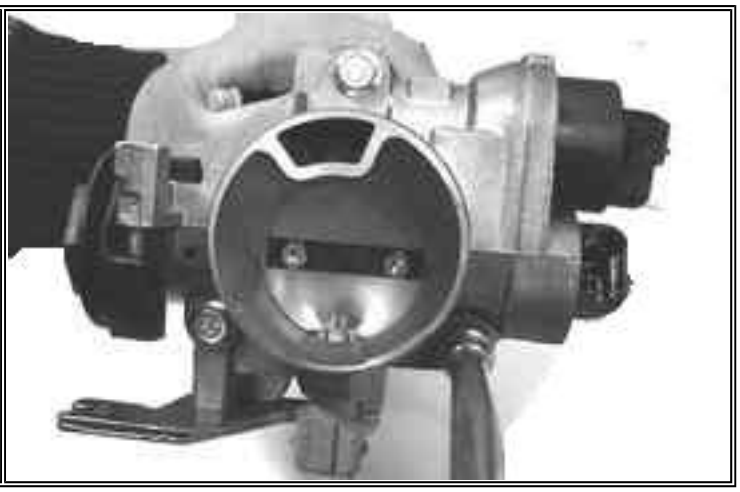

- Install the intake manifold on the engine. - Insert the 3 fastening screws, one of which with a support band for the cooling system sleeve, and tighten at the prescribed torque. Tightening torque: Intake manifold fastening screws: 11 ~13 Nm	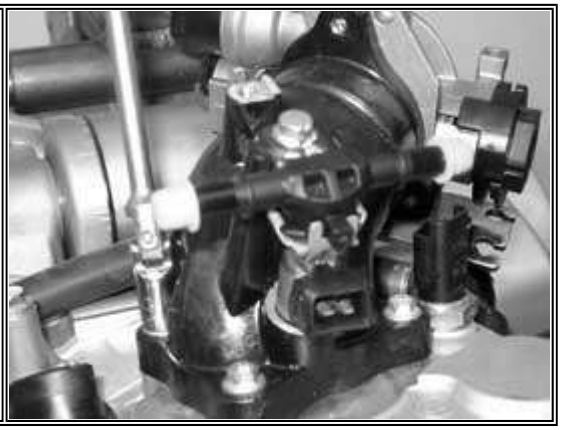

DRIVING SHAFT CRANKCASE

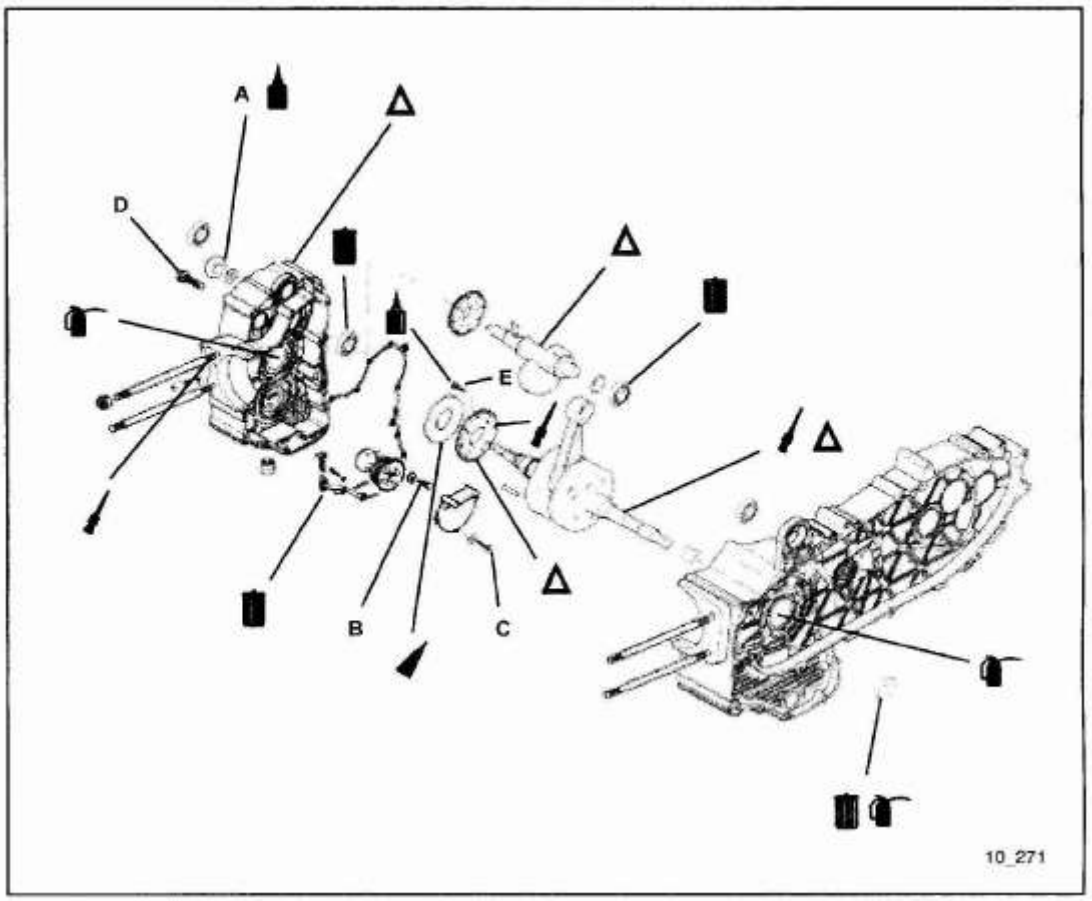

LUBRICATE WITH OIL

LUBRICATE WITH GREASE

APPLY PRODUCT

CLEAN CAREFULLY

CAUTION: HANDLE WITH CARE

ALWAYS REPLACE

REFERENCE	A	B	C	D	E	F	G	H	I	L	M	N	O
QUANTITY	1	2	2	14	4								
TORQUE N m	25?9	5?	8?0	10?2	10?2								

- Remove the outside and inside transmission cover and the complete driving pulley as described in (Automatic transmission	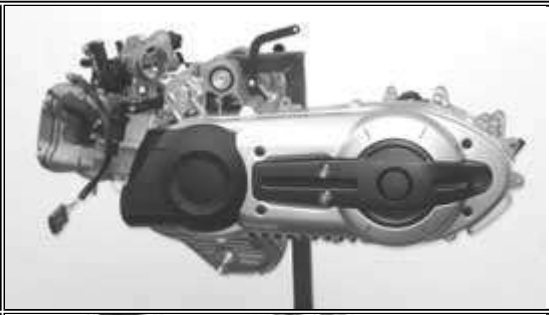
- Remove the flywheel cover with the cooling system sleeves, as described in the (Flywheel cover chapter.	
- Remove the magneto flywheel with start-up control as described in the (Flywheel and startup chapter.	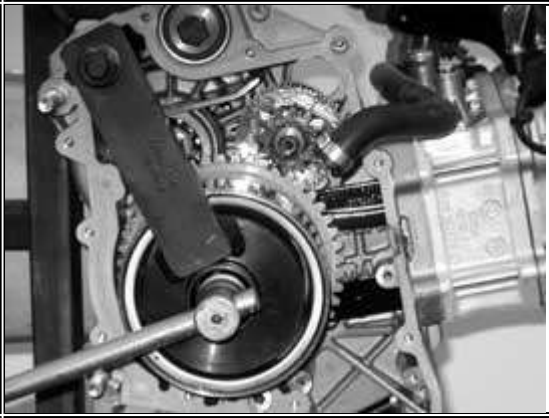
- Remove the thermal unit (cylinder, head, piston) as described in the (Thermal unit and timing system) chapter.	

- Before opening the engine crankcase, check the driving shaft axial clearance. To this purpose, use a plate (e.g. the specific tool) and a support with specific tool comparator.	

Specificequipment and tools:

Crankcasedetachment plate 020262Y

Magneticbase with comparator 020335Y

Standardclearance: 0.10 ?0.50 mm

Admissibleincrease limit after use: 0.60 mm

- Higher clearance denotes wear of the crankcasedriving shaft rest surfaces.
- For a correct measurement, fully recover theclearance in both directions by operating between crankcase and engine.

- Remove the engine support retain screw on the flywheel side half-crankcase.	
- Remove the 14 crankcase coupling screws. N.B.: The fastening screws are of 3 different lengths. Note their correct position.	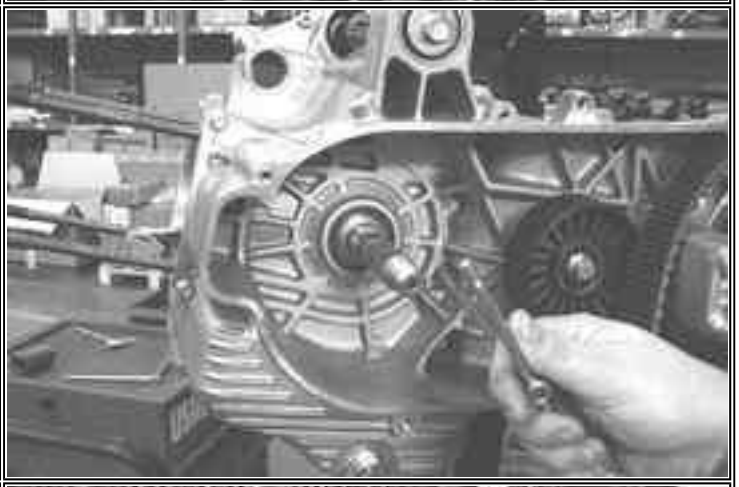
- Split the crankcases while keeping the driving shaft inserted on the flywheel side half-crankcase. - Remove the coupling gasket. N.B.: The bushing support can be left in the flywheel side half-crankcase.	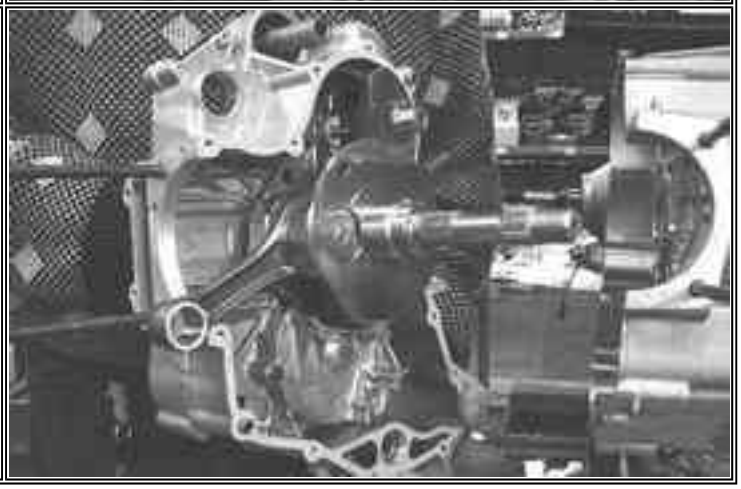

- Before removing the driving shaft, check the timing with the counter-shaft. To carry out this check, turn the driving shaft to align the two holes obtained on the driving shaft with the hole on the counter-shaft control gear. This is an optimal position also to remove the driving shaft.	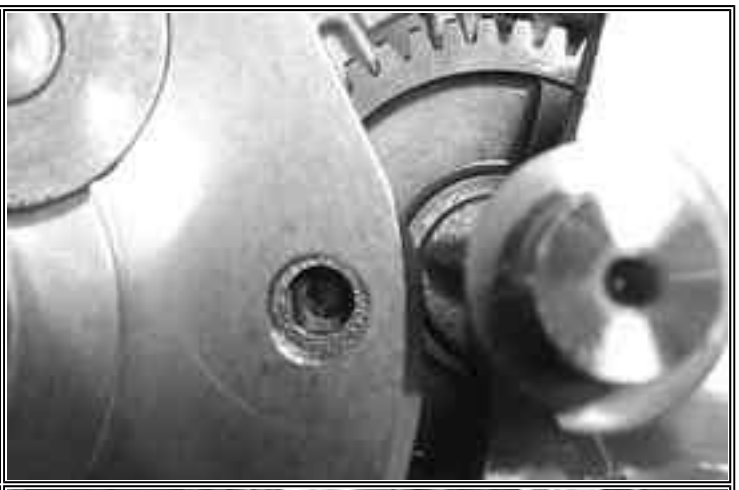
- Remove the driving shaft with the shim adjustment washer on the flywheel side. Caution ?While opening the crankcase and removing the driving shaft, check that the shaft threaded ends do not interfere with the bench brasses. Failure to observe this precaution can damage the bench brass.	
Removal of the oil pump and counter-shaft control gear. - To remove the control gear, loosen the 4 fastening screws. N.B.: The screws have a countersunk head and their threading is locked by LOCTITE. Be careful not to damage the control hexagon. To obtain better results it is preferable to use an inside hexagon socket wrench. Remove the gear only if actually required.	

- Place the specific tool as shown in the figure. Specific equipment and tools Counter-shaft lock wrench: 020479Y	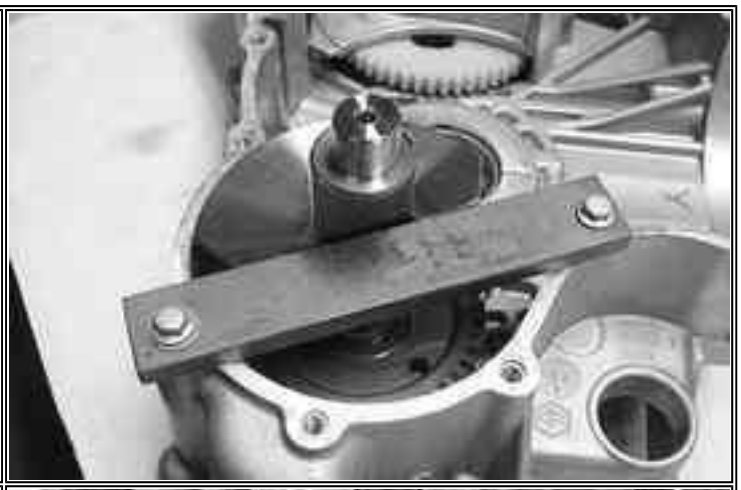
- Remove the fastening nut with relevant washer.	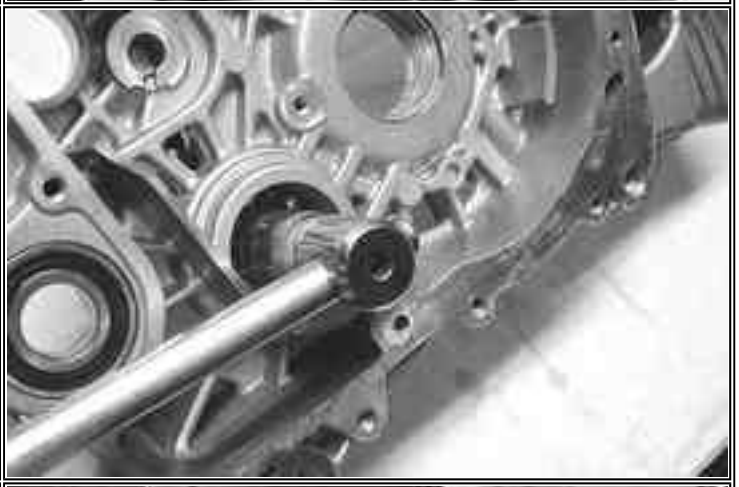
- Remove the specific tool and extract the counter-shaft with the control gear.	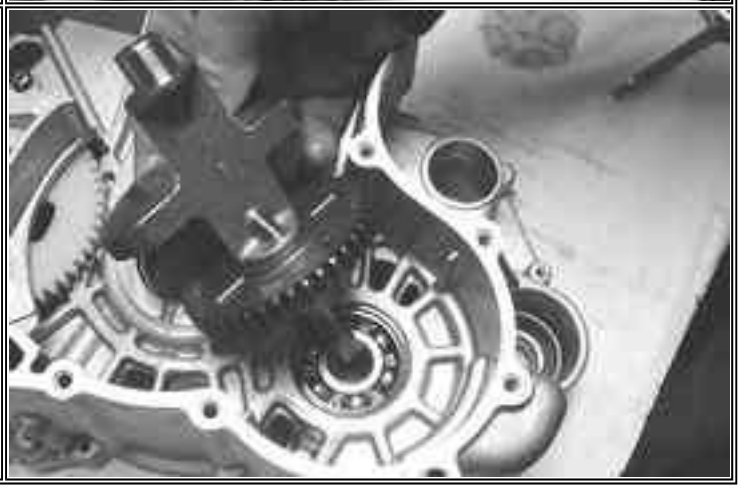

- Remove the oil pump compartment closing plate by loosening the 2 fastening screws with the relevant washers.	
- Remove the oil pump with the gear, loosening the 2 fastening screws, through the slits obtained on the gear.	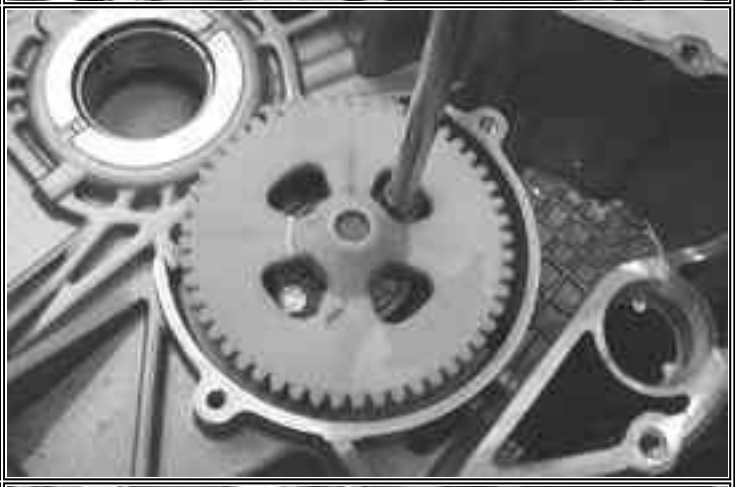
- Remove the gasket.	

- Check that the bearings are free from irregular noise or clearance. Replace them, if necessary. Flywheel-side half-crankcase - Remove the inside snap ring.	
- Upturn the half-crankcase. - Remove the bearing from the flywheel side half-crankcase by the specific tool and a mallet. Specific equipment and tools: Handle for punches 020376Y Adapter 37x40 mm 020358Y 17-mm guide 020439Y	
- Remove the bearing from the transmission side half-crankcase by the specific tool. Specific equipment and tools: Pliers 001467Y008 Bell 001467Y007	
- Before installing a new bearing, heat the flywheel side half-crankcase by the specific tool. - Place the half-crankcase on a wooden base. Specific equipment and tools: Heater 020151Y	

- Insert a new bearing on the specific tool after greasing the guide seat. - Install the new bearing on the half-crankcase by the specific tool. N.B.: If a bearing with plastic cage is used, keep the balls visible from the crankcase internal side. Specific equipment and tools: Handle for punches 020376Y Adapter 42x47 mm 020359Y 17-mm guide 020439Y	
- Install the snap ring.	
- Before installing the new bearing on the transmission side crankcase, heat the seat by the specific tool. Specific equipment and tools: Heater 020151Y	
- Insert a new bearing on the specific tool after greasing the guide seat. - Install the new bearing on the engine crankcase by the specific tool. N.B.: If a bearing with plastic cage is used, keep the balls visible from the crankcase internal side.	

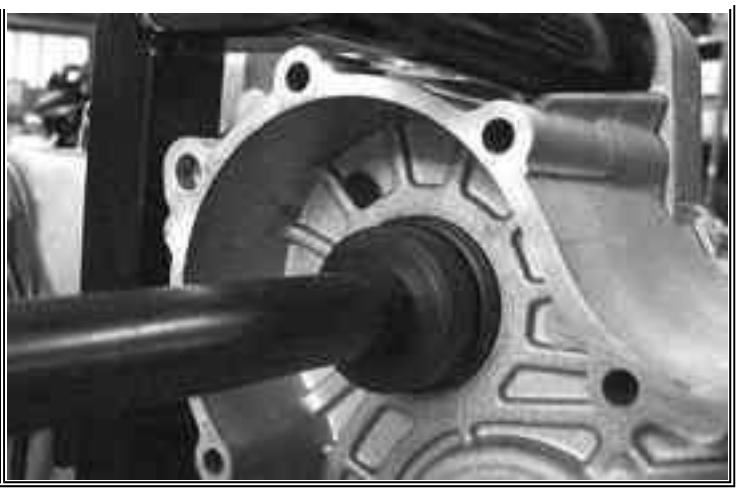

Specificequipment and tools:
Handlefor punches 020376Y
Adapter42x47 mm 020359Y
17-mmguide 020439Y

- Check the connecting rod axial clearance.

Standard clearance:

0.20 ~0.40 mm

- Check the connecting rod diametrical clearance.

Standard clearance:

0.046 ~0.076 mm

- Check that the axial clearance containment surfaces exhibit no scratches; using a gauge, check the driving shaft width as shown in the figure.

N.B.: Be careful not to let the measurement be affected by the unions with the driving shaft ends.

Standard measures:

63.6 ~63.45 mm

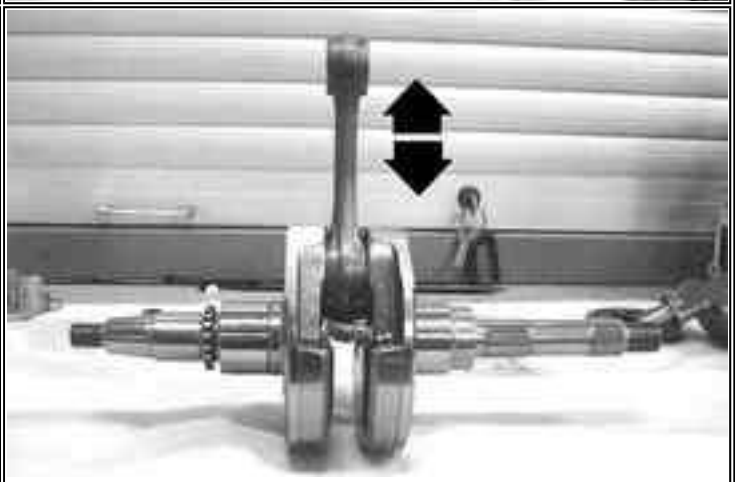

Caution ?The driving shaft can be reused when the width falls within the standard values and the surfaces are free from scratches.

Shim adjustment to a given clearance

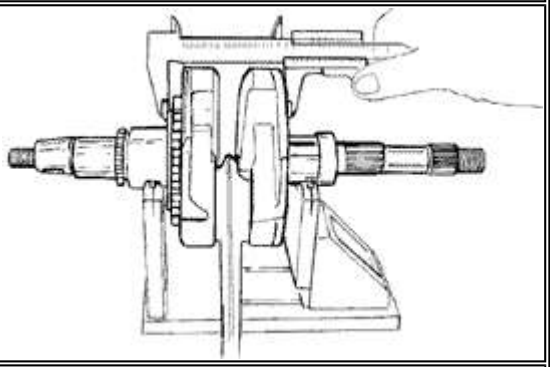

- Check the overall height of the driving shaft ?shoulders ?gear assembly.

Standard thickness: 71.804 ~72.000 mm

- Check that shim adjustment is free from scratches.

N.B.: In case of reuse, keep the initial assembly position.

Specific equipment and tools:

Driving shaft check support 020074Y

- If the driving shaft ?crankcase axial clearance is higher than the standard value and the driving shaft exhibits no irregularity, the problem is caused by wear or by a wrong machining on the engine crankcase.

- Check the diameters of both the driving shaft ends according to the axes and planes shown in the figure. Half-shafts are classified into

two categories, Cat. 1 and Cat. 2. See the table below.

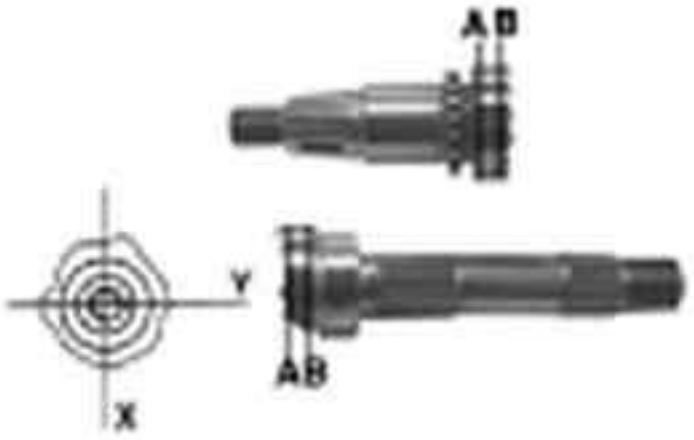

	Standard diameter
Cat. 1	40,010 ~40,016
Cat. 2	40,016 ~40,022

- Install the driving shaft on the support and measure the displacement at the 4 points shown in the figure.

Specific equipment and tools:

Driving shaft check support 020074Y

Max admissible displacement:

A= 0.15 mm

B= 0.01 mm

C= 0.01 mm

D= 0.10 mm

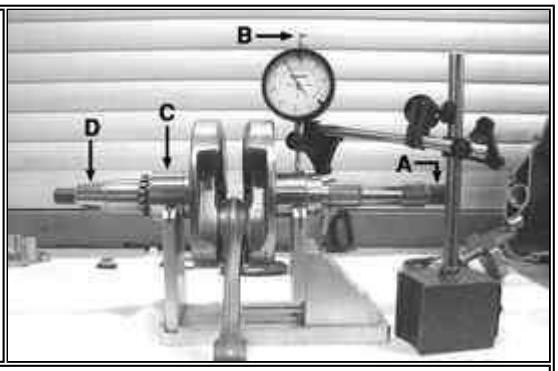

- Check that the driving shaft cone, the tab seat, the oil guard connection and the threaded tangs are in good working order.
- In case of failures, replace the driving shaft.

N.B.: Bench ends are not rectifiable.

The connecting rod cannot be replaced. To check the connecting rod small end diameter, see chapter (Thermal unit and timing system)

- When cleaning the driving shaft, be careful to prevent any impurity from entering into the shaft lubrication hole.

CAUTION: In case of replacement of a driving shaft consisting of two half-shafts of different category, replace the two half-crankcases as well, coupling the two components (shaft and crankcase) with the same category.

- To check the gear on the driving shaft, see chapter (Thermal unit and timing system

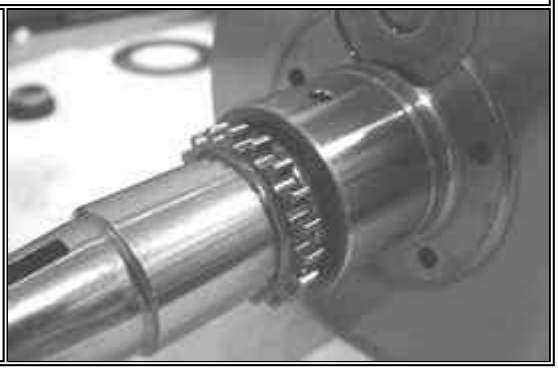

- Before checking the crankcase, carefully clean all lubrication channels and surfaces. - For the transmission-side half-crankcase, special attention should be given to the brasses, to the cooling jet on the transmission side (see figure) and to the lubrication duct.	
N.B.: The jet is fed through the bench brasses. Proper operation of this component improves the piston top cooling. Clogging has effects that are difficult to detect (piston temperature increase). Failure or leak can considerably decrease the bench brass and connecting rod lubrication pressure.	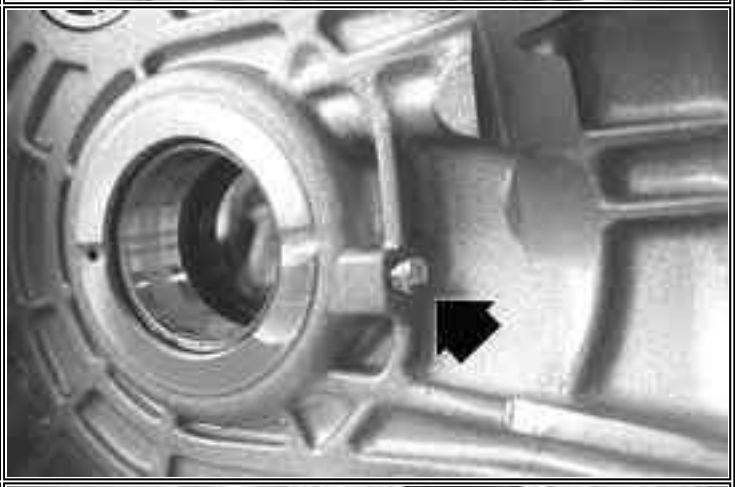
- For the flywheel side half-crankcase, special attention should be given to the lubrication channels for the bench brasses and to the compartment and the channels for the oil pump, as well as to the duct for the by-pass located on the flywheel cover. N.B.: As already described in the "Lubrication" chapter, it is especially important that the by-pass housing on the flywheel cover is free from wear that may impair the proper sealing of the lubrication pressure adjustment piston. The head lubrication channel is provided with a shutter jet; this gives a "low pressure" head lubrication. This choice was made to reduce the oil temperature in the sump.	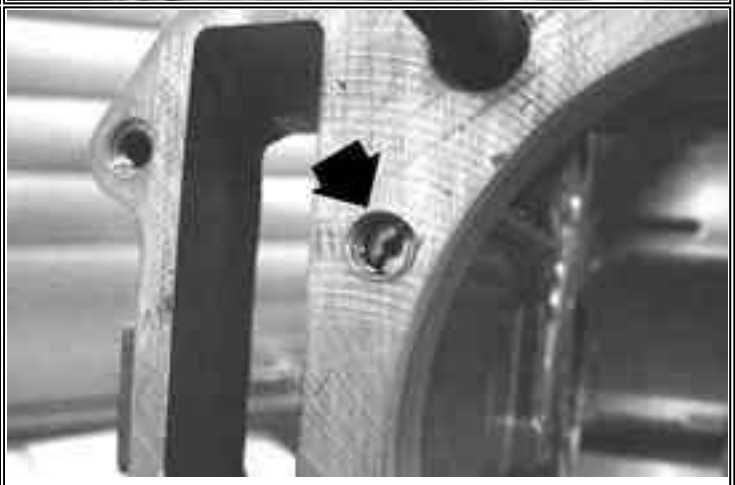

The jet clogging impairs the head lubricationand the timing mechanisms.
A jet failure causes a decrease of the benchbrass and connecting rod lubrication pressure.
- Check that the surfaces are free from dents ordeformations, with special attention to the crankcase coupling and thecrankcase-cylinder surfaces.
- Any defects in the crankcase gasket ormatching surfaces (see Flywheel cover coupling) can cause pressurised oilleaks, thereby affecting the connecting rod and bench brass lubricationpressure.
- Check that the driving shaft axial clearancecontainment surfaces are free from wear. For the dimensional check, refer tothe instructions relating to the axial clearance and dimensions check on thedriving shaft

- To obtain a proper lubrication of the brasses, it is necessary to have an optimum lubrication pressure (4 bar) and a good oil rate; to this purpose, the brasses must be placed properly, so as to not have shuttering in the oil feeding channels.
- Bench brasses are realised with 2 half-bearings, one of which is solid while the other has holes and seats for lubrication.

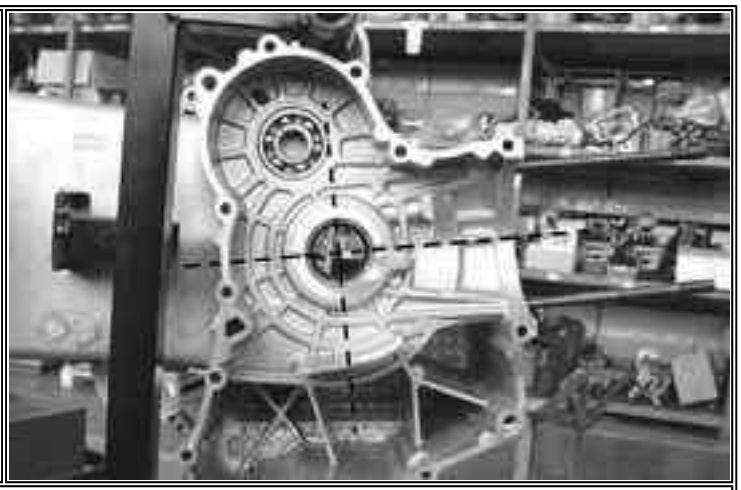

- The solid half-bearing is intended to stand the thrusts caused by combustion, and for this reason it is arranged opposed the cylinder.
- To prevent shutters in the oil feeding channels, the matching surface of the two half-bearings must be perfectly orthogonal to the cylinder axis, as shown in the figure.
- The oil feeding channel section is also affected by the brass driving depth relative to the driving shaft axial clearance containment plane.

N.B.: To keep such position of the brasses on the crankcase, driving is forced on cast-iron rings inserted in the casting of both half-crankcases.

- Check the brass diameter in the 3 directions shown in the figure.
- Repeat the measurements for the other half of the brass. See figure.

N.B.: Do not take the measure on the half-bearing matching surface since the ends are released to allow deformation upon insertion.

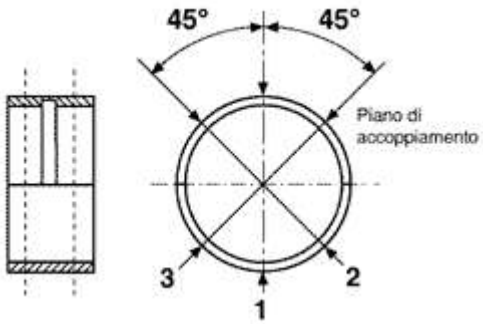

- The standard brass diameter after driving is variable on the basis of a coupling selection.
- The brass seats into the crankcases are classified into 2 categories as for the driving shaft Cat. 1 and Cat. 2.
- Brasses are divided into 3 categories according to their thickness. See the table below:

TYPE	IDENTIFICATION	THICKNESS
A	Red	1,982 ~1,987
B	Blue	1,987 ~1,992
C	Yellow	1,992 ~1,997

Half-shaft category	Half-shaft category	Brass category
1	B	FC1 Dwg. CM1033015001
2	C	
1	A	FC2 Dwg. CM1033015002
2	B	

N.B.: For overhauling with spare parts, match the shaft withtwo shoulders of category 1 to crankcase FC1 (or category 2 to crankcase FC2).

A spare crankcase cannot be combined with adriving shaft with mixed categories. Spare shafts have half-shafts of the samecategory.

N.B.: To replace the half-shafts, remove the counter-shaftbearings as described above. Remove the complete driven pulley and theanti-flapping roller from the transmission side half-crankcase, as described inChapter 3 ?

Legal Notes

- To check the oil pump, see the Lubrication chapter.	

- Using a micrometer, measure the 2 capacities of the counter-shaft as shown in the figure. Standard diameter: 17 $^{-0.01}_{-0.02}$ mm - Check that the water pump drive is not worn.	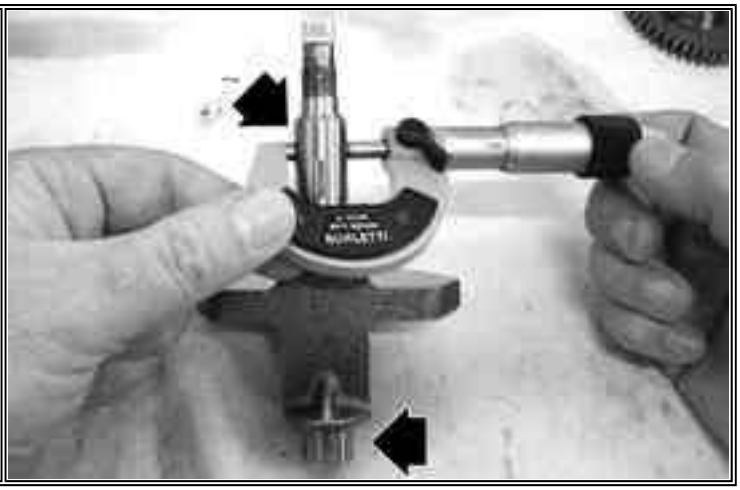

- Check the proper position of the gasket. N.B.: The gasket tooth must be positioned into the relevant seat.	
- Insert the oil pump with gear - Insert the 2 fastening screws through the slits obtained on the gear and tighten at the prescribed torque. N.B.: The position of installation for the pump is forced by the screws. Failure to observe the tightening torque can cause a variation of the rotor and water pump coupling clearance. Tightening torque: Oil pump fastening screws: 5 ~6 Nm	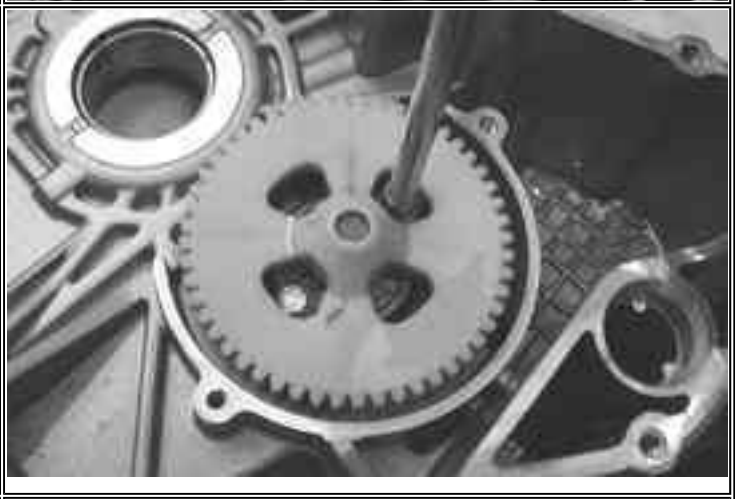
- Insert the counter-shaft with the gear on the flywheel side half-crankcase. - Install the specific tool in the position shown in the figure. Specific equipment and tools: Counter-shaft lock wrench 020479Y	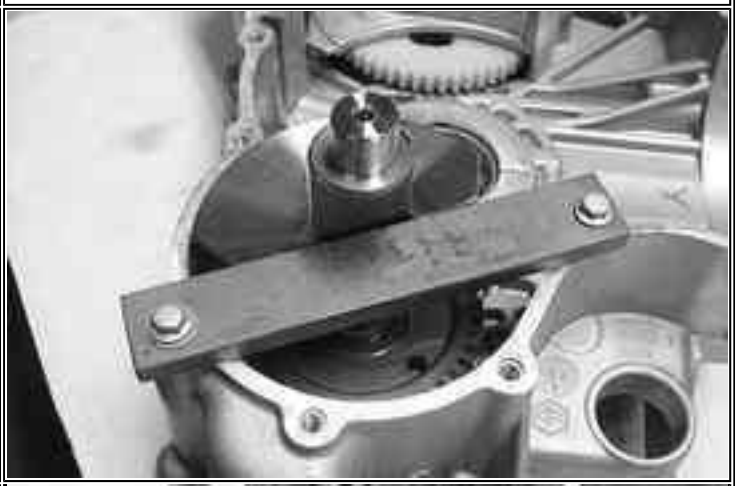
- Keep the counter-shaft into position and insert the washer with the nut. - Tighten the nut at the prescribed torque, using LOCTITE 243. - Remove the specific tool. Tightening torque: Counter-shaft fastening nut: 25 ~29 Nm	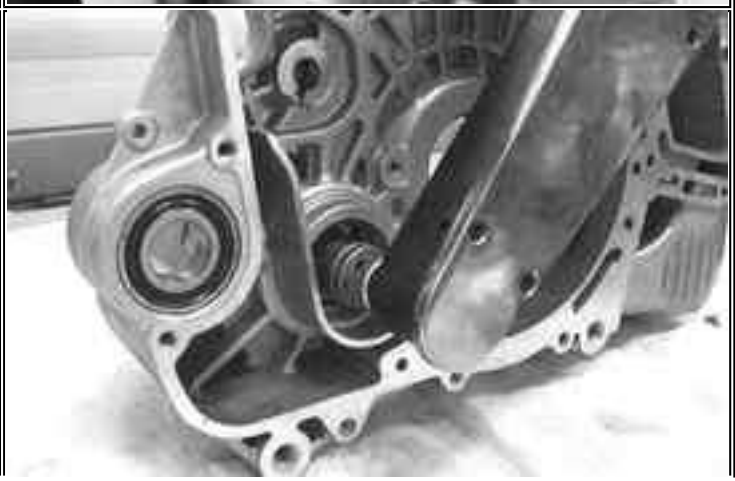

- Check that the oil pump and counter-shaft control gear are free from deformations or dents. Replace, if required. N.B.: If you have to replace the oil pump and counter-shaft control gear it is necessary to replace the counter-shaft gear as well. - Before installing the gear on the driving shaft, carefully clean the two matching surfaces removing any residues of LOCTITE from the holes by a brush.	

Blow with compressed air and degrease the fixingholes on both surfaces to make the new LOCTITE grip.
Apply LOCTITE 243 to the holes again.
- Repeat the same procedure for the 4 fasteningscrews.
- Insert the control gear on the driving shaftwith the hole countersink visible.
- Tighten the 4 fastening screws at theprescribed torque.

N.B.: To avoid damaging the screw control hexagon, it is preferableto use an inside hexagon socket wrench.

Tighteningtorque:

Gearfixing on driving shaft screws: 10 ~12 Nm

- Lubricate the bench brass on the flywheel side half-crankcase. - Lubricate the shim adjustment washer. - Insert the shim adjustment washer on the driving shaft in its original position. - Insert the specific timing tool in the hole on the counter-shaft. Specific equipment and tools: Pin for counter-shaft timing 020471Y	
- Insert the driving shaft on the pin and into the brass. - Before inserting thoroughly, make the oil pump gear collimate with the control gear. - Insert thoroughly and remove the specific tool.	
N.B.: When inserting the shaft on the half-crankcase, be careful not to damage the bench brass with the threaded tang of the driving shaft and with the timing control toothed pinion.	
- Install the oil pump closing	

plate. - Tighten the 2 flanged fastening screws at the prescribed torque. Tightening torque Closing plate fastening screws: 8 ~10 Nm	

- Remove the oil guard from the transmission side half-crankcase by a screwdriver.	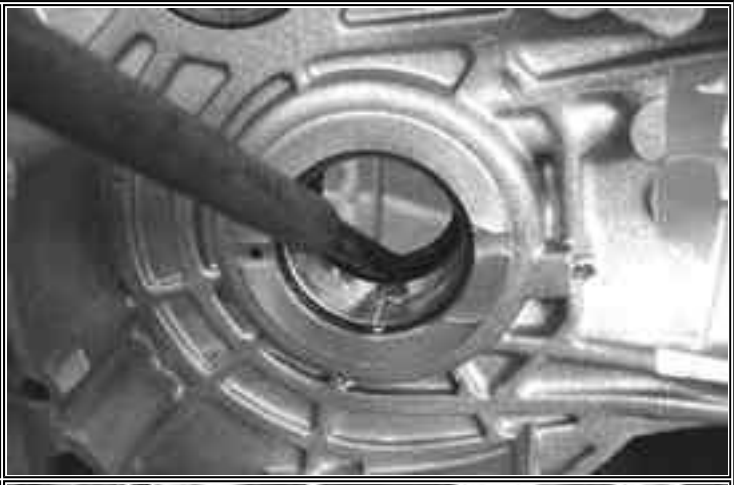
- Install a new oil guard after lubricating it, using the specific tool, arranging it at a 0.5 mm recess from the crankcase plane. CAUTION :A wrong positioning of the oil guard affects the lubrication oil circulation. Specific equipment and tools: Adapter 52x55 mm 020360Y Handle for punches 020376Y	
- Insert the gasket on the flywheel side half-crankcase.	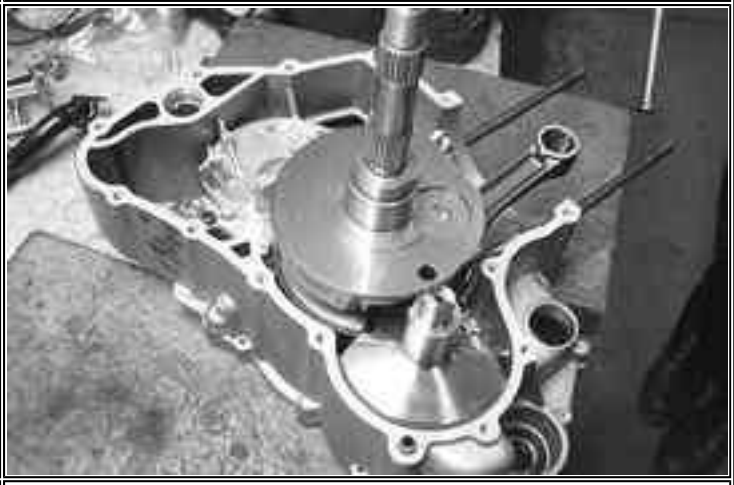
- Lubricate the bench brass on the transmission side half-crankcase. - Couple the 2 half-crankcases being careful not to damage the brass on the transmission side half-crankcase with the threaded tang of the driving shaft. - Insert the engine support retain screw on the flywheel	

side half-crankcase without tightening. - Insert the 14 fastening screws by arranging the single shorter screw "A" and the single longer screw "B" as shown in the figure.	

- Tighten the screws thoroughly and tighten atthe prescribed torque.
- Check that the driving shaft rotates freely.

N.B.: Remove any excess from the crankcase coupling gasket onthe cylinder plane, to ensure better sealing performance.

Tighteningtorque:

Crankcasecoupling screws: 11 ~13 Nm

- Install the thermal unit (cylinder, head, piston) as described in the (Thermal unit and timing system chapter.	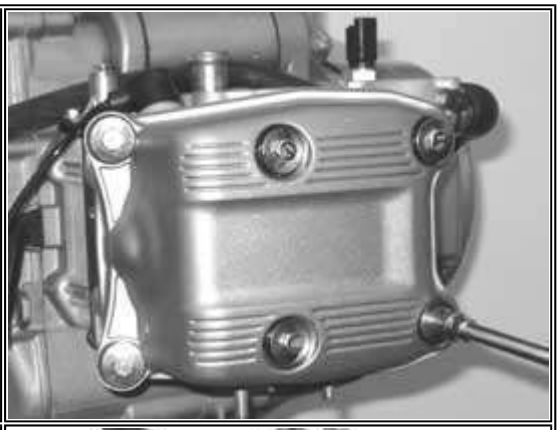
- Install the magneto flywheel with start-up control as described in the (Flywheel and start-up chapter.	
- Install the flywheel cover with the cooling system sleeves, as described in the Flywheel cover chapter.	

	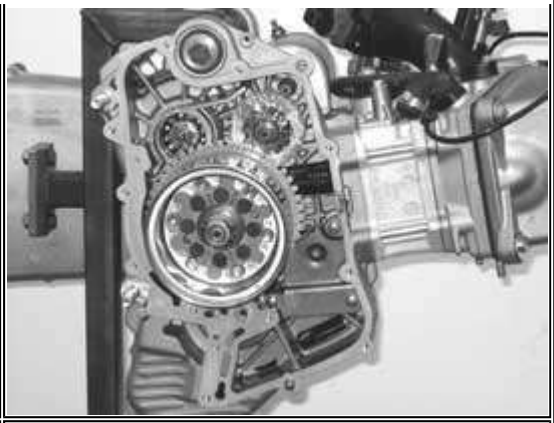
- Install the complete driving pulley, the transmission cover and the relevant net filter and the outside transmission cover as described in the Automatic transmission chapter.	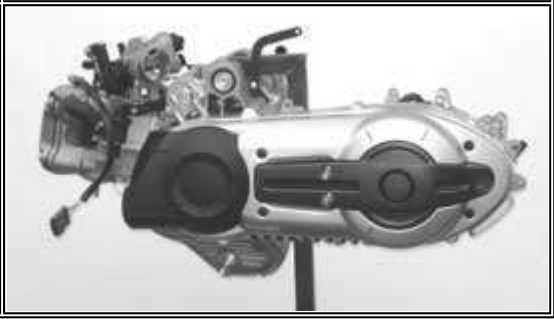

Sump capacity	Overhaul	1,7 l
	Oil and filter replacement	1,5 l
Recommended engine oil	Selenia HI Scooter - 4Tech 5W/40	API SJ specification
Oil pump	Type	Trochoidal
	Rotor thickness	8 mm
	Assembly clearances	lobe ends 0,05~,008 mm
	Outside rotor radial clearance	0,05~,12 mm
	Rotor axial clearance	0,025~,065 mm
By-pass	Type	piston
	Piston diameter	d13,9 $^{-,039}$ mm -0,057
	Spring free length	62,5 mm
	Calibration pressure	4 bar
Pre-filter	Type	net, plastic
Oil filter	Type	paper, with overpressure and anti-emptying by-pass
Oil minimum pressure indicator light switch	Calibration	0,3 ?0,6 bar
Head lubrication control jet	Diameter	d 1 $^{-0,05}$ $^{+0,057}$ mm Tightening torque 5~7 Nm
Piston cooling nozzle	Diameter	d 0,8 $^{-0,05}$ +0,057 mm
Base ventilation check	Device	decantation chamber and metal reed valve

Terminal layout

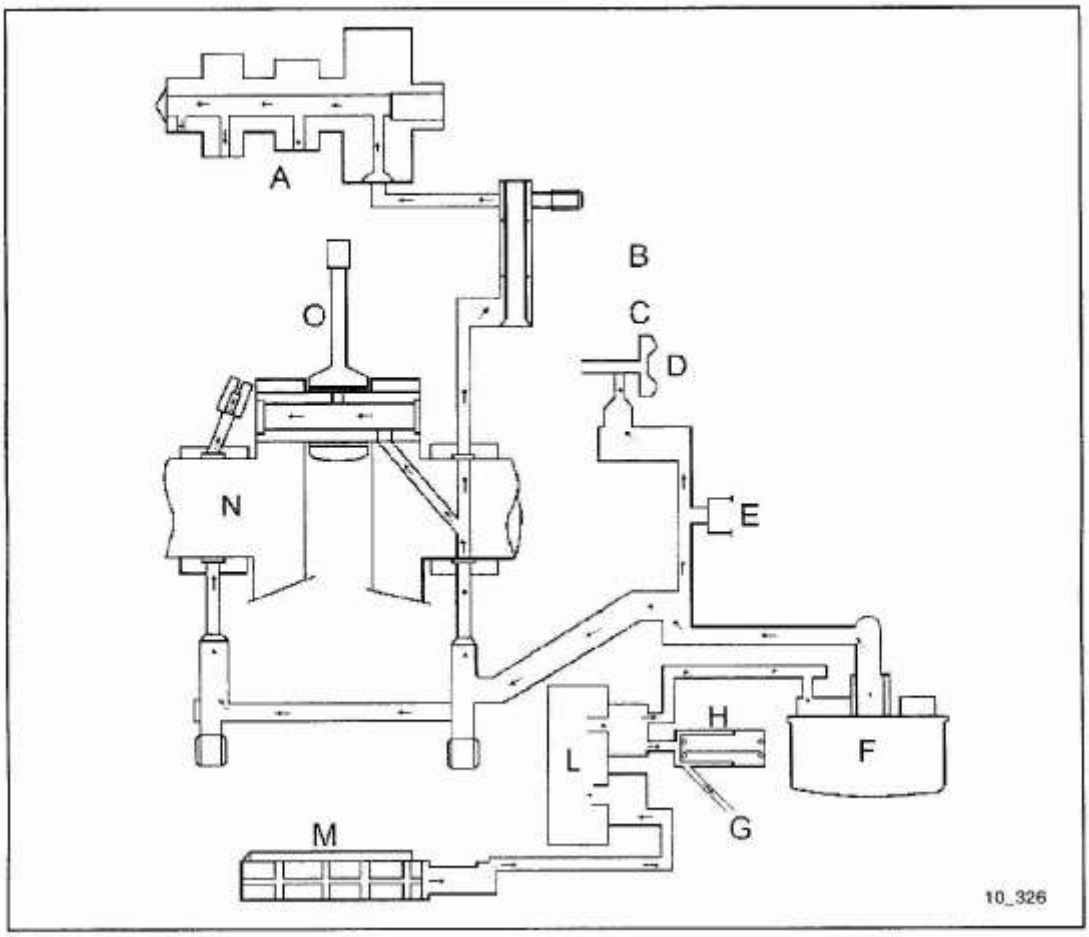

A	Camshaft
B	Cylinder-head plane
C	Cylinder-crankcase plane
D	Water pump impeller
E	Minimum oil pressure sensor
F	Oil filter cartridge
G	To the oil sump
H	By-pass valve
L	Oil pump
M	Net pre-filter
N	Driving shaft
O	Connecting rod

Thelubrication system is divided into two sections:

-high pressure

-low pressure

The high pressure section includes allcomponents located on the engine crankcase, while the low pressure section onlyrefers to the thermal unit.
The trochoidal pump is installed in the sump andis controlled by a pair of gears.
A pre-filter is used to ensure the pumpintegrity.
The pre-filter is of the extractable type andits cap also serves for engine oil drainage.
Delivery to the pump is controlled by a 4-barcalibrated piston by-pass. This is located before the cartridge filter, andboth are installed on the flywheel cover, for this reason the gasket is subjectto the system pressure.
The by-pass located before the cartridge filterimproves the filter working conditions, especially with cold oil.
The filter is provided with an anti-emptyingvalve and with an overpressure valve; the latter trips when the filtering masscauses a pressure drop of more than 1 ?0.2 bar.
Of course, these conditions are only reachedwith cold oil and engine at a high speed, or with a dirty filter.
The filtered oil is used to lubricate the waterpump shaft and once the engine crankcase is reached, to lubricate the benchends, the connecting rod head and the piston cooling nozzle, obtained on thetransmission-side connection.
The transmission-side bench connection isprovided with sealing oil guard and relevant drainage duct.
The timing feeding duct is found at the flywheelside connection; delivery to the head is controlled by the specific jet startedin the engine crankcase.
The timing components work with low pressurelubrication.
The camshaft ends are directly obtained in thehead aluminium; the camshaft axial clearance is partly recovered by the oilsent to the connection with smaller diameter.
The camshaft lubricates the rockers throughspecific holes obtained in such position as to ensure that lubrication ismaintained after the vehicle stops. This result is obtained thanks to theposition taken by the camshaft with higher probabilities when the engine stops.
The oil used for head lubrication returns to thesump through the chain housing channel and therefore lubricates the chain aswell.
A unidirectional valve and a decantation chamberare used to prevent the gases recovered from the base from carrying quantitiesof oil. The unidirectional valve is of the metal reed type; the decantationchamber is provided with a drainage hole. A failure of these components cancause the presence of oil in the engine air feeding duct.
An excess of oil vapours can cause clogging ofthe channels obtained on the throttle body.
A pressure switch located close to the filteroutput indicates the system minimum oil pressure.
The lubrication circuit doers not concern thecounter-shaft, which is lubricated by the oil carried by the gears or by theoil centrifuged by the driving shaft.
The same occurs for the piston or pin, eventhough in this case the cooling nozzle is especially important.

1 inimum oil pressure warning light on with hot engine.
GO- to 2

2 **-** Remove the minimum pressure switch electric connector.
Check that the warning light turns off.
YES go to 3 NO go to 11

3 heck the actual oil pressure.
GO - to 4

4 - Remove the switch and install the specific tool with the relevant gasket.
Specific equipment and tools:
Manometer 020193Y
Manometer union 020434Y
- Remove the bar with the oil loading cap and
insert a cap with the temperature probe supplied with the specific tool.
Insert the probe to feel contact with the case bottom and pull back a few millimetres.
Specific equipment and tools:
Multimeter with temperature probe 020331Y
GO - to 5

5 -Measure pressure with cold and idling engine.
Standard values:

20degree Temperature	~ 4,5 bar
1400 rpm	

NOTE:RPM can be measured both by the exhaust gas analyser and by the diagnostic tester
YESgo to 6 NO go to 12

6 -nbsp;Let the engine warm up and repeat the check with hot engine.
Standard values:

80degree Temperature	~ 1,5 bar
1400 rpm.	

YESgo to 7 NOgo to 8

7-Replace the oil minimum pressure switch.

8 -If pressure lower than 1.3 ~1.5 bar is measured.
GOto 9

9 -Replace the oil filter and repeat the pressure check with oil at 80degree.
YESgo to 10 NO go to 13

10 _The failure was fixed.
It is recommended to respect the suggested number of kilometres covered.

11 _Check and restore the electric system.

12 _If pressure lower than 4 bar is measured.
GO o 9

13 _Remove the flywheel cover and check the by-pass and the cover sealing gasket efficiency towards the case internal side, as described in the "Flywheel cover" chapter.
YES o to 14NOgo to 15

14- Check whether there is an irregular clearance on the driving shaft:
- axial clearance (see the "Crankcase and driving shaft" chapter)
- radial clearance, especially in the direction of the cylinder axis
- clearance according to the direction of rotation with the connecting rod in quadrature

YES o to 16NO o to 17
15_Replace the faulty components ("Flywheel cover" chapter).
16_Overhaul the engine ("Crankcase and driving shaft" chapter).
17 _Open the engine crankcase and remove the oil pump, as described in the "Crankcase and driving shaft" chapter. - Check the oil pump as described in the following pages. - Check that the cooling nozzle and the timing feeding jet are properly installed. -Visually inspect the driving shaft couplings and their size ("Crankcase and driving shaft" chapter).

NOTE:Any failures of the couplings and of the timing components cannot be detectedby the inspection of the lubrication pressure. The failures may become evidentby an increase of noise.

NOTE:In case of irregular pressure on the base, carry out a visual and dimensionalinspection of the timing components (see Thermal unit and timing system chapter).

- Remove the two screws and the oil pump cover.	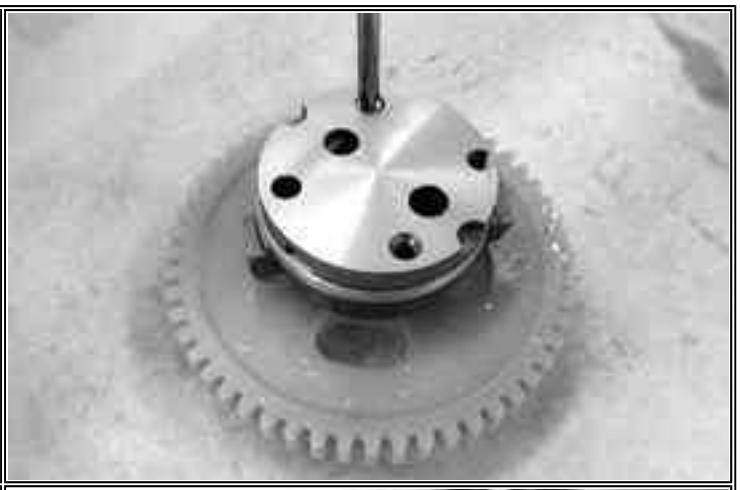
- Remove the inside rotor retaining snap ring turning it to move the opening at the shaft face.	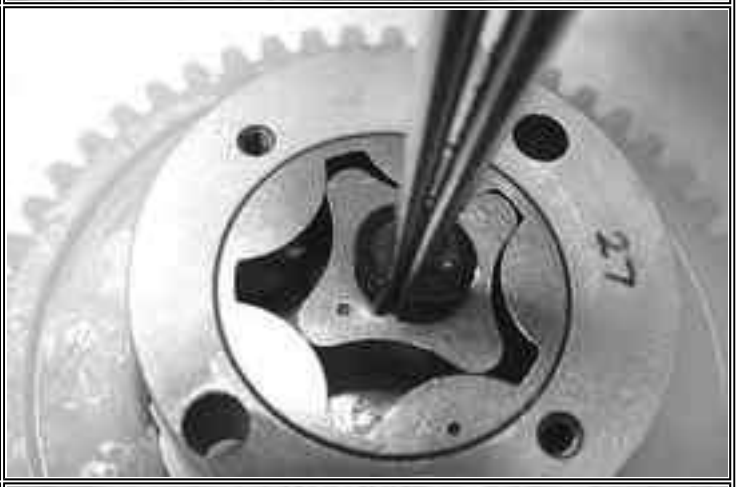
- Remove the rotors and carefully wash them with gasoline and compressed air. - Extract the shaft with its gear and check that it is in good working order and free from wear.	
- Reassemble the rotors with the pump body keeping the 2 references visible. - Insert the shaft with the gear and install the lock ring; then, turn it with the opening opposed to the shaft face. - Check any irregular clearance between shaft and pump body.	

- Using a thickness gauge, check the distance between the rotors in the position shown in the figure. Admissible limit clearance: 0.012 mm	
- Check the distance between outside rotor and pump body; see figure. Admissible limit clearance: 0.25 mm	
- Check the rotor axial clearance using a rectified bar as reference plane, as shown in the figure. Admissible limit value: 0.1 mm	
- Lubricate the inside rotors. - Check that the pump cover exhibits no wear or scratching. - If non-conforming values are measured, replace it. - Install the pump cover so as to allow the alignment of the holes for the crankcase fixing screws. - Tighten the two fastening screws at the prescribed torque.	

Tightening torque:

Oilpump coupling screws 0.7 ~0.9 Nm

1 -In case of oil leaks from the oil filter or from the flywheel cover coupling gasket, check the lubrication pressure. GO to 2
2- Install the specific tool. Specific equipment and tools: Manometer 020193Y Adapter 020434Y GOto 3
3-Check the system pressure with cold engine and medium ?high speed. Standard pressure < 6 bar YESgo to 4 NOgo to 5
4 -Replace the damaged components.
5 -Check the adjustment by-pass efficiency (see "Flywheel cover" chapter) and restore the proper sliding.

NOTE:Standard pressures are obtained using oil with the prescribed viscosity. Ahigher viscosity causes an increase of the system pressure.

1 -If oil consumption is higher than 250 gr/1000 km on run-in engine, proceed as follows. GOto 2
2 -Check the presence of oil at the recovery duct on the filter box. YES go to 3 NO go to 4
3 -Check the unidirectional reed valve and the decantation chamber drainage hole. YESgo to 5 NO o to 4
4 -Check the thermal unit seals (piston rings, valve guides and oil guards), see "Thermal unit and timing system" chapter.
5 -Restore the valve or the drainage hole efficiency.

INDEX OF TOPICS

PRIOR TO DELIVERY	11

BR-500 Pre-Delivery Inspection
Assembly Operation Drawing

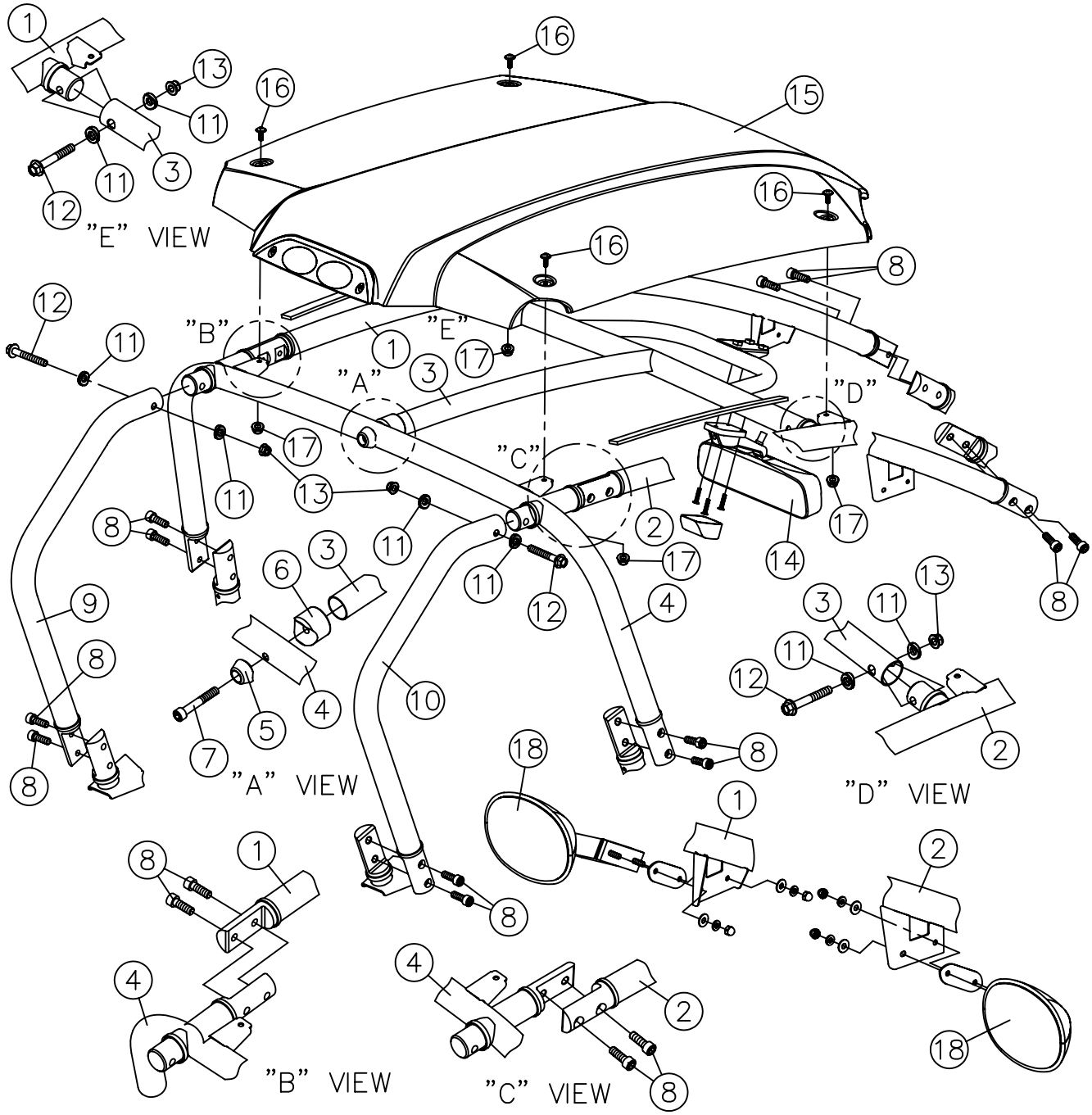

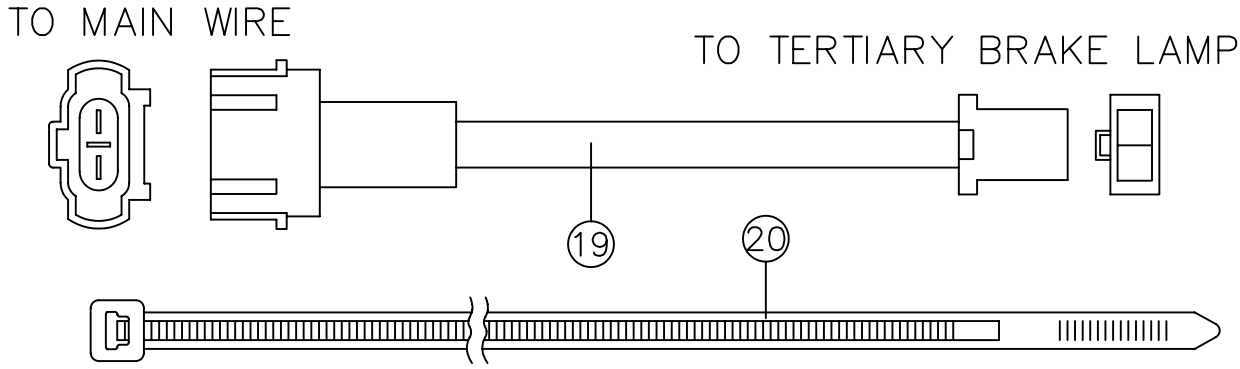

BR-500 Pre-Delivery Inspection
Assembly Procedure

NO.	OP INSTRUCTION	DEVICE NAME	CODE & SPEC.	REMARK
1	TO PUT PART 4 AT THE FRAME FIXED ,AND LOCK WITH PART 8, BUT NOT TIGHTLY	1. AIR TOOL 2. HEXAGON HEAD SLEEVE	3/8" 3/8"X8mm	
2	1.TO PUT THE PART 1+2 AT THE BOTH SIDE OF FRAME 2.THEN, TO LOCK PART 1+2 WITH PART 8 AT THE FRAME FIXED, BUT NOT TIGHTLY	1. AIR TOOL 2. HEXAGON HEAD SLEEVE	3/8" 3/8"X8mm	
3	1.TO PUT THE BOTH SIDE OF PART 3 AT PART 1+2 FIXED 2.AND LOCK WITH PART 11+12+13,BUT NOT TIGHTLY 3.THEN, TO INSERT PART 6 INTO PART 3 4.AND SCREW PART 5+7 AT PART 4	1. AIR TOOL 2. SLEEVE 3.HEXAGON WRENCH	3/8" 3/8"X14mm 12mmX14mm	
4	TO PUT THE REAR END OF PART 1/2 BY MIXING WITH PART 8 AT PART 4 FIXED,BUT NOT TIGHTLY	1. AIR TOOL 2. HEXAGON HEAD SLEEVE	3/8" 3/8"X8mm	
5	1.TO PUT PART 9+10 AT PART 4 FIXED 2.THEN, TO LOCK PART 11+12+13, BUT NOT TIGHTLY 3.THEN, TO PUT THE LOWER END OF PART 9+10 SCREWED BY PART 8, NOT TIGHTLY	1. AIR TOOL 2. SLEEVE 3.HEXAGON WRENCH 4. HEXAGON HEAD SLEEVE	3/8" 3/8"X14mm 12mmX14mm 3/8"X8mm	
6	TO LOCK PART 7+8+12+13 SECURELY	1. AIR TOOL 2. SLEEVE 3.HEXAGON WRENCH 4. HEXAGON HEAD SLEEVE	3/8" 3/8"X14mm 12mmX14mm 3/8"X8mm	
7	1.TO PUT PART 15 AT FRAME FIXED 2.TO SECURE WITH PART 16+17	1. AIR DRIVER SCREW 2. + TYPE DRIVER BITS 3.HEXAGON WRENCH	1/4" 1/4"X#2 10mmX12mm	
8	1.TO PUT PART 14 AT FRAME FIXED AND SECURE BY THE PART 14 ATTACHED SCREW 2.TO CLOSE THE PART 14 ATTACHED COVER	1.AIR DRIVER BITS 2. + TYPE DRIVER BITS	1/4" 1/4"X#2	
9	1.TO PUT PART 18 AT FRAME FIXED 2.TO SECURE PART 18 ATTACHED NUT + WASHER TIGHTLY	DOUBLE BOX-END WRENCH	10mmX12mm	
10	1.IF THREE IS A POWER SUPPLY WIRE ON THE THIRD BRAKE LAMP, 2.TO MAKE ONE END OF PART 19 CONNECT WITH THE THIRD BRAKE LAMP 3.AND TO CONNECT ANNOTHER END WITH THE MAIN HARDNESS 4.TO CLIP PART 20 + 19 ON PART 4			

BR-500 Pre-Delivery Inspection
Part's List

REF NO.	PART NO.	DESCRIPTION	DESCRIPTION	REGD NO.	REMARK
1	B84210907700	左防滾側管組合(銀灰)	NON-ROLL TUBE COMP.LH SIDE	1	
2	B842A1907700	右防滾側管組合(銀灰色)	NON-ROLL TUBE COMP.RH SIDE	1	
3	B84211007700	上橫管組合(銀灰)	ACROSS TUBE COMP. UP	1	
4	B84211707700	後橫桿組合(銀灰)	ROLL CAGE ACROSS. RR COMP	1	
5	B84211600000	管墊圈A	WASHER PIPE A	1	
6	B84211500000	管襯套	BUSH PIPE	1	
7	90211007000	六角承窩螺栓(M10*1.25P*70L)	HEXAGON SCOKET HEAD CAP SCREW	1	
8	90211003000	六角承窩螺栓(M10*30L)	HEXAGON SCOKET HEAD CAP SCREW	16	
9	B84211107700	左防滾固定管組合(銀灰色)	NON-ROLL FIXED TUBE COMP.LH	1	
10	B842A6007700	右防滾固定管組合(銀灰)	NON-ROLL FIXED TUBE COMP.RH	1	
11	B84211800000	管墊圈B	WASHER PIPE B	8	
12	90191006001	六角凸緣螺栓(M10*1.25P*60L)	HEXAGON FLANGE BOLT	4	
13	92061000004	凸緣U型螺帽	HEXAGON FLANGE NUT	4	
14	B86170000000	室內鏡總成	INTERIOR MIRROR ASSY	1	
15		第三煞車燈與頂棚蓋裝配組合	TERTIARY BRAKE LAMP & CEILING COVER	1	
16	90200601800	帶墊圈螺栓	BOLT WITH WASHER	4	
17	92040600000	六角凸緣螺帽(M6*1.0P)	HEXAGON FLANGE NUT (M6*1.0P)	4	
18	B86160000000	後視鏡總成	BACK MIRROR COMP	1	
19	B85816200000	第三煞車燈延接線	EXTENTION WIRE	1	
20	B87011400000	束帶	CABLE TIE	5	

Perform the checks below before delivering the kart:

NO	Check Item	Y	N	NO	Check Item	Y	N
1	Steering Wheel			8	Engine Coolant		
2	Gap of throttle Pedal			9	Tire Pressure		
3	Gap of Brake Pedal			10	Confirm Engine ,VIN No & Document		
4	Lights and Horn			11	Owner's Manual		
5	Fuel Tank and Fuel Kind			12	Operating Method Introduction		
6	Engine Oil			13	Periodic Maintenance introduction		
7	Disk Brake fluid			14	Warranty Introduction		

Locks inspection

- Safety locks according to chapter "Characteristics"
- Covers fastening screws

Electric System:

- Main switch
- Headlights: upper beams, dipped beams, tail lights and relevant light indicators
- Headlight position adjustment
- Direction indicators and relevant lights
- Instrument panel lights
- Instruments, fuel and cooling water temperature indicator
- Instruments unit indicator lights
- Horn
- Elecrric starter-up
- Parking button function

Caution: **charge the battery before use to ensure optimum performance. Failure to suitable charge the battery before its first us at a low electrolyte level will cause an early failure of the battery.**

Caution: **when installing the battery, connect the positive cable before connecting the negative one, and perform the reverse operation upon reoval.**

Warning: **the battery electrolyte is dangerous and may cause serious burns. It contains sulphuric acid. Contact with eyes, skin and clothes should be avoided.**

Caution: **never use fuses having a higher capacity than the recommended value. Using fuses with inadequate capacity may cause damages to the kart or even cause fire hazards.**

Level Check:

- Hydraulic braking system fluid level
- Rear hub oil level
- Engine coolant level
- Engine oil level

INDEX OF TOPICS

TIME CHART	12

PREFACE OF STANDARD OPERATING TIME SCALE:

1.Qualified Staff: Has at least 3 years(included) experience in scooter repairing, or get the equivalent scooter repairing licence.

2.Repairing Procedure: Use the proper tool and according to SERVICE MANUAL procedure.

3.The tabled time includes checking, adjusting and confirming of the repairing. The unit is "hour"

4.When repairing more than 2 parts, if they belong to same repairing system, then the longest time will represent the whole repairing time.

5.When repairing more than 2 parts, if they belong to different repairing system, then the summation of every time will represent the whole repairing time.

6.If the parts repaired are not in the table , please find the nearest one to represent the repairing time.

Motive Power Industry CO., LTD
April,2007

MOTIVE POWER INDUSTRY CO., LTD.

KART STANDARD OPERATING TIME SCALE (ENGINE)

KART 車輛維修標準工時表 (引擎)

UNIT(單位):HOUR(小時)

JOB NO. 工作編號	PART NAME 零件名稱		BR500
0401	FAN COVER	風扇罩	NA
0402	COOLING COWL (1)	冷卻罩（1）	NA
0403	COOLING COWL (2)	冷卻罩(2)	NA
0404	FAN COVER COMP	風扇罩蓋	NA
0405	FAN(ENGINE)	風扇	NA
0406	FLYWHEEL MAGNETO ASSY	飛輪磁電機總成	2
0407	SPARKING PLUG	火星塞	0.1
0415	PAPER FILTER	空氣濾清器紙蕊	0.25
0416	AIR CLEANER ASSY FOR TK	空氣濾清器組合	0.5
0417	CARBURETTOR ASSY	化油器總成	NA
0418	MOTOR COMP. STARTER	起動馬達組合	0.5
0419	INTAKE MANIFOLD	進氣歧管	0.6
0420	COVER,SECOND AIR	空氣進氣蓋	NA
0421	SECOND AIR PIPE COMP	進氣導管組合	NA
0422	AIAC COMP	空氣導入控制閥組合	NA
0423	INJECTOR	噴油嘴	0.3
0424	THROTTLE BODY	節流閥體	0.7

MOTIVE POWER INDUSTRY CO., LTD.

KART STANDARD OPERATING TIME SCALE (ENGINE)

KART 車輛維修標準工時表 (引擎)

UNIT(單位):HOUR(小時)

JOB NO. 工作編號	PART NAME 零件名稱		BR500
0601	COVER RIGHT CRANKCASE	右曲軸箱蓋	1.5
0602	CRANK CASE, RH.	右曲軸箱	4
0603	SEPARATOR OIL	機油分隔板	NA
0604	OIL PUMP ASSY	機油泵總成	4
0605	CHAIN, OIL PUMP	機油泵驅動鏈條	3.5
0606	GEAR, STARTER REDUCTION	起動減速齒輪	1.5
0607	ONE WAY CLUTCH ASSY.	單向離合器總成	2
0608	CAP TAPPET ADJUSTING HOLE	濾油網蓋	0.25
0609	GROOVE BALL BEARING	曲軸滾珠軸承	6.5
0610	CRANKCASE ASSY(LH,RH)	左右曲軸箱組合	7
0611	CYLINDER HEAD COVER	汽缸頭蓋	1
0612	CYLINDER HEAD	汽缸頭	4.5
0613	CHAIN ADJUSTER COMP	鏈條調整器組合	0.7
0614	CAM ASSY	凸輪軸總成	1.2
0615	OIL FILTER	機油濾清器	0.25
0616	CYLINDER ASSY	汽缸組合	4.5
0617	PISTON ASSY	活塞組合	4.5
0618	CRANKSHAFT COMP	曲柄軸總成	6
0619	ENGINE OIL	引擎機油	0.3
0620	OIL SEAL, LH CRANKSHAFT	左曲柄軸油封	0.8
0621	OIL SEAL, RH CRANKSHAFT	右曲柄軸油封	1
0622	OIL COOLER COMP	機油冷卻器組合	NA
0623	COUNTERSHAFT COMP	平衡軸	5.5

MOTIVE POWER INDUSTRY CO., LTD.

KART STANDARD OPERATING TIME SCALE (ENGINE)

KART 車輛維修標準工時表 (引擎)

UNIT(單位):HOUR(小時)

JOB NO. 工作編號	PART NAME 零件名稱		BR500
1202	ENGINE LH SIDE COVER	引擎左邊蓋	0.4
1203	BREATHER PIPE	通風管	0.3
1204	SPONGE	過濾棉	0.2
1205	DRIVEN GEAR AND SPG. ASSY.	腳踏被動齒輪彈簧組合	NA
1206	RATCHET KICK STARTER	起動棘輪	NA
1207	KICK, SHAFT ASSY	腳踏起動心軸組合	NA
1208	TORSION SPRING	扭轉彈簧	NA
1209	BAR, KICK STARTER	起動踏桿組合	NA
1210	DRIVE FACE	驅動面	0.3
1211	DRIVING FACE COMP, MOVABLE	活動驅動面組合	0.4
1212	SIDE PIECE	滑塊	0.4
1213	BELT	V型皮帶	0.4
1214	DEEP GROOVE BALL BEARING	被驅動面軸承	0.6
1215	WEIGHT SET, CLUTCH	離合器比重組	0.6
1216	OUTER BODY COMP, CLUTCH	離合器外套本體組合	0.4
1217	BODY COMP, DRIVE PLATE	驅動板組合	0.6
1218	BELT PULLEY COMP. DRIVEN FACE	被驅動面皮帶輪組合	0.4
1219	TRANSMISSION COVER CASE	傳動箱蓋	1.5
1220	DRIVE SHAFT	驅動軸	1.3
1221	FINAL GEAR ASSY	最終齒輪組合	1.3
1222	GEAR OIL	齒輪油	0.25
1223	MUFFLER ASSY.(OR FRONT SECTION)	消音器總成(或前段)	0.5
1224	MUFFLER REAR SECTION	消音器後段	0.4
1225	HEAT PROTECTOR, MUFFLER	消音器護板	0.1

MOTIVE POWER INDUSTRY CO., LTD.

KART STANDARD OPERATING TIME SCALE (ENGINE)

KART 車輛維修標準工時表 (引擎)

UNIT(單位):HOUR(小時)

JOB NO. 工作編號	PART NAME 零件名稱		BR500
2001	WATER TANK ASSY	散熱器總成	1
2002	CUP,VALVE	水箱蓋閥杯	0.1
2003	AUXILIARY COOL TANK	副水箱	0.2
2004	WATER PIPE COOLER BETWEEN PUMP	水管 水箱 V.S. 水泵	0.7
2005	WATER PIPECOOLER->PRESSURE VALVE, AD TANK	水管 水箱->洩壓閥 ,副水箱	0.5
2006	WATER TANK FOR FAN	水箱風扇	0.3
2007	SENSOR SWITCH	溫度感測開關	0.4
2008	IMPELLER WATER PUMP	水泵葉輪	1
2009	SEAL MECHANICAL	機械油封	1
2010	COVER WATER PUMP	水泵蓋	0.8
2011	GASKET WATER PUMP	水泵墊片	0.8
2012	SHAFT WATER PUMP	水泵樞軸	0.8
2013	HOSE A,B WATER	冷卻水管 A,B	0.3
2014	THERMOSTAT ASSY	恆溫器	0.4
2015	COVER THERMOSTAT	恆溫器蓋	0.4
2016	EARTH TERMINAL THERMO	恆溫器座	0.5
2017	THERMO UNIT ASSY	自動控溫器	0.4
2018	BY-PASS VALVE	旁通閥	2

MOTIVE POWER INDUSTRY CO., LTD.

BUGRACER STANDARD OPERATING TIME SCALE (CHASSIS)

BUGRACER車輛維修標準工時表 (車體)

工時代號 CODE	英文名稱 Description	中文名稱 Chinese	BR500 LABOR HOUR
B0101	FRAME COMPLETE	車架總成	8
B0102	BRACKET, FRONT MUD FENDER	前土除托架	0.1
B0103	BRACKET, REAR MUD FENDER	後土除托架	0.1
B0104	ROLL CAGE BAR (FRONT OR REAR)	前後橫桿	0.05
B0105	ROLL CAGE BAR (LH OR RH)	左右橫桿	0.1
B0106	ENGINE HANGER ASSY	引擎吊架本體熔接組合	1
B0107	TOW BALL	拖車球頭	0.05
B0108	THROTTLE/BRAKE PEDAL ASSY.	加油/煞車 踏板組合	0.2
B0109	GEAR SHIFTING LEVER	換擋把手	0.1
B0110	REVERSE/PARKING LEVER ASSY	倒檔/手煞車拉桿 組合	0.2
B0111	DRIVING CHAIN	驅動鏈條	NA
B0112	ENGINE MOUNT LINK	引擎連接座	0.3
B0113	BEARING, ENGINE MOUNT LINK	引擎連接座軸承	0.2
B0114	REVERSE GEAR FIXING PLATE	倒檔固定板	0.1
B0115	REVERSE GEAR BOX COMP	倒檔齒輪箱總成	3
B0116	BEARING, REVERSE GEAR BOX	倒檔齒輪箱軸承	3.5
B0117	REVERSE CABLE	倒檔導線	1
B0118	HAND PARKING CABLE	手煞車導線	0.5
B0119	DRIVING SHAFT(CV JOINT)	傳動軸	0.8
B0120	DIFFERENTIAL CABLE	差速導線	0.5
B0121	SOLENDID VALVE CABLE	電磁閥導線	0.2
B0122	DIFFERENTIAL SHIFTING LEVER	差速把手	0.2

MOTIVE POWER INDUSTRY CO., LTD.

BUGRACER STANDARD OPERATING TIME SCALE (CHASSIS)

BUGRACER車輛維修標準工時表 (車體)

工時代號 CODE	英文名稱 Description	中文名稱 Chinese	BR500 LABOR HOUR
B0201	WHEEL RIM	前後輪鋼圈	0.3
B0202	TIRE	前輪胎總成	0.3
B0203	REAR AXLE	後軸	NA
B0204	SHAFT CONNECTER	後軸固定座	NA
B0205	FRONT BRAKE DISC	前剎車碟	0.2
B0206	REAR BRAKE DISC	後剎車碟	0.2
B0207	FRONT BRAKE DRUM	前剎車盤本體	0.3
B0208	REAR BRAKE DRUM	後剎車盤本體	0.3
B0209	REAR AXLE FIX SEAT	後輪軸固定座組合	NA
B0210	FINAL DRIVE SPROCKET	後鏈輪	NA
B0211	FINAL DRIVE SPROCKET HOLDER	後鏈輪固定座	NA
B0212	BRAKE CYLINDER ASSY.	煞車總泵組合	0.3
B0213	CALIPER COMP. (FRONT OR REAR)	煞車夾總成(前或後)	0.4
B0214	BRAKE PAD SET (FRONT OR REAR)	煞車片組合(前或後)	0.5
B0215	HOSE , HYDRAULIC BRAKE (FRONT OR REAR)	油壓剎車管(前或後)	0.3
B0216	PROTECTIVE COVER, DRIVING CHAIN	鍊條保護蓋	NA
B0217	PARK CALIPER COMP. (FRONT OR REAR)	機械煞車夾總成(前或後)	0.5
B0218	PADS OF PARK CALIPER	煞車塊(機械煞車夾)	0.6

MOTIVE POWER INDUSTRY CO., LTD.

BUGRACER STANDARD OPERATING TIME SCALE (CHASSIS)

BUGRACER車輛維修標準工時表 (車體)

工時代號 CODE	英文名稱 Description	中文名稱 Chinese	BR500 LABOR HOUR
B0301	FRONT FENDER	前土除	0.1
B0302	REAR FENDER	後土除	0.1
B0303	SEAT ASSEMBLY	座椅	0.2
B0304	SEAT BELT	安全帶	0.2
B0305	FOOTBOARD (GO OR STOP)	腳踏墊(左或右)	NA
B0306	COVER , SPEEDOMETER	碼錶飾蓋	0.05
B0307	FUEL TANK COMPLETE	汽油箱	0.4
B0308	FUEL TUBE (TUBE A OR B)	汽油管 (A OR B)	0.2
B0309	AUTOCOCK	自動油杯	NA
B0310	FUEL FILTER ASSEMBLY	汽油過濾器	0.1
B0311	OIL TANK ASSEMBLY	機油箱	NA
B0312	OIL TUBE	機油管	NA
B0313	THROTTLE CABLE	加油導線總成	0.3
B0314	INDUCT MAGNETO	感應磁鐵	0.1
B0315	REAR MIRROR ASSY.	後視鏡總成	0.05
B0316	BRACKET 2, COUNTER INDUCT	計數器感應固定板2	0.2
B0317	BRACKET 1, COUNTER INDUCT	計數器感應固定板1	0.2
B0318	BRAKE SAFETY SWITCH	煞車安全開關	0.3
B0319	BRAKE ADJUSTING PIN	導線調整軸銷	0.1

MOTIVE POWER INDUSTRY CO., LTD.

BUGRACER STANDARD OPERATING TIME SCALE (CHASSIS)

BUGRACER車輛維修標準工時表 (車體)

工時代號 CODE	英文名稱 Description	中文名稱 Chinese	BR500 LABOR HOUR
B0401	STEERING SHEEL	方向盤	0.1
B0402	STEERING SHAFT	方向把手	0.2
B0403	STEERING SHAFT BUSH SLEEVE	轉向軸襯套	0.2
B0404	STEERING KNUCKLE	轉向操作鍊軸	0.2
B0405	STEERING GEAR	操縱齒輪	0.3
B0406	STEERING BALL JOINT	操縱球接頭	0.2
B0407	STEERING TIE-ROD ASSEMBLY(LH OR RH)	轉向拉桿(左或右)	0.2
B0408	KNUCKLE (LH OR RH)	轉向軸(左或右)	0.3
B0409	FRONT SUSPENSION	前避震器	0.2
B0410	REAR SUSPENSION	後避震器	0.2
B0411	UPPER SUSPENSION ARM (LH OR RH)	上懸吊總成(左或右)	0.3
B0412	LOWER SUSPENSION ARM (LH OR RH)	下懸吊總成(左或右)	0.3
B0413	UPPER SUSPENSION ARM BUSH	上懸吊避震襯套	0.4
B0414	LOWER SUSPENSION ARM BUSH	下懸吊避震襯套	0.4
B0415	SWING ARM ASSEMBLY, UPPER	上搖臂	NA
B0416	SWING ARM ASSEMBLY, LOWER	下搖臂	NA
B0417	BUSH, SWING ARM	搖臂襯套	0.3
B0418	CONNECTING ROD(LH OR RH)	拉桿, 上搖臂(左或右)	0.2
B0419	GREASE VALVE	注油閥	0.05
B0420	CUSHION BUSH, SWING ARM	搖臂套管襯墊	0.3

MOTIVE POWER INDUSTRY CO., LTD.

BUGRACER STANDARD OPERATING TIME SCALE (CHASSIS)

BUGRACER車輛維修標準工時表 (車體)

工時代號 CODE	英文名稱 Description	中文名稱 Chinese	BR500 LABOR HOUR
B0501	MAIN WIRE ASSEMBLY	主配線	2
B0502	RESISTOR ASSEMBLY	電阻器	NA
B0503	IGNITION COIL ASSEBMLY	點火線圈	0.1
B0504	RECTIFIER & REGULATOR	整流穩壓器	0.1
B0505	STARTER RELAY ASSEMBLY	起動繼電器	0.1
B0506	SAFETY SWITCH (BRAKE)	煞車安全開關	0.3
B0507	BATTERY	電瓶	0.05
B0508	SPEEDOMETER	碼錶摠成	0.3
B0509	HORN	喇叭	0.1
B0510	DIRECTION LIGHT CONTROLLER	方向燈繼電器	0.05
B0511	MAIN SWITCH ASSEMBLY	主電源開關	0.1
B0512	STEERING LOCK	防盜瑣	0.1
B0513	BATTERY (+) LINE	電極正線	0.1
B0514	C.D.I. UNIT ASSEMBLY	C.D.I.電子元件組合	0.2
B0515	REAR RACK	置物架	0.2
B0516	REFLECTOR (FRONT OR REAR)	反光片(前或後)	0.05
B0517	HEAD LAMP BULB	頭燈泡	0.1
B0518	HEAD LAMP ASSY.	頭燈組合	0.2
B0519	RUBBER MOUNT, HEADLAMP	頭燈橡膠底座	0.1
B0520	BACK LAMP COMP	後燈總成	0.1
B0521	BACK LAMP COVER	後燈蓋	0.05
B0522	LICENSE LAMP COMP	牌照燈總成	0.1
B0523	FRT SIGNAL LAMP ASSY (LH OR RH)	前方向燈組合(左或右)	0.1
B0524	REAR SIGNAL LAMP ASSY(LH OR RH)	後方向燈組合(左或右)	0.05
B0525	RELAY	繼電器	0.1
B0526	SOLENDID VALVE	電磁閥	0.2
B0527	3rd BRAKE LAMP	第三煞車燈總成	0.1

MOTIVE POWER INDUSTRY CO.,LTD.

Factory :NO.66,SHANJIAO RO.,DACUN TOWNSHIP,CHANGHUA COUNTY,TAIWAN,R.O.C
T E L : 886-4-852-8111 F A X : 886-4-852-8112 E-MAIL : pgo.ms12.hinet.net

PIAGGIO

SERVICE STATION MANUAL

• Engine 500 cc

Piaggio & C. S.p.A.

Pontedera
After Sales Service
Dis. 594766 - 04/01

Grafica e Stampa: C.L.D. - Pontedera (PI)

"© Copyright 2001 - PIAGGIO & C. S.p.A. Pontedera.
All rights reserved."

Data are subject to modification without notice.
We decline all liability for the use of non-original spare parts or accessories that have not been tested and/or approved.

SERVICE STATION MANUAL
X9 500 cc

This manual has been prepared by Piaggio & C. S.p.A. for use in the workshops of authorised Piaggio dealers and sub-agents.
It is assumed that the person utilising this manual for servicing or repairing Piaggio vehicles has a knowledge of the principles of mechanics and standard procedures for vehicle repair. Any important changes in vehicle characteristics or specific repair operations will be divulged by means of updates to this manual.
Satisfactory repair or service cannot be achieved without the necessary equipment and tools. Refer to the pages of this manual concerning specific tools and equipment and the special tools catalogue.

Critical information in the manual is indicated as follows.

N.B.: Important information for facilitating and explaining a procedure.

Warning - Procedures that must be followed to avoid damage to the vehicle.

Caution - Procedures that must be followed to eliminate the risk of injury to repair / service personnel.

TABLE OF CONTENTS

GENERAL INFORMATION AND MAINTENANCE	1
SPECIFIC TOOLS	2
AUTOMATIC TRANSMISSION	3
FINAL REDUCTION	4
FLYWHEEL COVER	5
FLYWHEEL AND STARTING SYSTEM	6
THERMAL UNIT AND TIMING SYSTEM	7
CRANKCASE AND DRIVING SHAFT	8
INJECTION	9
LUBRICATION	10
COOLING SYSTEM	11
STARTER	12

TABLE OF CONTENTS

GENERAL INFORMATION AND MAINTENANCE 1

Safety prescriptions

- If the work to be carried out requires the vehicle engine to be running, make sure the workshop is well ventilated and use proper exhausters. Do not run the engine in closed places. Exhaust fumes are toxic.

- Battery electrolyte contains sulphuric acid. Protect the eyes, clothes and skin. Sulphuric acid is highly corrosive, if it comes into contact with eyes or skin, wash the affected area abundantly with water and seek immediate medical assistance.

- The battery produces hydrogen gas which is potentially explosive. Do not smoke near the battery and keep naked flames and sparks well clear, especially when the battery is on charge.

- Petrol is highly flammable and can be explosive in certain conditions. Do not smoke in the work area and do not introduce naked flames or sparks.

- Clean brake shoes, drums and pads in a well ventilated place. When using compressed air direct the jet away from you to avoid inhaling the dust. Although the brake linings are asbetos-free, inhalation of the resulting dust is harmful.

Maintenance regulations

- Use only genuine PIAGGIO spare parts and recommended lubricants. The use of non-original or non-conforming spare parts can cause damage to the vehicle.

- The only specific tools that can be used are those expressly designed for this vehicle.

- Always fit new gaskets, seal rings and split pins when reassembling parts.

- After disassembly, clean parts with non-flammable solvent or a solvent with a high flash point. Lubricate all surfaces before reassembly with the exception of conical couplings.

- After reassembling, check that all the components are correctly installed and that they work perfectly.

- Use only metric tools for disassembly, assembly and maintenance work. Metric screws, nuts and bolts cannot be interchanged with BS components. The vehicle may be damaged if unsuitable tools or nuts, bolts or screws are used.

- When working on the electrical system, ensure electrical components are correctly installed, paying particular attention to ground and battery connections.

Specifications (500 cc 4-stroke, 4-valves H_20 engine)

ENGINE

Type ..... single-cylinder, 4-stroke
Bore ..... 92 mm
Stroke ..... 69 mm
Displacement ..... 460 cm^3
Compression ratio ..... 10.5 : 1
Timing ..... chain-operated overhead single-shaft flywheel side, integrated phonic wheel, 4-valves and automatic starting valve lifter
Valves play: intake 0.15mm
exhaust 0.15mm
Valves play adjustment ..... threaded register on equalizers
Idle speed ..... 1450±50 rpm
CO% value ..... 1±1.5%
Starting system ..... electric starter
Lubrication ..... trochoid pump (inside the crankcase), oil filter and pressure adjustment by-pass
Lubrication pressure ..... 4 bar
Minimum allowed pressure (at 100°C) ..... 0.8 bar
Fuel system ..... electronic injection with electric fuel pump, throttle body Ø 38mm and single injector
Max power (at crankshaft) ..... 29 kW (39 CV) 7250 rpm
Max torque (at crankshaft) ..... 40 N·m (4 Kgm) 5500 rpm

Cooling system ..... liquid, by means of motorized pump, 3-way thermostat and electric fan.
Transmission ..... automatic speed variator by means of expanding pulleys, V-belt, automatic clutch, reduction gear, and transmission compartment cooling by air forced-circulation.
Ignition type ..... high efficiency inductive type integrated with injection, variable spark advance and separated high voltage coil
Spark advance (before T.D.C.) ..... variable controlled by injection power unit
Spark plug ..... CHAMPION RG 6 YC
NGK CR7 EKB
Engine-wheel ratio ..... short: 1/11.988
long: 1/ 4.86
Engine oil ..... SAE 5W/40 exceeding API SJ specifications
Quantity ..... ~ 1.7 l
Hub oil ..... TUTELA ZC 90
Quantity 250cc
Cooling system capacity ..... ~ 1.8 l

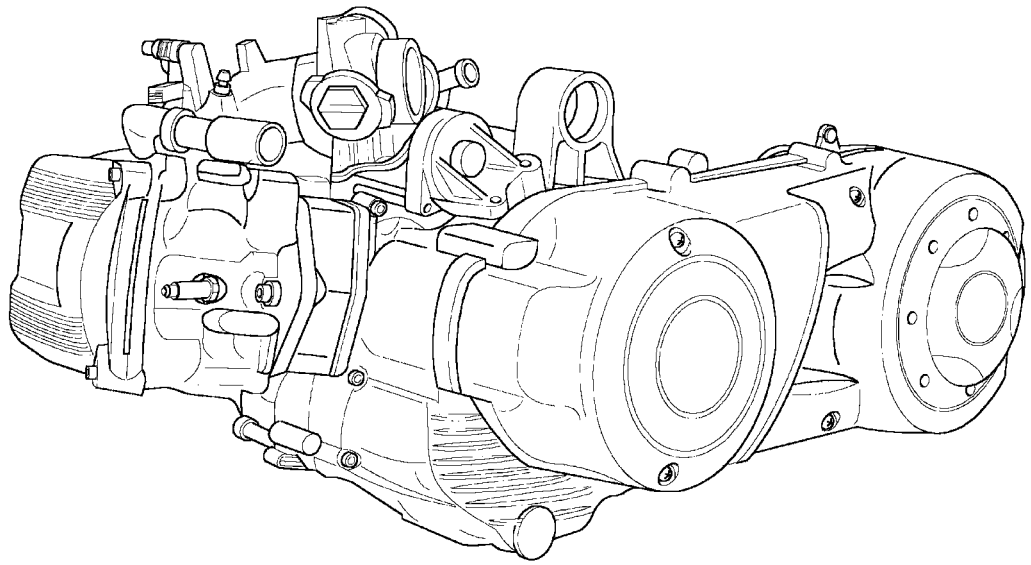

Spark plug

Check and replacement

Warning - Remove the spark plug when the engine cold. Replace the spark plug every 12,000 Km. The use of unsuitable control units or spark plugs other than those specified can seriously damage the engine.

Recommended spark plug: CHAMPION RG 6 YC
NGK CR 7 EKB

- Put the vehicle on its central stand.
- Open the door on the left side of the vehicle by levering in the recess in the lower part of the door after removing the screw.
- Disconnect the spark plug high voltage cable cap;
- Unscrew the spark plug with the spanner provided; check the spark plug to see if the insulator is cracked, the electrodes are worn out or excessively sooty. Also check the condition of the sealing washer and measure the electrodes gap with a suitable thickness gauge.
  Electrode gap: 0.7 - 0.8 mm
- If necessary adjust the gap by carefully bending the side electrode. If the spark plug has any of the defects mentioned above replace it with a plug of the recommended type;
- Insert the plug into the hole with the proper inclination, screw it in fully by hand and then tighten it with the specially designed spanner.
  Tightening torque: 10 N·m (1 Kg·m)
- Push the spark plug cap all the way down onto the spark plug and then proceed to the reassembly.

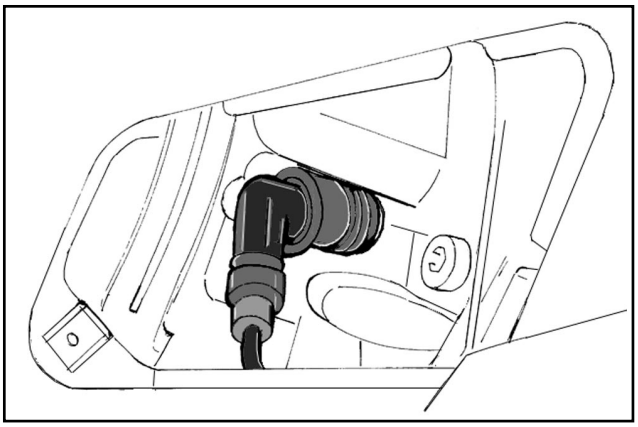

01_001

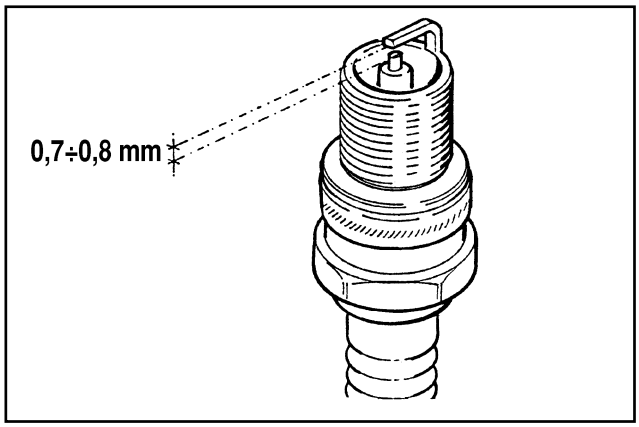

01_002

Air filter

- Remove the left-hand lower side panel
- Remove the cleaner cap after unscrewing the eight fixing screws, including one screw of the knob type.
- Pull out the filter element.
- Replace the air filter with a new one.

N.B.: Check and if necessary blow the air filter every 6,000 km. Direct the air jet from the inside to the outside of the filter (i.e. in the opposite direction to the air flow during normal engine operation).

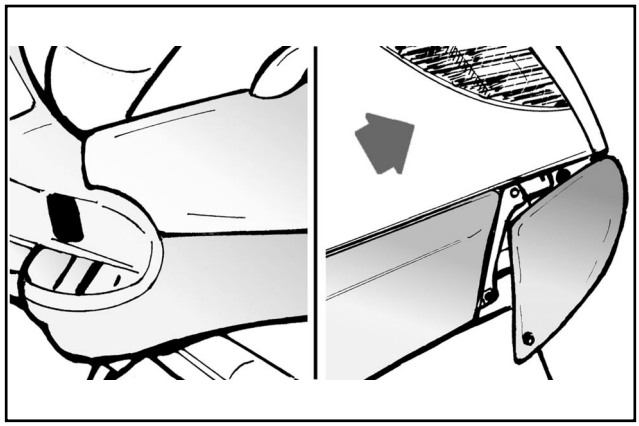

01_003

Warning - If the vehicle is mostly used on dusty roads, the air filter needs to be cleaned and replaced at shorter intervals than indicated in the Maintenance Schedule.

Warning - Do not run the engine if the air filter is not in place as this would result in excessive wear of the cylinder and piston as well as in damage to the throttle body.

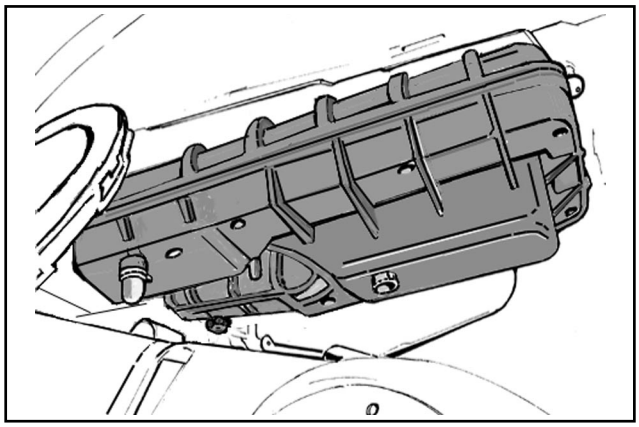

01_004

Engine oil level

In four-stroke engines oil is used to lubricate the valve gear components, the crankshaft bearings and the thermal unit. **A lack of engine oil can cause serious damage to the engine.**
In all four-stroke engines, oil deterioration and consumption are, to some extent, normal, especially during running-in. Consumption partly depends on the riding style (for example, constantly riding at full throttle increases oil consumption).

Checking the oil level

Perform this operation when the engine cold, as described below:
1) Put the vehicle on its central stand on a flat surface.
2) Unscrew dipstick «**A**», dry it with a clean cloth and refit by **screwing it completely.**
3) Remove the dipstick again and check that the oil level is between the MAX and MIN marks on the dipstick; top up if necessary.
   When the oil level is at MAX the engine contains 1700 cc of oil.

The level will be lower if checked after using the vehicle (i.e. when the engine is hot). To obtain a correct indication of the oil level, wait for at least 10 minutes after switching off the engine.

Topping up

If the oil level is too low, top up by adding fresh oil **without exceeding the MAX level.**

Approximately **400 cc** of oil are needed to restore the level between the **MIN** and **MAX** marks.

Oil pressure warning light

A warning light on the instrument panel comes on when the ignition key is turned to the **"ON"** position. The light must go out after the engine has started.
Should the warning light come on while braking, idling or cornering, check the oil level and the lubrication system as soon as possible.

Renewing the oil and the filter

The oil and the filter must be renewed every 6,000 km. Drain all the oil from the engine by removing gauze strainer drain plug «**B**» on the transmission side. To facilitate the outflow, also remove cap/dipstick «**A**».
Once the oil has drained completely through the drain hole, unscrew oil filter cartridge «**C**» and remove it as described below.

Since a certain amount of oil remains in the circuit, the replenishment must be made by adding approximately 1,500 cc of fresh oil through cap «**A**». Subsequently start the engine, let it idle for a few minutes and then switch it off. After about 5 minutes, check the level and if necessary top up **without ex-ceeding the MAX level.**
The filter cartridge must be replaced every time the oil is changed. For top-ups and
renewals use fresh oil of the **Selenia HI Scooter 4 Tech type.**

N.B.: Renew the oil when the engine is hot.

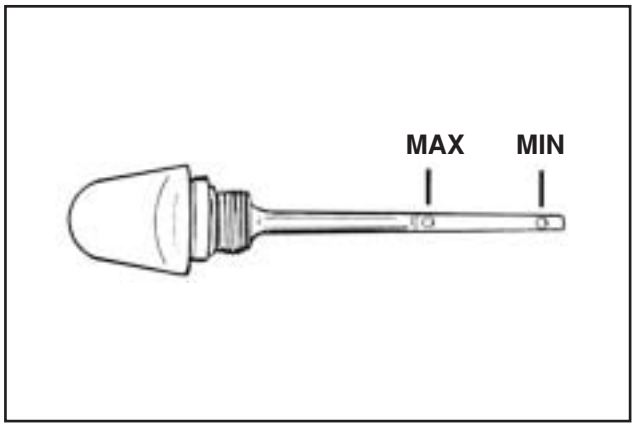

01_005

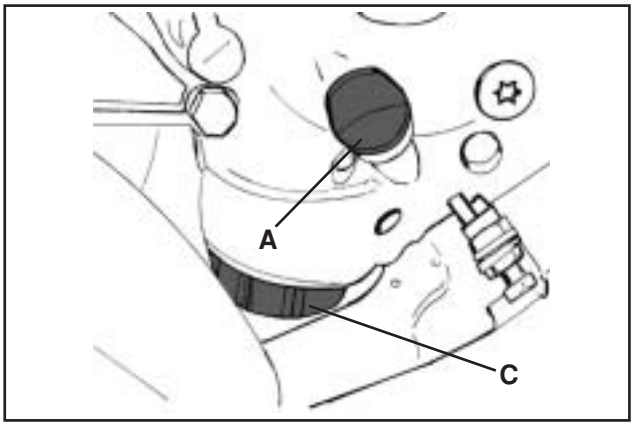

01_006

01_007

Replacing the filter

Warning - Do not dispose of the oil in the environment. Carry out the disposal of the oil, the gasket and the filter in accordance with the law.

Warning - To avoid burns, take care not to touch hot engine parts.

- Remove the silencer.
- Remove filler plug «**A**».
- Remove and clean the drain plug gauze strainer with compressed air.
- Using a strap wrench for filters, remove cartridge filter «**C**».
- Ensure that the O-rings on the prefilter and the drain plug are in good condition.
- Lubricate the O-rings and then refit the gauze strainer and the oil drain plug. Tighten the drain plug with the prescribed torque.
- Fit a new cartridge filter after lubricating the O-ring. Turn in until the gasket makes contact and then screw it with the prescribed torque.
- Reinstall the silencer.
- Add engine oil as previously described.

Tightening torque:
Oil filter: 12 - 16 N·m
Recommended oil: **Selenia HI Scooter 4 Tech**

Checking the hub oil level

- Put the vehicle on the central stand on level ground.
- Unscrew oil dipstick «**A**», wipe it with a clean cloth, reinsert it and **then screw it in fully**.
- Pull out the dipstick again and check that the oil level is between the MIN and MAX marks (see figure); if the level is below the MIN mark, top up with oil.
- Reinsert the dipstick and screw it tight.

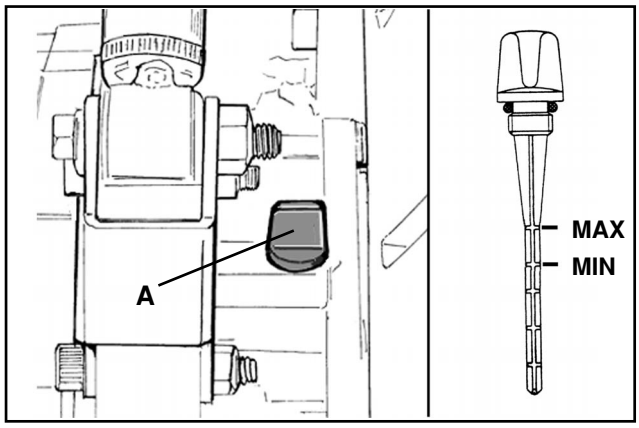

01_008

Renewing the hub oil

- Remove oil filler plug «**A**».
- Unscrew oil drain plug «**B**» and drain all the oil.
- Retighten the oil drain plug and then fill the hub with fresh oil.

Hub oil capacity: ~ 250 cc

Recommended oil: **TUTELA ZC 90**

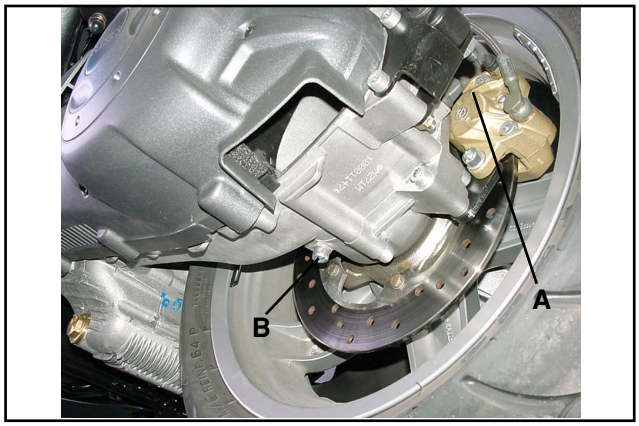

01_009

Engine cooling

Adding coolant and bleeding air from the system.

The level of the fluid must be checked every 6,000 km when the engine is cold.

Follow these steps:

- Put the vehicle on the central stand on level ground.
- Remove the expansion tank cap and top up if the coolant is below or near the MIN level in the expansion tank. The level of the fluid should always be between the MIN and MAX marks.
- To have an indication of the coolant level, refer to the groove in the plastic strip that can be seen through the coolant filler hole. The upper and lower parts of the groove correspond to the MAX and MIN levels respectively.
- The coolant consists of a 50 percent mixture of demineralized water and antifreeze solution with a base of ethylene glycol and corrosion inhibitors.
  Total coolant capacity: ~ 1.8 lt
- To check the presence of air in the circuit follow the procedure described in Chapter 11 - Cooling.
- Switch off the engine and allow it to cool down. After a few minutes, remove the expansion tank cap and check the level of the fluid.
- If necessary, top up by pouring fresh coolant into the expansion tank up to the correct level.

Warning - To prevent the coolant from leaking out of the expansion tank during use, be sure to never exceed the MAX level when refilling.

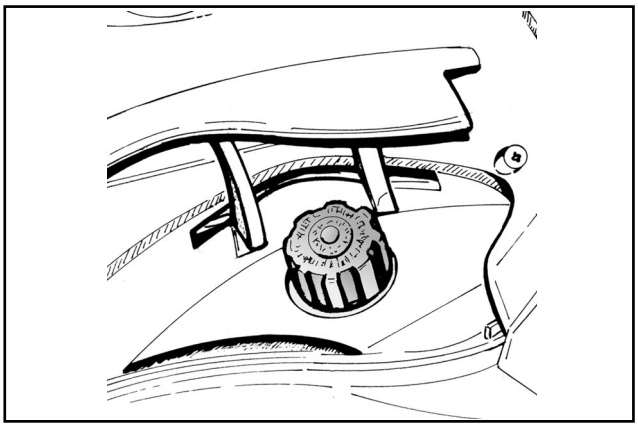

01_010

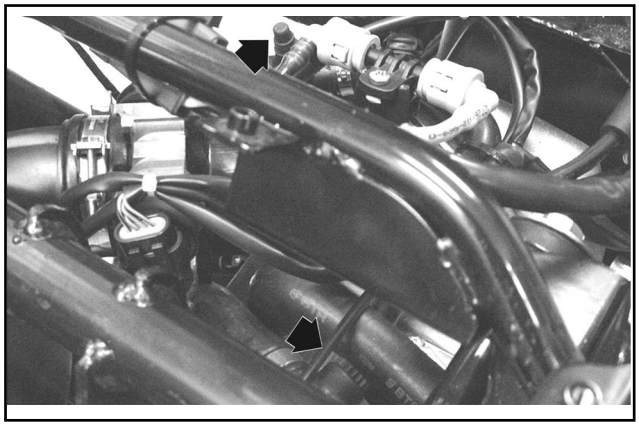

01_011

Water pump

If the water pump becomes noisy or liquid leaks through the pump drain hole, check the water pump as described in Chapter 5-Flywheel cover. Follow these steps:

- Put the vehicle on the central stand on level ground.
- Remove the lower right-hand side panel and the right-hand footboard as described in Chapter 8-Bodywork of the X9- 500 cc manual;
- Remove the sleeves from the water pump cover and the filler cap from the expansion tank and empty the cooling circuit.
- Drain the cooling system by removing the sleeves located on the water pump cover and the plug located on the expansion tank.

Warning - Perform the operation when the engine is cold.

- Remove the water pump cover shown in the figure after loosening the six fixing screws.
- Cooling circuit capacity: ~ 1.8 lt.
- As described in Chapter 5-Engine of the X9 500cc manual, partially drain the system and overhaul the pump.
- After solving the problem and refitting all components, fill and bleed the cooling circuit again.

N.B.: Change the coolant as described in Chapter 11-Cooling.

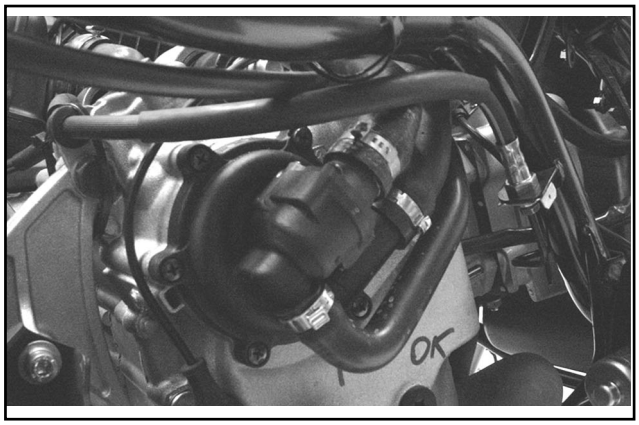

01_012

Checking the valve gear timing

- With a wrench of the TORX type, remove the timing check plug located on the flywheel cover.
- Remove the transmission cover and relevant insulation as described in Chapter 3-Automatic Transmission.
- Remove the head cover as described in Chapter 7-Thermal Unit and Timing System.
- Turn the driving shaft by means of the driving pulley until the reference mark on the magneto support coincides with the mark on the flywheel cover (TDC).
- Make sure that the reference mark on the phonic wheel is aligned with the mark on the head. If necessary, turn the driving shaft accordingly.

01_226

05_225

Valves play check/adjustment

- Check the valves play after aligning the valve timing reference marks as described in the previous section.
- Check that the valve-register play corresponds with the indicated values by means of a feeler gauge. If the valve play values, intake and exhaust respectively, do not correspond with those indicated below, adjust them by loosening the check nut and acting on the register with a screwdriver, as shown in the figure.

Intake: 0.15mm cold engine
Exhaust: 0.15mm cold engine

05_233

Checking pressure at the end of the compression

- Remove the spark plug cap with the engine cold.
- Remove the spark plug.
- Fit a compression control gauge in the spark plug seat by means of a 10mm plug connection. Tighten to the prescribed torque.
- Start the engine by means of the starting motor and with throttle body fully open until the gauge pointer stops. If the pressure is between 8 - 11 bar, remove the tool and reassemble the spark plug.
- If the measured pressure is lower than the recommended values, check the engine revs number; if it is lower than 450 rpm, check the starting system; if the revs number is correct or slightly higher, check the timing. If no troubles are found, proceed as follows:
- Check that the cylinder gasket is the right one.
- Check the thermal zone sealings (compression rings-valves).

Tightening torque:
Compression test connection: 10 N·m

TABLE OF CONTENTS

SPECIFIC TOOLING 2

Specific tools for Piaggio X9 500 cc 4-stroke 4-valve

RECOMMENDED TOOLS	
TOOL NAME	**PART NO.**
Circlip pliers	002465Y
Steering thrust ring removing drift	020004Y
Crankshaft aligning tool	020074Y
Support for “METABO HG 1500/2” air heater	020150Y
“METABO HG 1500/2” air heater	020151Y
Mityvac-type vacuum pump	020329Y
Stroboscopic gun for two- and four-stroke engines	020330Y
Digital multimeter	020331Y
Single battery charger	020333Y
Multiple battery charger	020334Y
Magnetic stand and dial gauge	020335Y
Engine support connection	020482Y
Engine mount base	020527Y
Engine mount revolving base	020604Y11

= New tools

NECESSARY TOOLS	
TOOL NAME	**PART NO.**
STEERING SEAT FITTING TOOL, to be fitted with parts 9 - Lower bearing adaptor, 10 - Upper bearing adaptor	001330Y
Bell Ø 80 mm	001467Y002
20 mm pliers	001467Y006
Bell Ø 63 mm	001467Y007
18 mm pliers	001467Y008
Bell Ø 45 mm	001467Y017
Bell Ø 60 mm	001467Y031
15 mm pliers	001467Y034
Hub bearing extraction bell	001467Y035
Steering tube ring spanner	020055Y
Oil pressure gauge	020193Y
Valve seal rings assembly tool	020306Y
37x40 mm adaptor	020358Y
42x47 mm adaptor	020359Y
52x55 mm adaptor	020360Y
20 mm guide (Driven pulley bearings)	020363Y
25 mm guide (Driven pulley bearings)	020364Y
Ø 28x30 mm adaptor	020375Y
Adapter sleeve	020376Y
Bushing (valve removing tool)	020382Y012
15 mm guide	020412Y
Valve oil seal extractor	020431Y
Oil pressure gauge unio	020434Y
17 mm guide (countershaft bearings)	020439Y
Driven half pulley spring compressor	020444Y
46-55 mm spanner	020444Y009
Ø 24 mm adaptor	020456Y
Steering tube lower bearing extractor	020458Y
Drift for fitting bearing on steering tube	020459Y
Injection tester kit	020460Y
Flywheel extractor	020467Y
Piston fitting band	020468Y
Injection tester reprogramming kit	020469Y
Piston pin retainer fitting tool	020470Y
Countershaft timing peg	020471Y
Flywheel retaining tool	020472Y
Clutch bell housing retaining tool	020473Y
Drive pulley stop spanner	020474Y
Piston position comparator support	020475Y
Pillar kit	020476Y
Ø 37 mm adaptor	020477Y
Driven pulley needle roller drift	020478Y
Countershaft stop spanner	020479Y
Fuel pressure measuring kit	020480Y
Control unit interface wiring harness	020481Y
30 mm guide	020483Y
Piston stop fork	020512Y
Compass wrench (valve lifter bell stop)	020565Y
Exhaust gas analyser	494929

TABLE OF CONTENTS

AUTOMATIC TRANSMISSION 3

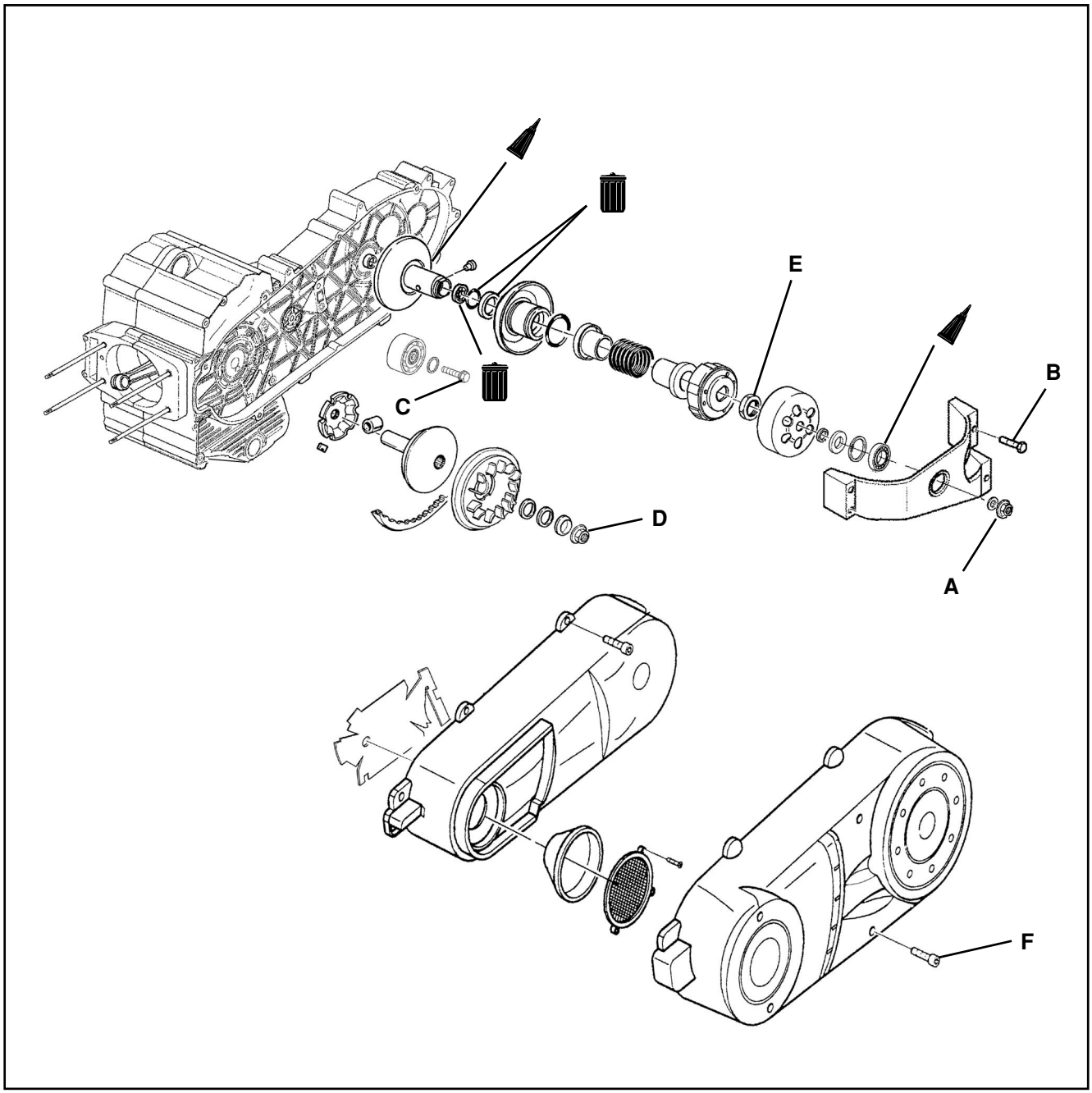

LUBRICATE WITH OIL
APPLY PRODUCT
WARNING: HANDLE WITH CARE
LUBRICATE WITH GREASE
CLEAN WITH CARE
ALWAYS REPLACE

REFERENCE	A	B	C	D	E	F	G	H	I	L	M	N	O	P	Q
QUANTITY	1	4	1	1	1	7									
TORQUE N·m	90-92	23-26	17-20	160-175	65-75	11-13									

External transmission cover

- Unloose the 5 fixing screws
- Remove the external plastic cover

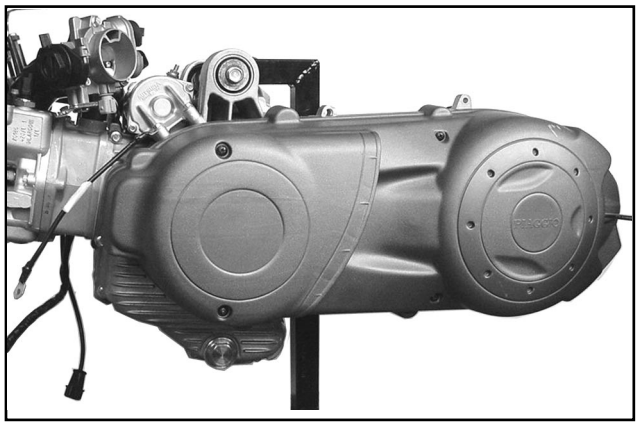

05_006

Transmission cover

- Unloose the 7 fixing screws
- Remove the cover and net filter

N.B.: Disassemble the net filter only if it is to be replaced.

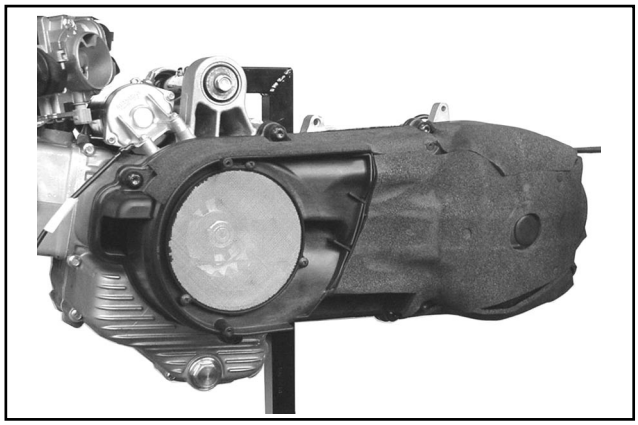

05_007

Belt antiflapping roller

- Check that the roller is in good condition and that it turns freely.
- Unloose the fixing screw with a 13 mm wrench
- Remove the roller and relevant bearing.

N.B.: If the roller does not turn freely, replace it.

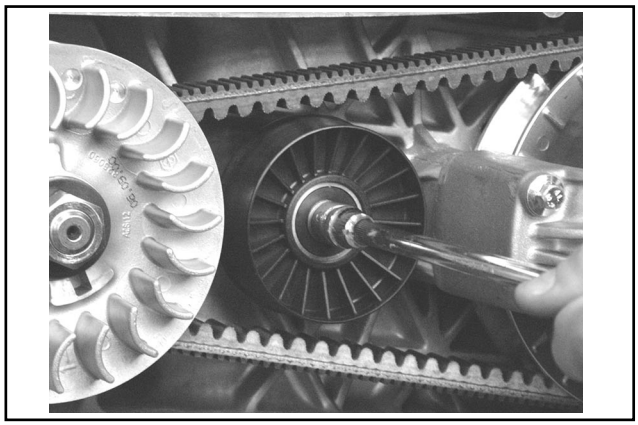

05_008

Driving pulley

- Turn the pulley central nut with a 27 mm wrench to align the internal holes horizontally, therefore allowing for the specific tool fitting.

Specific tool:
Driving pulley lock wrench 020474Y

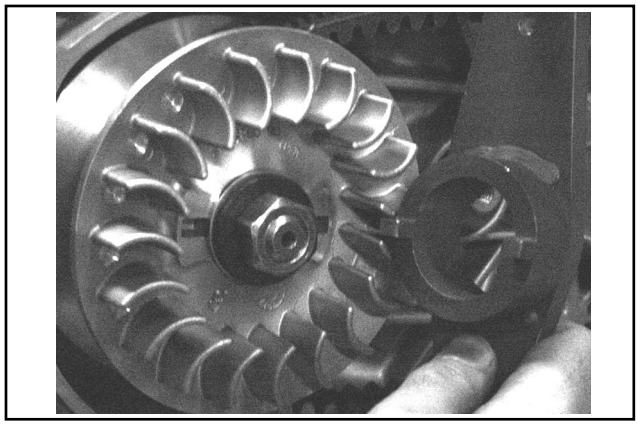

05_009

- First fit the specific tool stop ring on the pulley until the groove is fully in contact.
- Afterwards, insert the tool so that the studs on the ring fit the holes in the tool.
- Tighten, also manually, the two fixing nuts of the tool
- Unloose the central nut.
- Remove the cup washer and the plain washer.
- Remove the fixed driving half pulley.
- Remove the washer to bush connection.

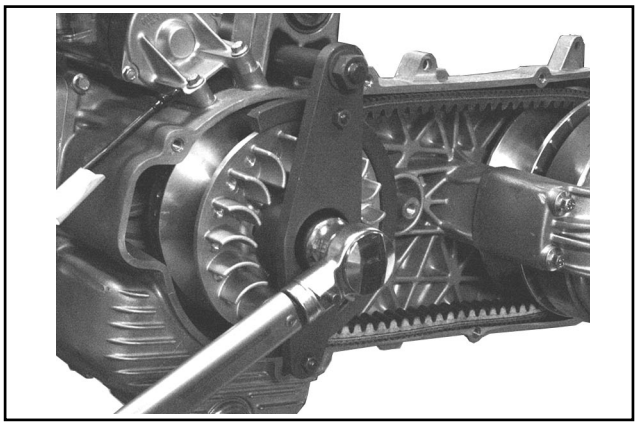

05_010

- Move the belt downwards.
- Hold the roller stop plate, remove the mobile driving half pulley with its bush and rear washer, taking care not to let the rollers come out.

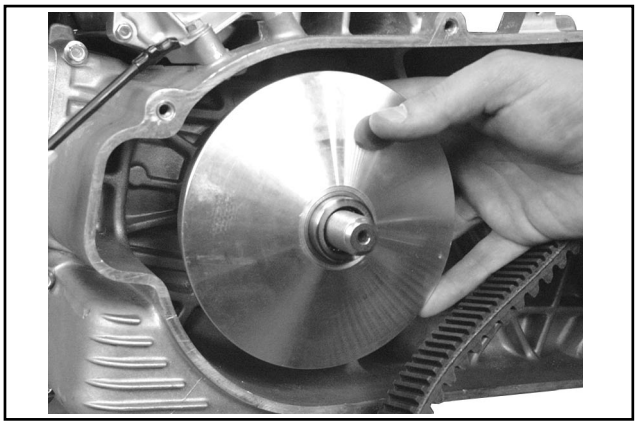

05_011

Driven pulley axle support

- To be able to fit the specific tool for removal of the driven pulley shaft nut, unloose the 2 upper screws of the driven pulley axle support.
- Manually turn the clutch housing as to partially uncover one of the holes in the driven pulley axle support.

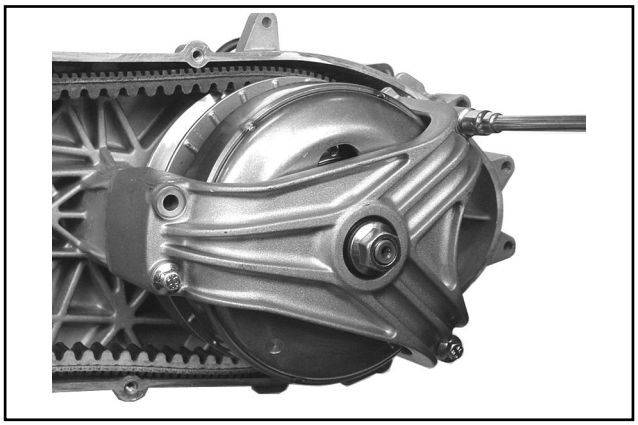

05_012

- Insert the specific tool on the driven pulley axle support, checking that the tooth fits the hole in the housing previously uncovered, and that it is resting on the support.
- Tighten the 2 fixing screws.
- Unloose the driven pulley shaft nut.

Specific tool:
Clutch housing stop tool 020473Y

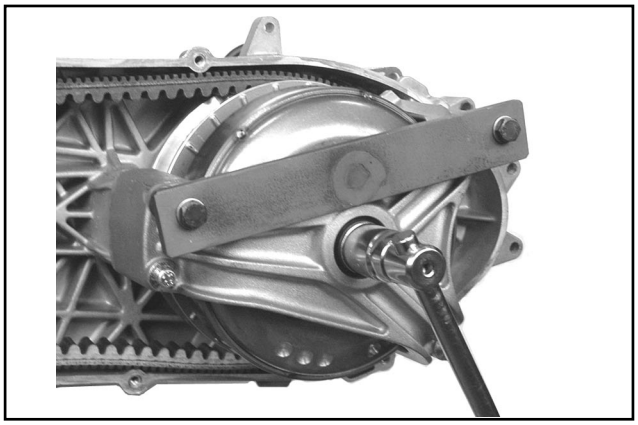

05_013

- Remove the specific tool
- Unloose the 2 remaining fixing screws of the driven pulley axle support.
- Remove the driven pulley axle support and the washer.
- Remove the spacer below.

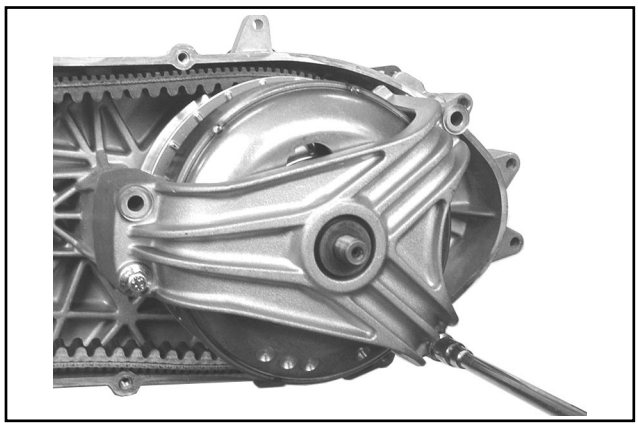

05_014

Clutch housing

- Remove the clutch housing.

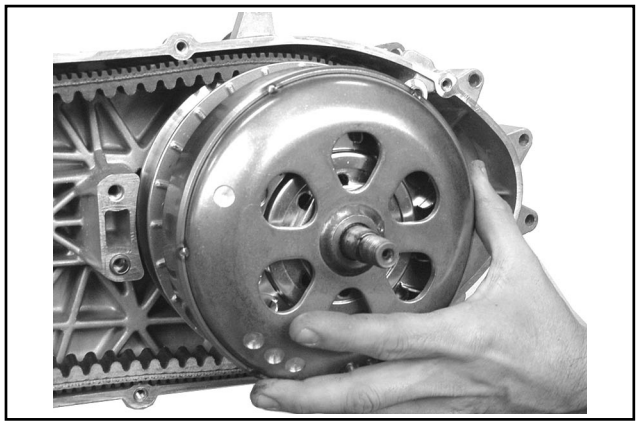

05_015

- Check that the clutch housing shows no signs of wear or damage.
- Measure the clutch housing I.D.

Standard value: 160.2 mm
Max value: 160.5 mm

N.B.: Check that the measured eccentricity is max 0.2 mm

05_016

Driven pulley assembly

- Remove the driven pulley assembly and relevant belt.

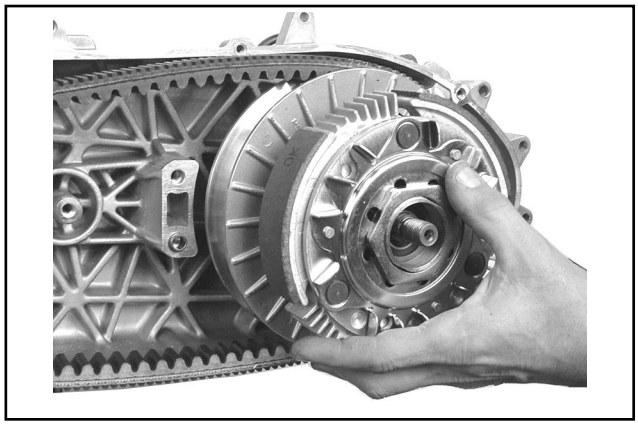

05_017

Clutch disassembly

- Remove the clutch and driven pulley by means of the specific tool;
- Prepare the tool with the pins screwed in the «**E**» position on the internal side;
- Assemble the driven pulley assembly on the tool and insert the pins in the ventilation holes;
- Bring the rear stop screw in contact with the fixed driven pulley, as shown in the figure.

Warning - Put the tool in a vice firmly. Do not overtighten the rear screw to avoid buckling the tool.

- Remove the fixing ring nut with the specific spanner of 55 mm.
- Unloose the tool screw and dismount the driven pulley, clutch, spring with sheath assembly

Specific tools:

Driven pulley spring compressor	**020444Y**
55 mm spanner	**020444Y009**
Ring	**020444Y010**

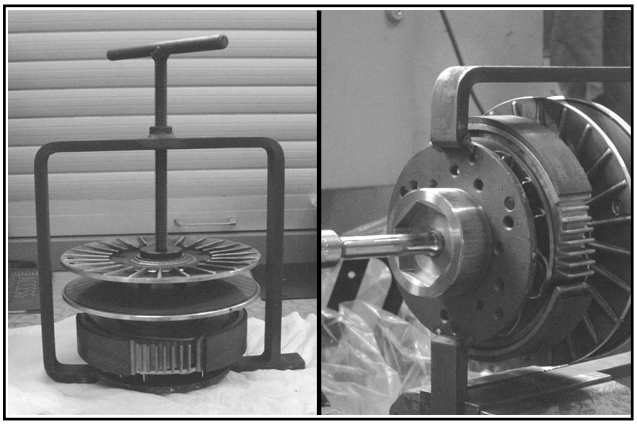

05_019

Pins stop collar

- Remove the collar by means of 2 screwdrivers.

05_020

- Remove the 4 guide pins.
- Remove the mobile driven half pulley.

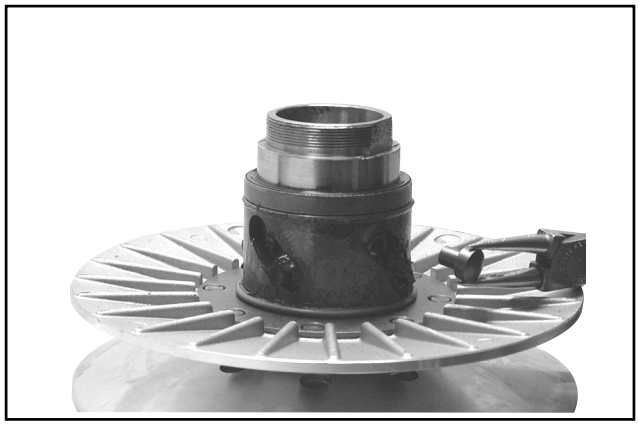

05_021

Fixed driven half pulley bearings

- Check that the bush shows no signs of wear or damage; if necessary, replace the fixed driven half pulley.
- Remove the stop ring with the pliers.

05_022

- Remove the ball bearing by inserting the specific tool in the roller bearing.

N.B.: Hold the pulley to avoid damaging the thread.

Specific tools:

Handle	**020376Y**
24 mm adapter	**020456Y**
20 mm guide	**020363Y**

N.B.: If the bearings are overhauled with the driven pulley unit assembled, make sure to support the unit with bell 001467Y002.

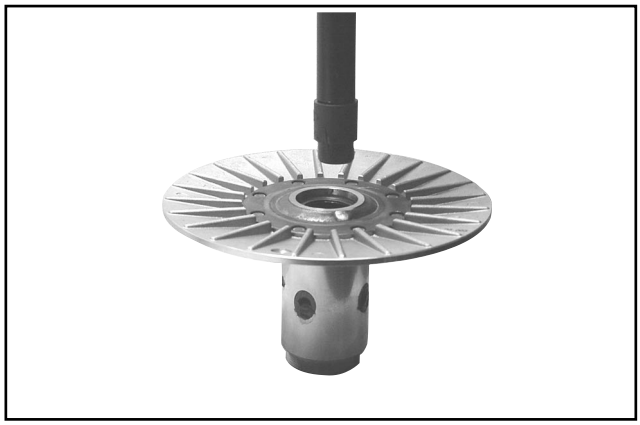

05_023

- Remove the roller bearing by means of the specific tool, supporting the fixed half pulley with the bell.

Specific tools:

Handle	**020376Y**
28x30 mm adapter	**020375Y**
25 mm guide	**020364Y**
Bell	**001467Y002**

05_024

Fixed driven half pulley

- Check the belt contact surface out for signs of wear.
- Measure the pulley bush O.D.

Minimum allowed diameter: 49.96 mm
Standard diameter: 49.965 mm

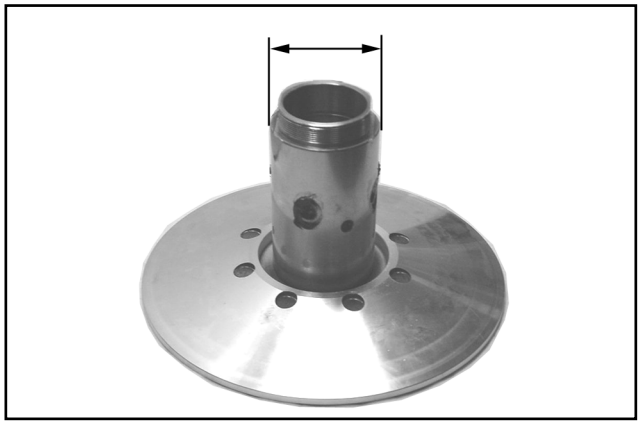

05_025

Mobile driven half pulley

- Check the belt contact surface out for signs of wear.
- Remove the 2 internal and external O rings.
- Measure the mobile half pulley bush I.D.

Maximum allowed diameter: 50.08 mm
Standard diameter: 50.085 mm

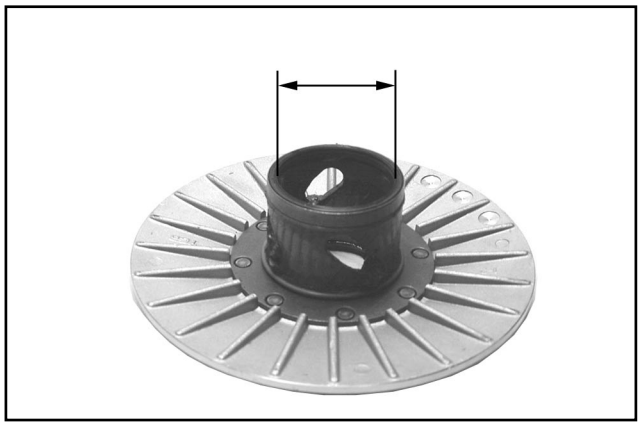

05_026

Fixed driven half pulley bearings assembly

- Fit a new roller bearing using the specific tool

N.B.: Put the bearing and the incorporated oil seal on the outside.

- Hold the half pulley to avoid damaging the thread. Operate with tool 001467Y002, with the driven pulley unit completely assembled.

Specific tool:

Driven pulley roller case tool	**020478Y**
Bell	**001467Y002**

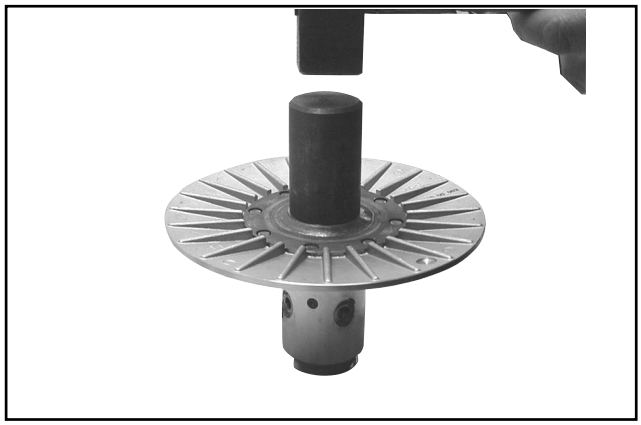

05_027

- Fit a new ball bearing by means of the specific tool.

Specific tools:

Handle	**020376Y**
37 mm adapter	**020477Y**
20 mm guide	**020363Y**

- Fit the stop snap ring.

05_028

Driven pulley assembly

- Fit the new oil seals
- Fit the new O rings

N.B.: The O rings come supplied in 2 sizes. The larger one is installed on the work end radius, half pulley base.

- Fit the half pulley on the bush taking care not to damage the upper O ring.

05_029

- Check the pins and collar condition, and then reassemble them.
- Lubricate the driven pulley assembly with a hook-bill greaser. Apply 10 gr. of TUTELA MRM2 grease through one of the holes inside the bush until grease comes out of the opposite hole.

Spring

- Measure the free length of the mobile driven half pulley spring.

Standard length: 125.5 mm
Limit allowed after use: 120 mm

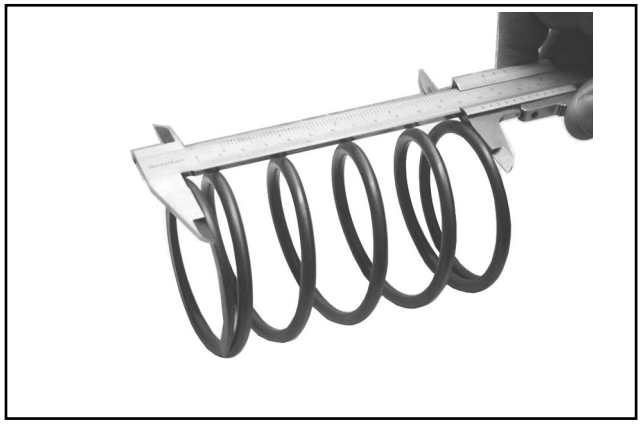

05_030

- Check the thickness of the clutch weights friction material.
  Minimum allowed thickness: 1 mm
- The weights must show no traces of grease. If necessary, check the seals of the driven pulley assembly.

N.B.: During the running in phase the weights must have a central contact surface and must not be different one from the other to avoid the clutch jerking

- Do not open the weights with the tools to avoid the return springs load variation.

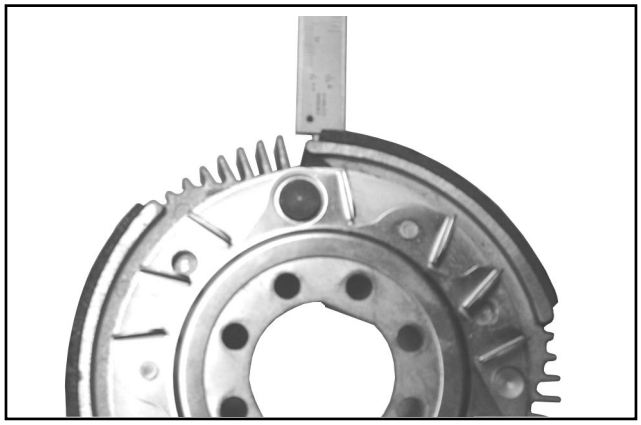

05_031

Driving belt

- Check that the driving belt is not damaged.
- Check the belt width.

Minimum width: 25 mm
Standard width: 26.2 mm

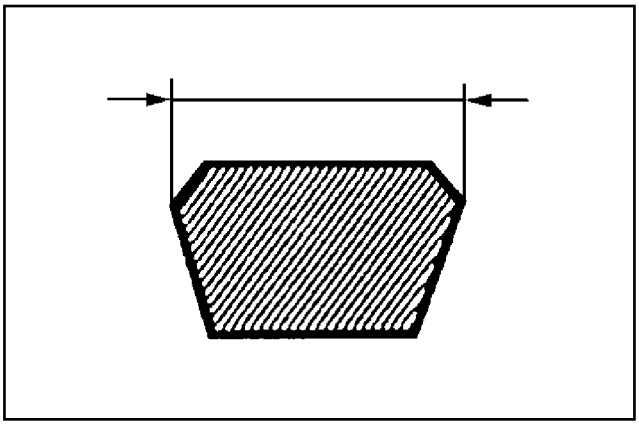

05_034

Clutch reassembly

- Prepare the specific tool as already done during the disassembly phase;
- Preassemble the driven pulley unit with the driving belt according to its direction of rotation.
- Insert the driven pulley unit, spring with sheath and clutch in the tool.

Specific tools:
Driven pulley spring compressor 020444Y
Adapter ring 020444Y010

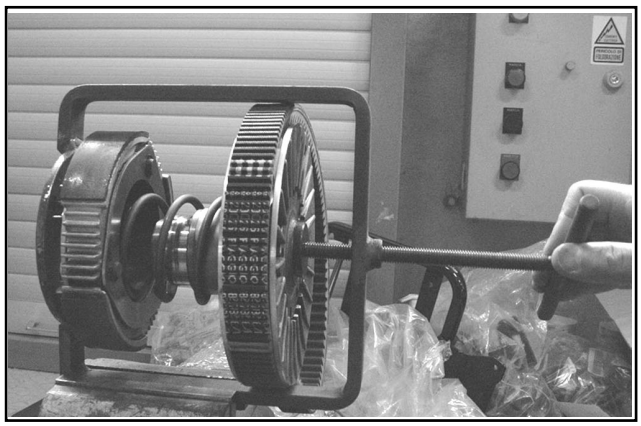

05_032

- Compress the spring and insert the clutch on the driven pulley bush.

N.B.: Take care not to damage the sheath or the bush threaded end.
- Screw the ring nut manually and then tighten it with the specific wrench to the prescribed torque.

Tightening torque:
Clutch ring nut: 65 - 75 N·m
Specific tool:
55 mm wrench: 020444Y009

- To facilitate the reassembly operation, turn the mobile driven pulley and fit the belt on the smaller diameter.

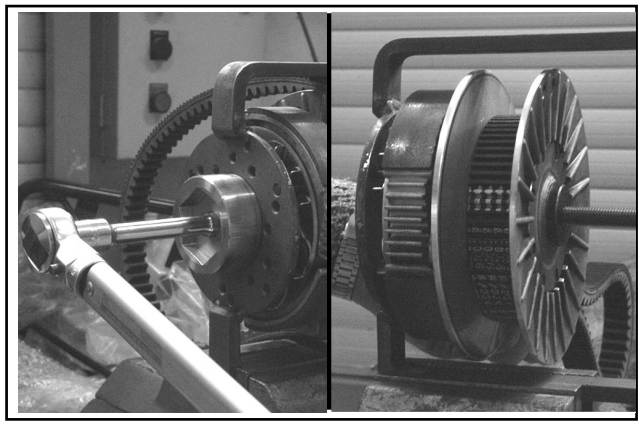

05_033

Mobile driving half pulley

- Check that the internal bushes shown in the figure show no signs of anomalous wear. Measure the I.D.

Maximum allowed diameter: 30.12 mm
Standard diameter: 30.021 mm

Warning - Do not lubricate or clean the bushes.

- Measure the O.D. of the pulley sliding bush shown in the figure.

Minimum allowed diameter: Ø 29.95 mm
Standard diameter: Ø 29.959 mm

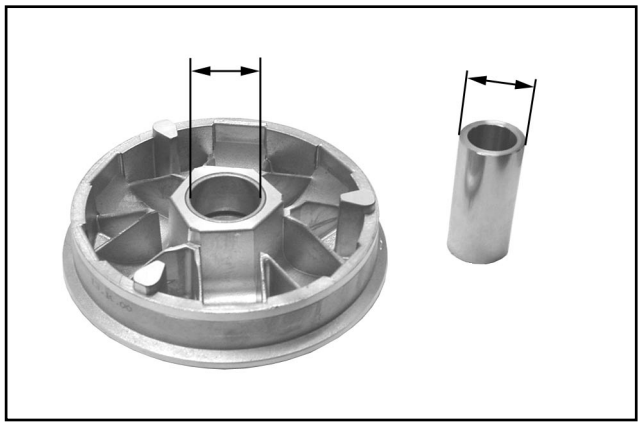

05_035

- Check that the rollers are not damaged or worn.

Minimum allowed diameter: Ø 24.5 mm
Standard diameter: Ø 24.9 mm

- Check that the shoes of the roller stop plate are not worn.
- Check the rollers housing and belt contact surfaces condition on both half pulleys.

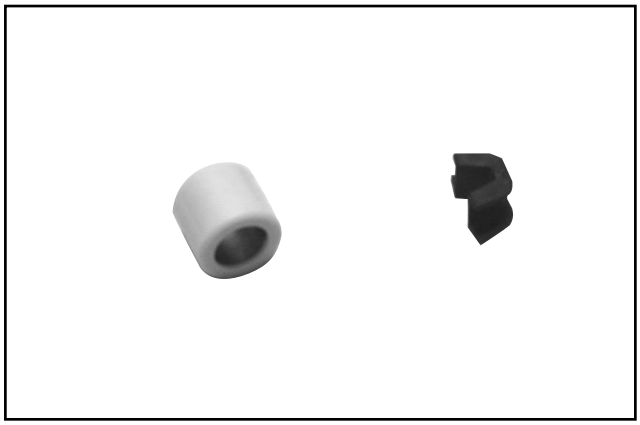

05_036

Rollers housing assembly

- Fit the spacer with the internal beveling facing the insertion side.

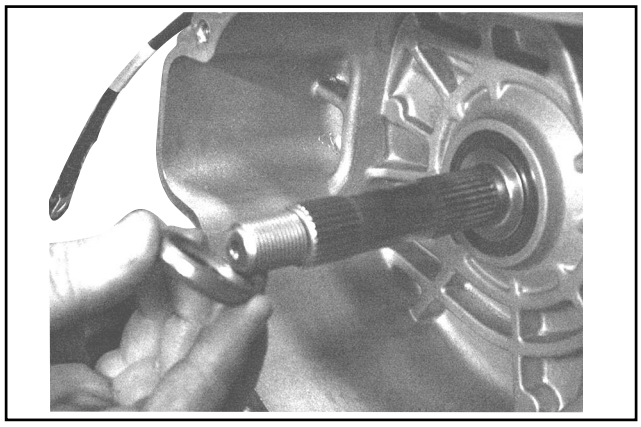

05_041

- Put the rollers in the half pulley as shown in the figure.
- The covered side must rest on the internal thrust side of the roller housing.

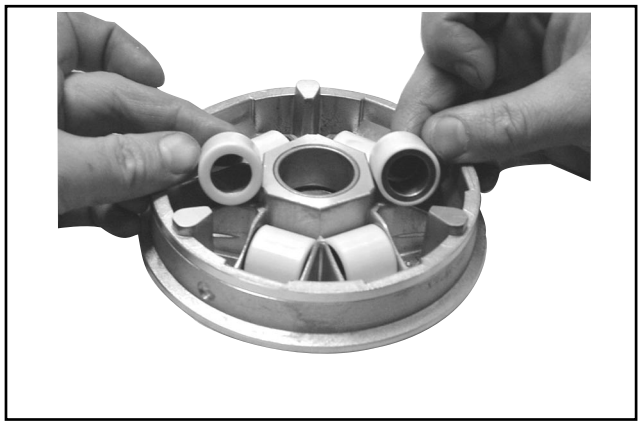

05_042

- Assemble the half pulley with the rollers stop plate and the sliding shoes.

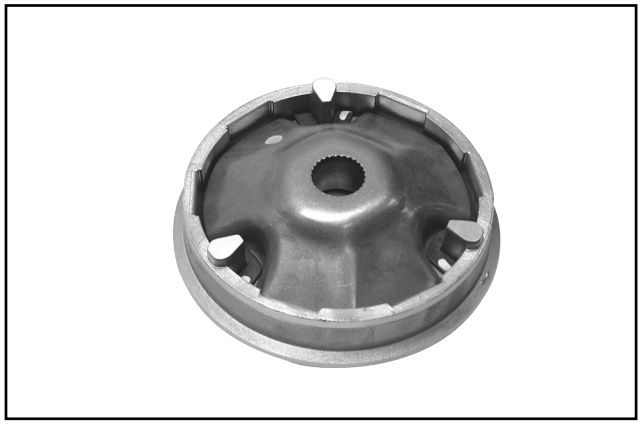

05_043

- Fit the half pulley on the driving shaft.
- Fit the spacer bush.

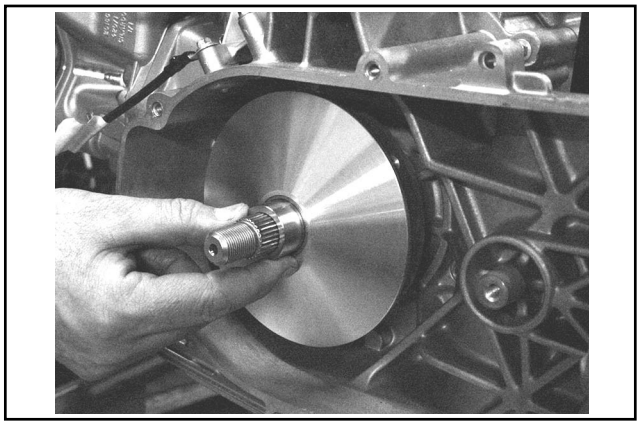

05_044

Driven pulley unit assembly

- Fit the driven pulley unit and relevant belt.

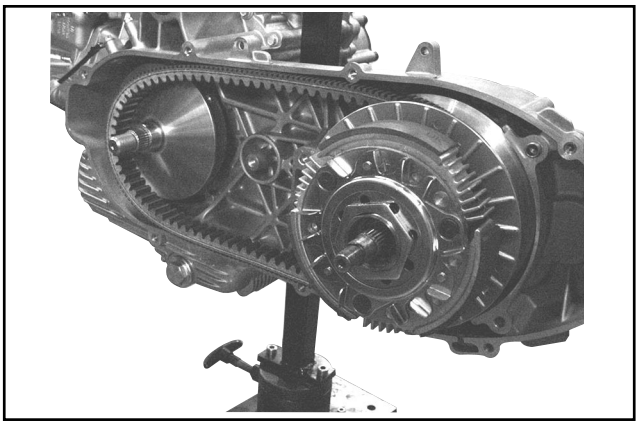

05_045

Housing assembly

- Fit the housing and the spacer

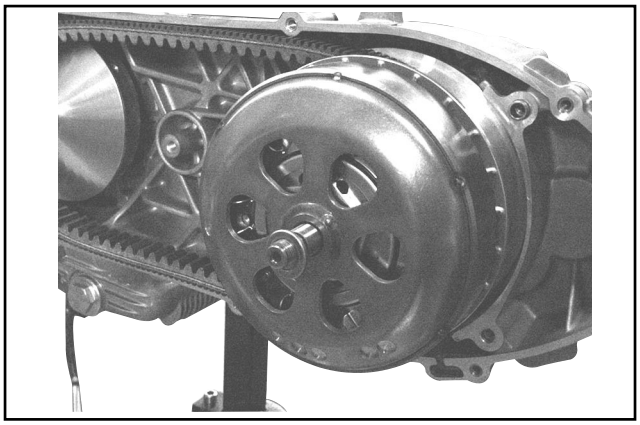

05_046

Driven pulley axle support assembly

- Make sure the 2 centering dowels are properly fitted in the crankcase.

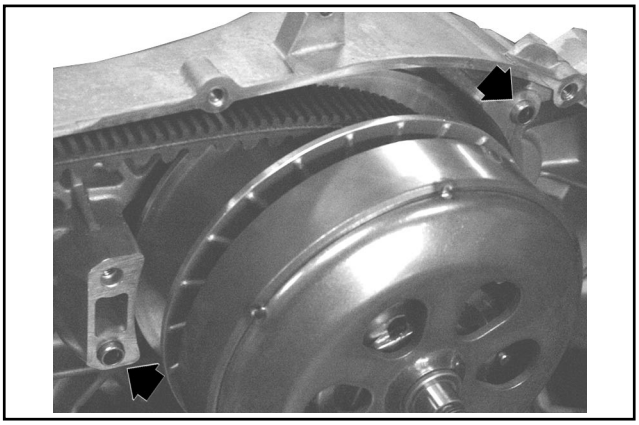

05_047

Driven pulley axle support bearings disassembly

- Check that the bearing turns freely. Replace the bearing if necessary.
- Remove the snap ring.

05_037

- Hold the driven pulley axle support by means of the specific tool 001467Y002.
- Remove the bearing by means of the specific tool.

N.B.: If the bearing decay has caused the external race to lose strength, replace the driven pulley axle support.

Specific tools:

Bell	**001467Y002**
Handle	**020376Y**
28x30 mm adapter	**020375Y**
17 mm guide	**020439Y**

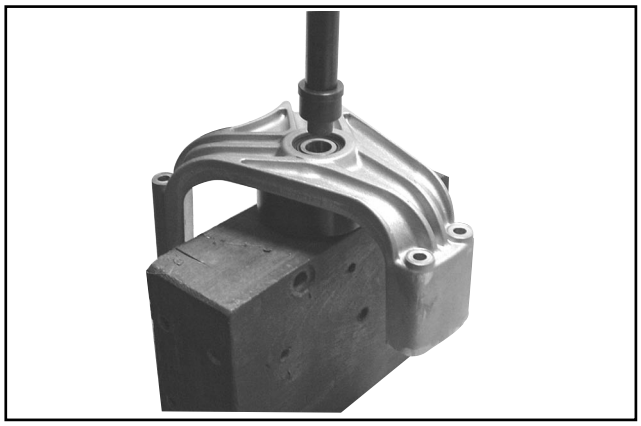

05_038

Driven pulley axle support bearing assembly

- Heat the driven pulley axle support with the thermal gun.

Specific tool:

Air heater	**020151Y**

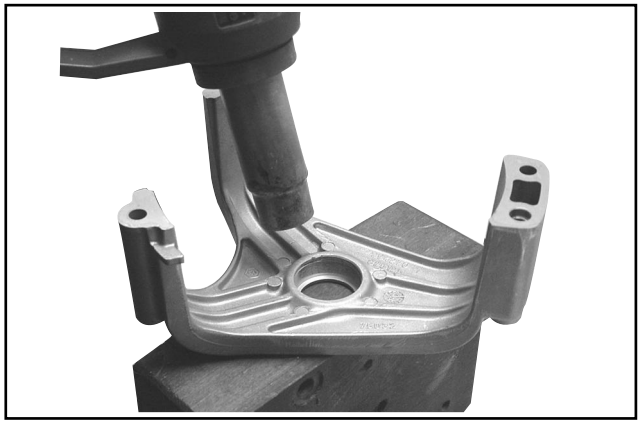

05_039

- Fit the bearing on the specific tool. Grease it to prevent it from coming out.
- Refit the new bearing by means of the specific tool.
- Refit the snap ring.

Specific tools:

Handle for drifts	**020376Y**
37x40 mm adapter	**020358Y**
17 mm guide	**020439Y**

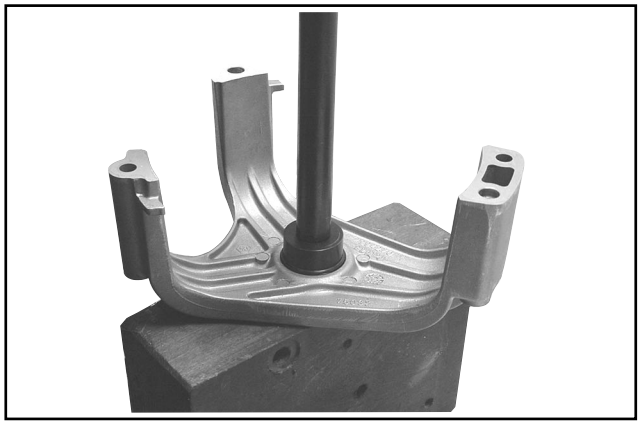

05_040

- Fit the driven pulley axle support and tighten the two lower screws.

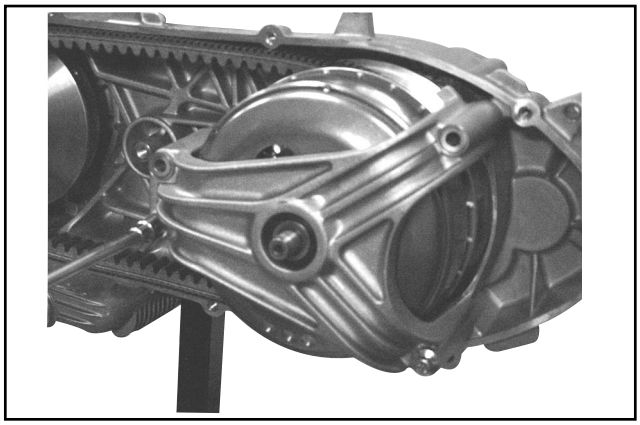

05_048

- Fit the washer and the nut.

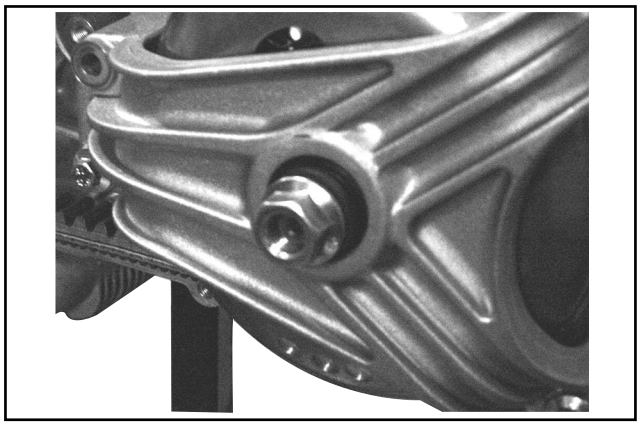

05_049

- Insert the specific tool tooth in the hole on the housing.
- Tighten the 2 screws making sure that the catch is in contact with the driven pulley axle support.

Specific tool:
Clutch housing lock tool 020473Y

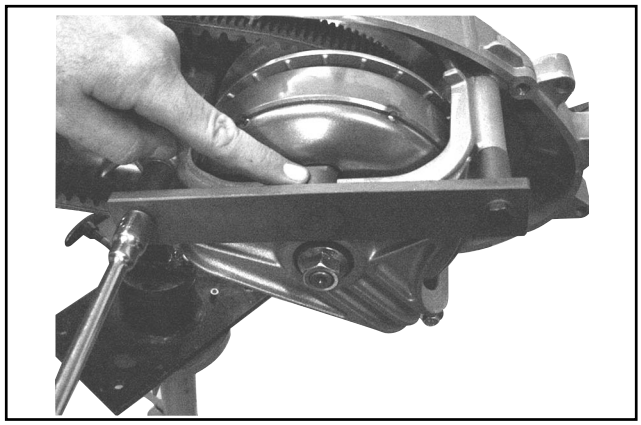

05_050

- Tighten the housing fixing nut to the prescribed torque.

Tightening torque:
Driven pulley shaft nut: 90 - 92 N·m

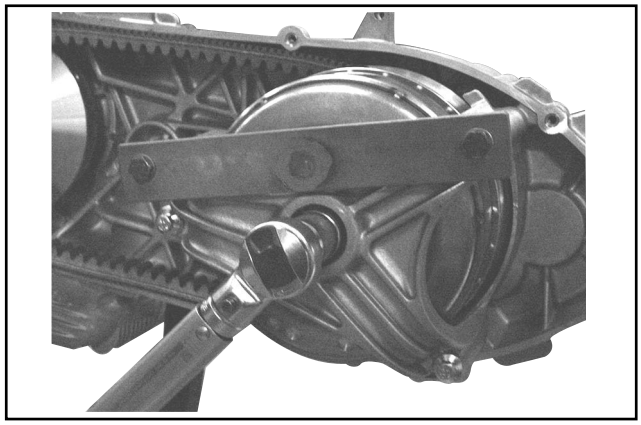

05_051

- Remove the specific tool
- Insert the 2 remaining fixing screws of the driven pulley axle support and cross-tighten the 4 screws to the prescribed torque.

Tightening torque:
Driven pulley axle support fixing screws: 23 - 26 N·m

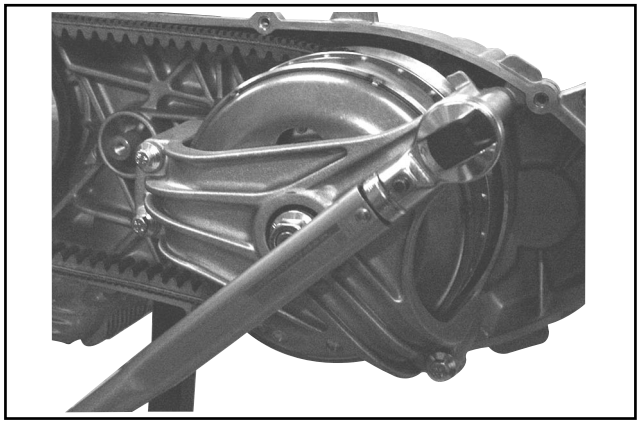

05_052

Fixed driving half pulley assembly

- Fit the spacer

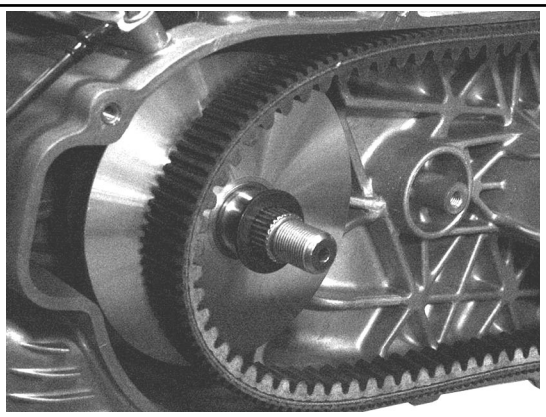

05_053

- Fit the fixed driving half pulley making sure it is in contact with the spacer and with the sliding bush of the mobile driving pulley

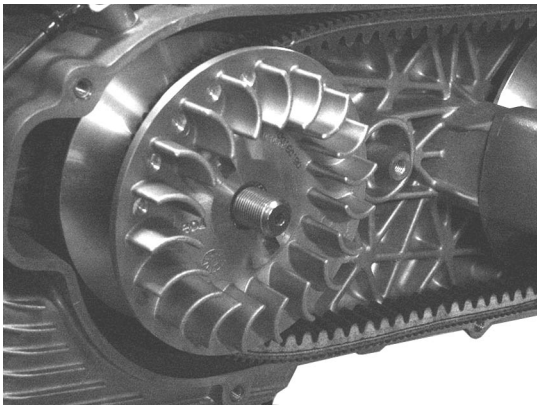

05_054

- Fit the plain washer and the cup washer as shown in the figure.

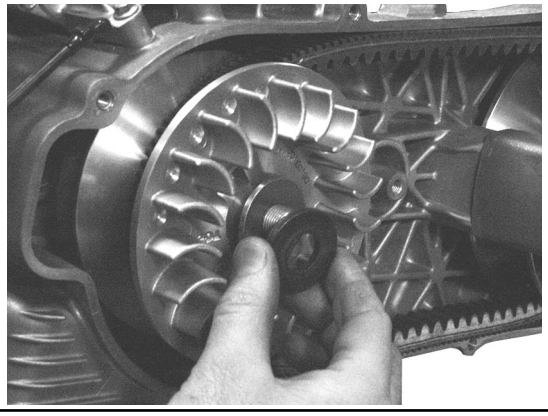

05_055

- Insert the nut in its previous position (nut side in contact with the cup washer).

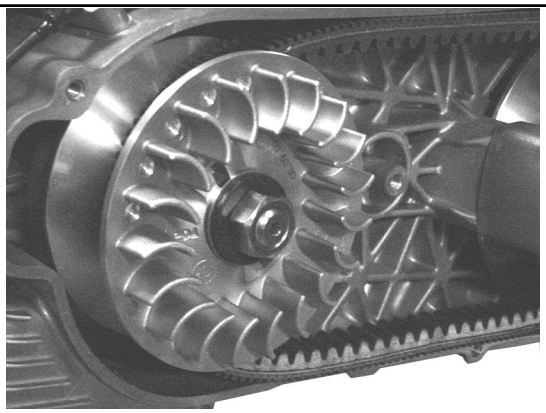

05_056

- Turn the pulley central nut aligning its holes horizontally to be able to install the specific tool.

N.B.: Make sure that the lock wrench fits easily in the pulley and engine crankcase.

Specific tool:
Driving pulley lock wrench 020474Y

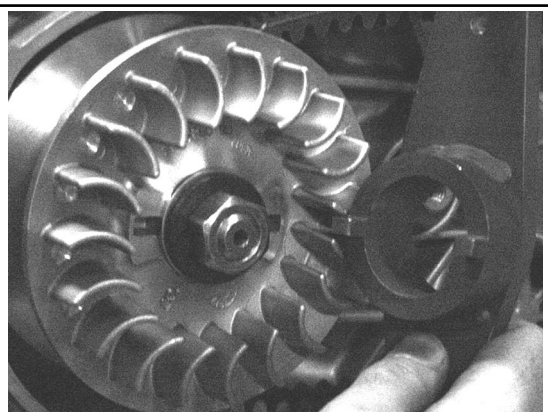

05_009

- Fully insert the stop ring from the rear side.
- Fit the tool by drawing the nuts near manually and making sure it is on a flat surface.
- Tighten the driving pulley fixing nut to the prescribed torque.
- Remove the specific tool.

Tightening torque:
Driving pulley nut: 157 - 172 N·m

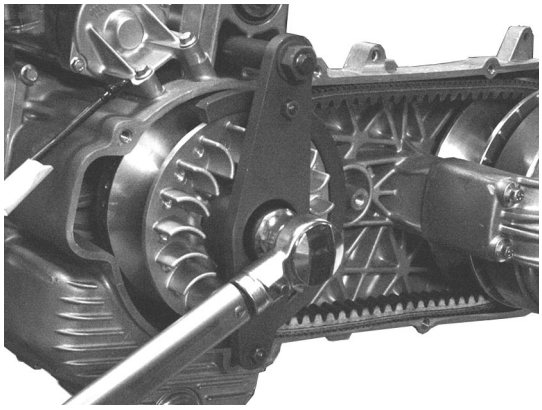

05_010

Belt antiflapping roller assembly

- Fit the belt antiflapping roller with the belt containment edge to the engine crankcase side.
- Tighten the central screw to the prescribed torque.

N.B.: Turn the driven pulley and/or the driving pulley until the belt is properly tensioned.

Tightening torque:
Antiflapping roller screw: 16.7 - 19.6 N·m

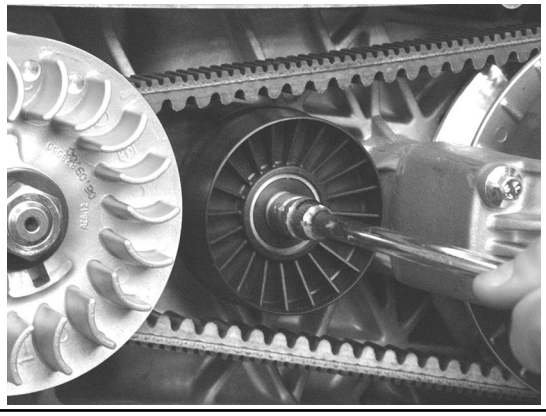

05_008

Transmission cover

N.B.: Check the transmission air filter metal net condition. If damaged, replace it. If necessary, clean it by blowing compressed air.

- Fit the transmission cover.
- Fully tighten the 7 fixing screws to the prescribed torque.

Tightening torque:
Transmission cover screws: 10.8 - 12.8 N·m

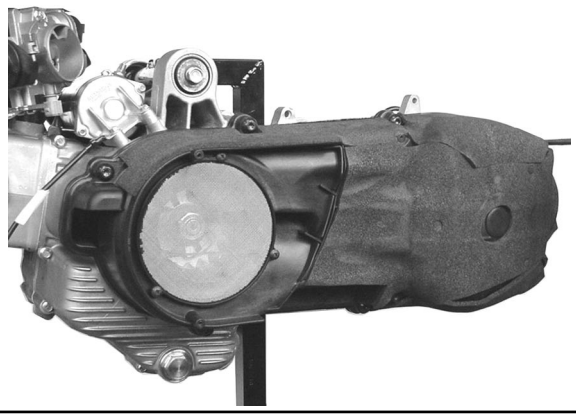

05_007

External transmission cover

N.B.: Make sure that the air intake and the three air outlets are completely free.

- Fit the plastic external transmission cover;
- Tighten the 5 fixing screws to the prescribed torque.

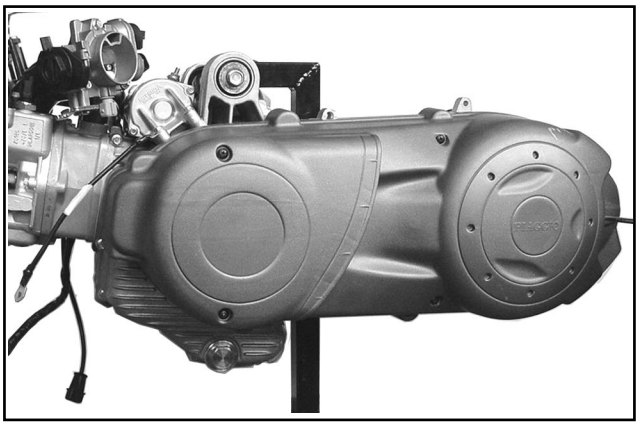

05_006

3

TABLE OF CONTENTS

FINAL REDUCTION 4

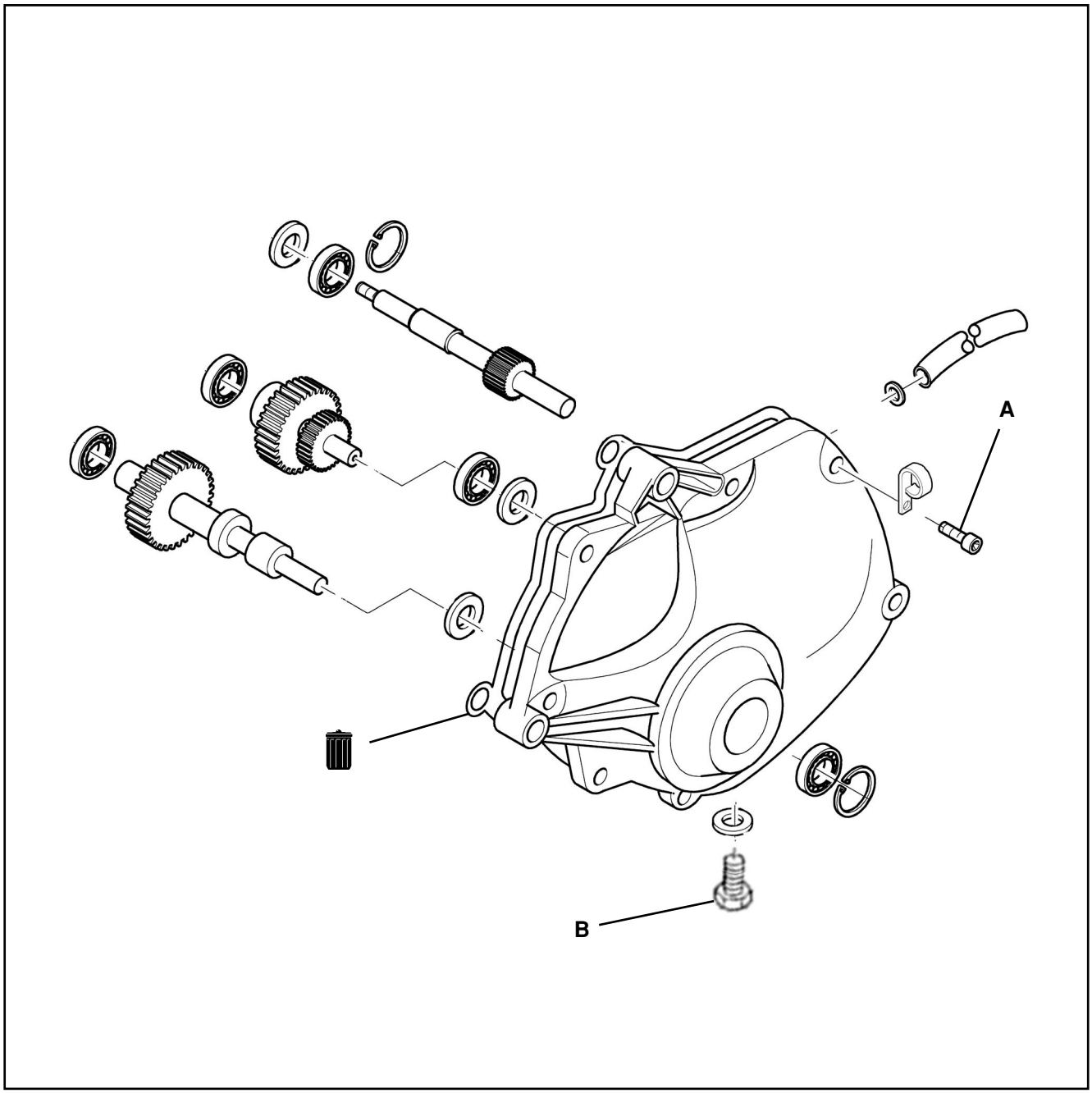

LUBRICATE WITH OIL
APPLY PRODUCT
WARNING: HANDLE WITH CARE
LUBRICATE WITH GREASE
CLEAN WITH CARE
ALWAYS REPLACE

REFERENCE	A	B	C	D	E	F	G	H	I	L	M	N	O	P	Q
QUANTITY	6	1													
TORQUE N·m	24-27	15-17													

TABLE OF CONTENTS

FLYWHEEL COVER 5

FLYWHEEL COVER

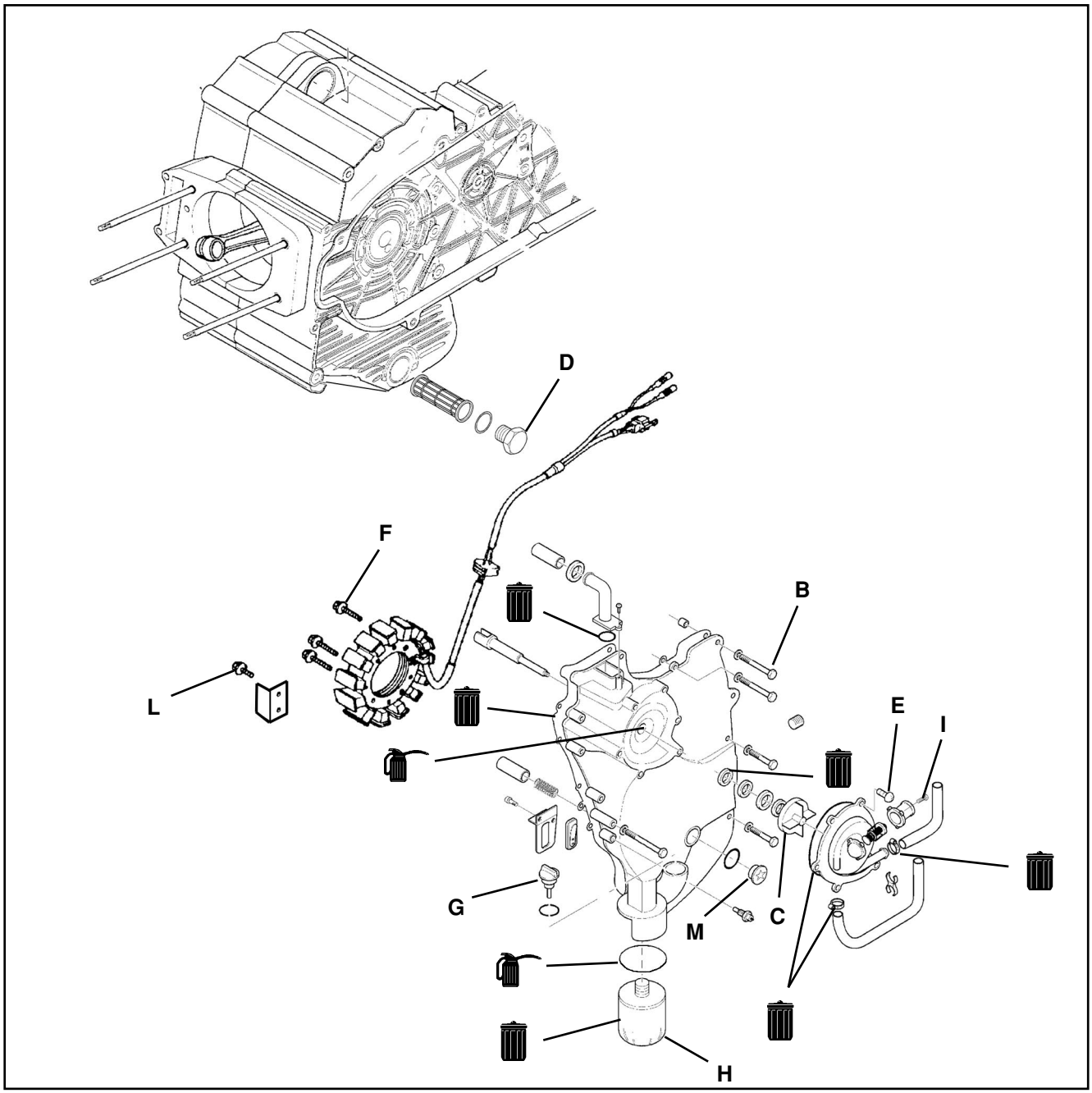

LUBRICATE WITH OIL

APPLY PRODUCT

WARNING: HANDLE WITH CARE

LUBRICATE WITH GREASE

CLEAN WITH CARE

ALWAYS REPLACE

REFERENCE	A	B	C	D	E	F	G	H	I	L	M	N	O	P	Q
QUANTITY	6	14	1	1	6	3	1	1	2	2	1				
TORQUE N·m	3-4	11-13	4-5	24-30	3-4	8-10	1.5-2.5	12-16	1.5-2	3-4	3.5-4.5				

- Disassemble the flywheel cover by removing the 2 cooling system sleeves
- Remove the 4 clamps shown in the figure

N.B.: The clamps must be replaced. Remove the clamps by opening them with a screwdriver or by cutting them. Take care not to damage the plastic unions

05_081

- Remove the cooling tube bracket from the manifold fixing.

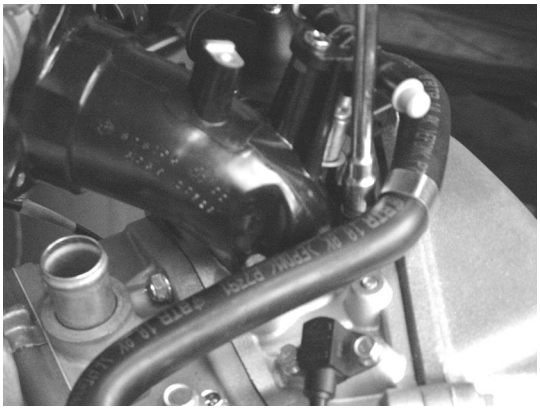

05_082

Thermostat cover disassembly

- Unloose the 3 fixing screws and remove the thermostat cover.

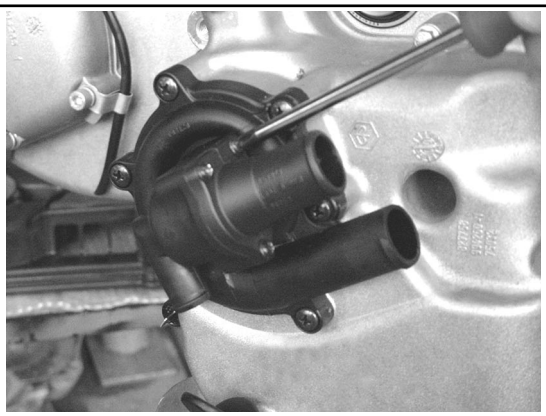

05_083

- Remove the thermostat.

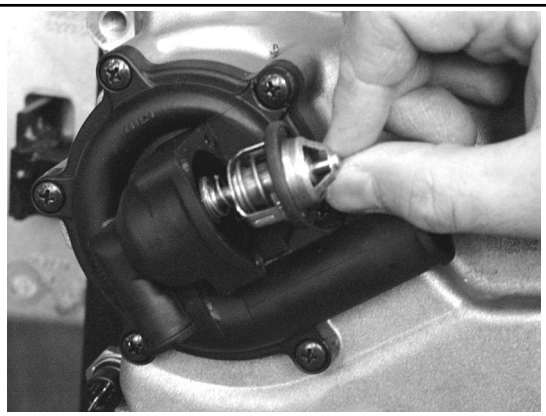

05_084

Water pump cover disassembly

- Unloose the 6 fixing screws and remove the water pump cover and relevant O ring.

N.B.: If necessary, disassemble the pump cover complete with thermostat and sleeves.

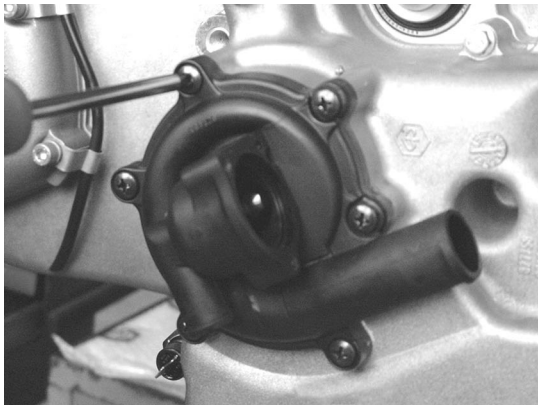

05_085

Flywheel cover disassembly

- Drain the engine oil by removing the drain plug.
- Collect the oil in a suitable container.

05_086

- Remove the prefilter.

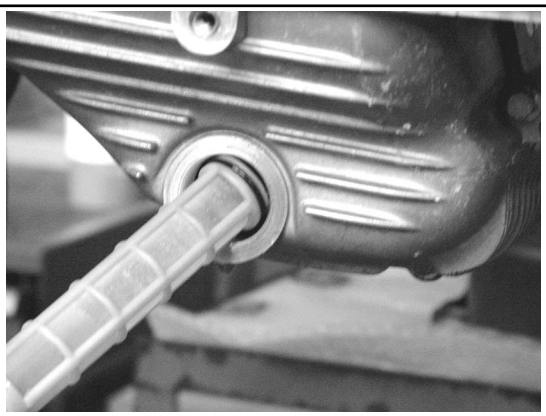

05_087

- Remove the oil filter by means of a suitable wrench.

05_088

- Unloose the 14 fixing screws.
- Remove the flywheel cover and relevant gasket, and the stand stop bracket..

N.B.: Screws come supplied in 3 different lengths plus 2 for the stand stop. Take note of their positions.

Warning - Avoid any interferences between the stator and rotor while removing the cover.

Warning - Do not drop the bypass valve and relevant spring.

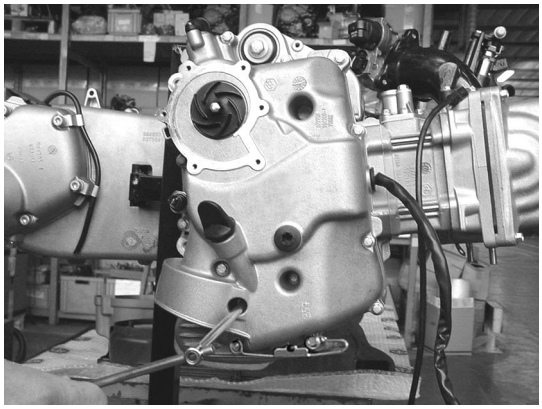

05_089

Flywheel cover components disassembly

- Remove the bypass and relevant spring.
- Remove the seal gasket

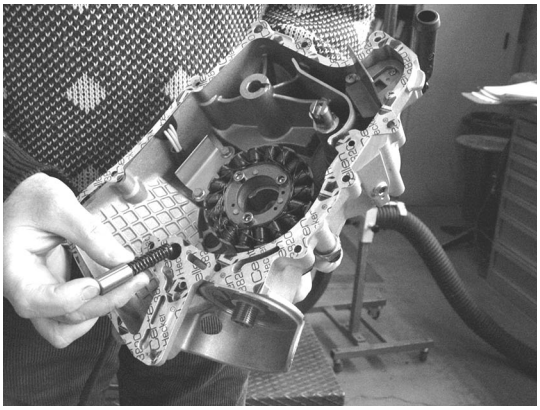

05_090

Stator

- Remove the 2 fixing screws and the harness guide bracket.

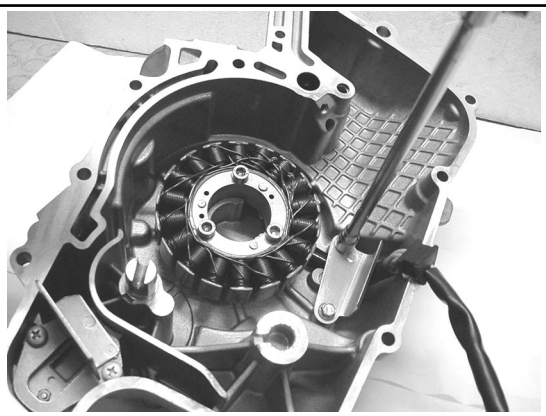

05_091

- Unloose the 3 fixing screws and remove the stator complete with the harness.

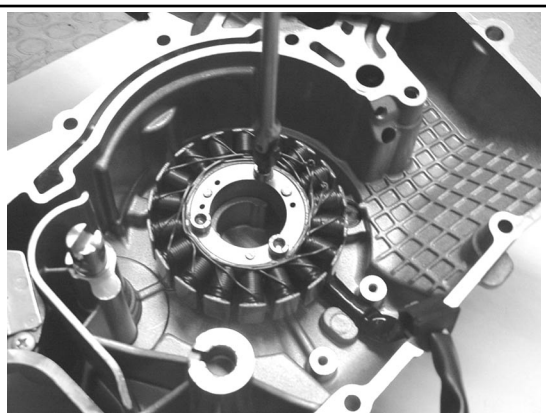

05_092

- Unloose the 2 fixing screws and remove the support of the reed valve with gate.

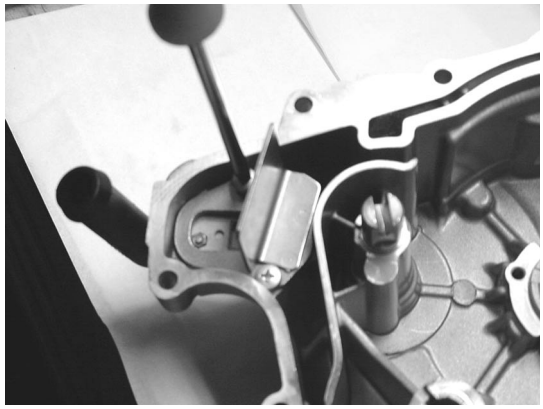

05_093

- Remove the blow-by reed valve and relevant seal gasket

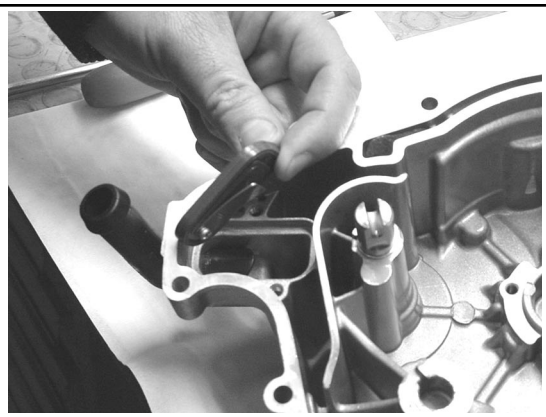

05_094

- Unloose the fixing screw and remove the gas outlet pipe and relevant O-ring

05_095

- Remove the water pump rotor by unscrewing it from its shaft.

N.B.: The threading goes in the r.h. direction. Prevent the shaft from turning by inserting a 12 mm wrench in the drive.

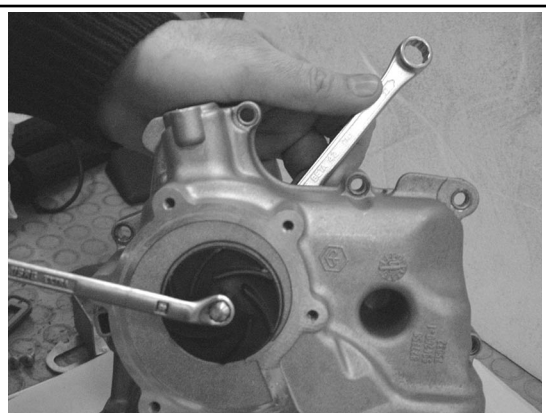

05_096

- Remove the shaft and relevant stop washer.

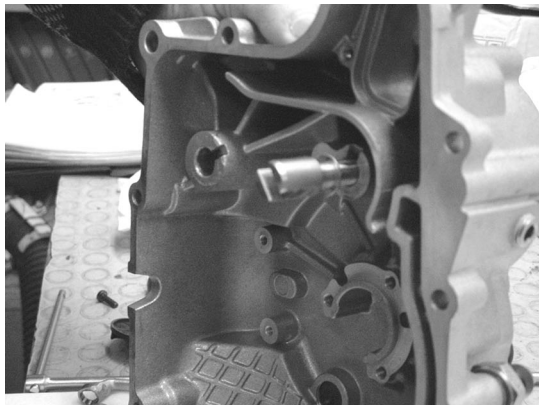

05_097

- Remove the O-ring

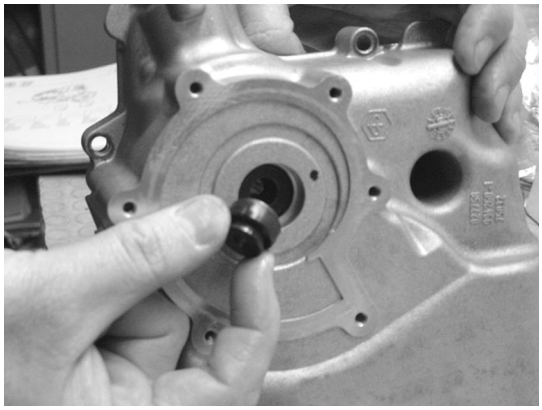

05_098

- Remove the ceramic ring and relevant gasket.

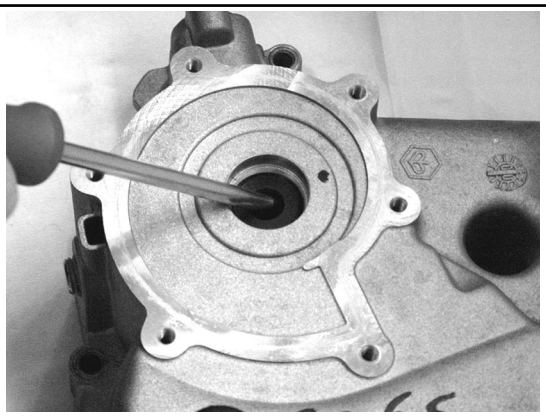

05_099

- Remove the O ring for the pump shaft lubrication by means of a properly shaped tool.

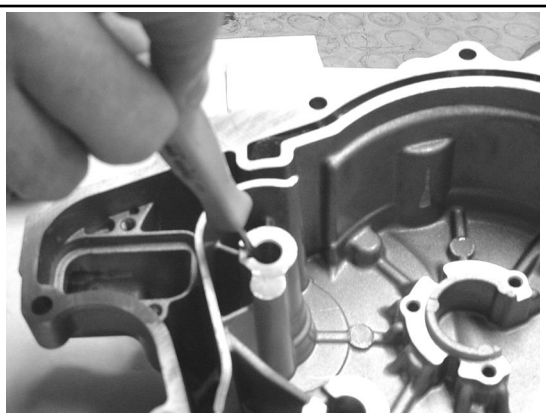

05_100

- Remove the engine oil dipstick and the plug of the valve gear timing reference hole
- Remove the oil minimum pressure sensor.

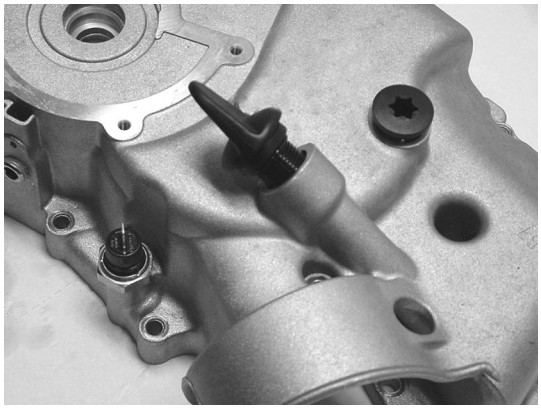

05_101

Checking the cover case components
Cover case

- Check that the case coupling surface shows no signs of wear or deformation.
- Check that the bypass valve seat, torque limiter support and water pump shaft support show no signs of wear

Bypass housing hole diameter: 13.9 mm
Diameter of starting gear shaft support: 12 mm
Diameter of pump shaft support: 8 mm

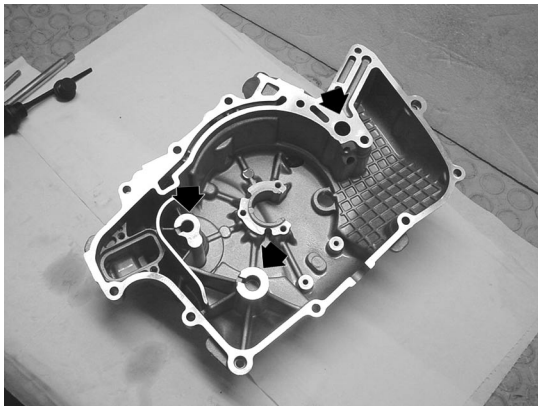

05_102

- Check that the coupling surface and the oil filter pipe show no signs of wear or deformation.

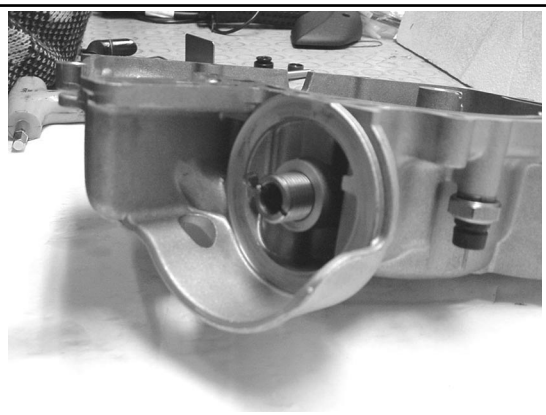

05_103

Stator

- Check the stator and relevant harness condition.

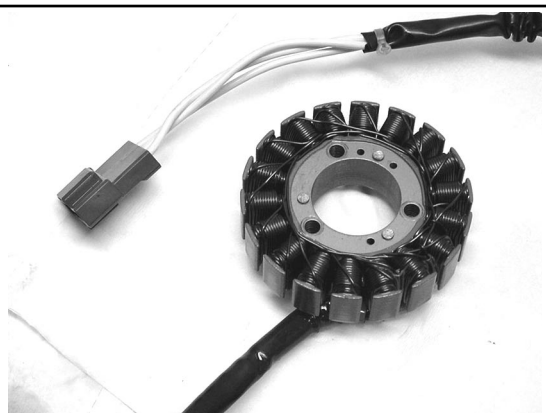

05_104

- Check the 3 phases continuity.

N.B.: The indicated values have been measured at ambient temperature. Higher values will be measured with stator at operative temperative.

Approximate resistance of each phase: 0.2 - 1 Ω

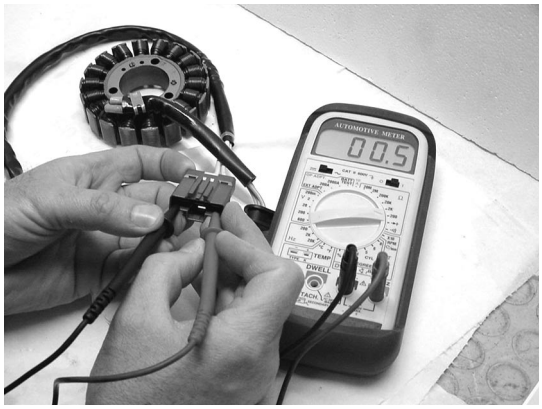

05_105

- Check the earth insulation of each phase.

- If troubles are noticed, remember to carefully check the harness as this is realized with 2 types of cables: stiff cables near the stator, and soft cables near the connector.

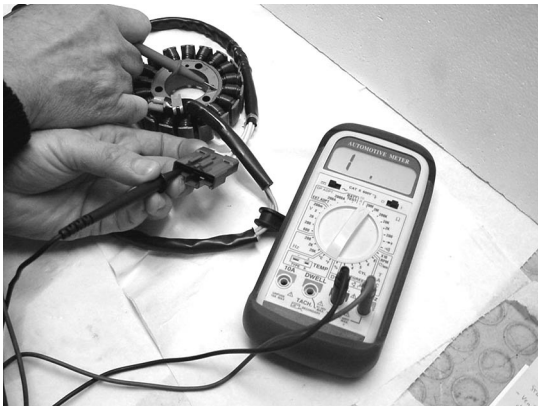

05_106

- Check that the winding does not interfere with the fixing screw heads.

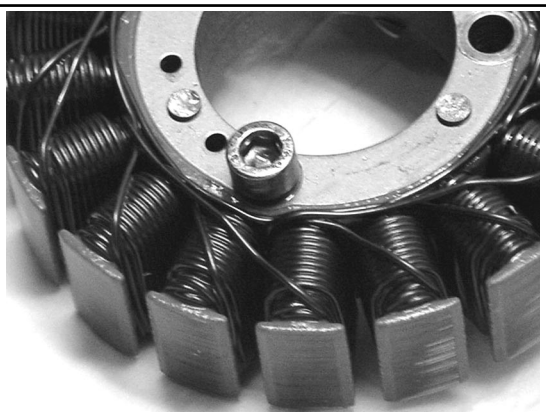

05_107

Bypass piston and spring

- Check that the bypass outside diameter shows no signs of damage or scoring.

Outside diameter: 10.5 mm

- Check the spring free length.

Standard length: 65.2 mm
Limit length after use: 64.0 mm

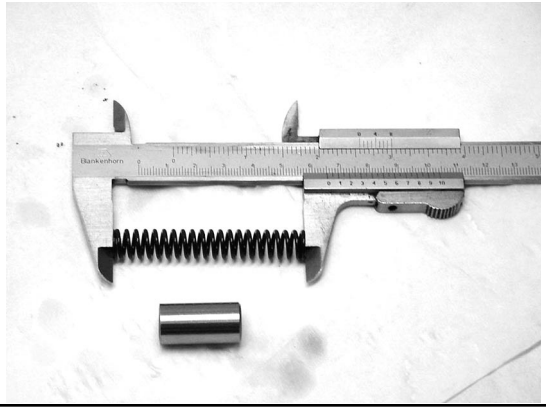

05_108

Water pump shaft

- Check that the water pump shaft shows no signs of wear on the part in contact with the case, in the oil seal working area, and on the drive.

- Check that the ceramic seal working areas are not scored or worn.

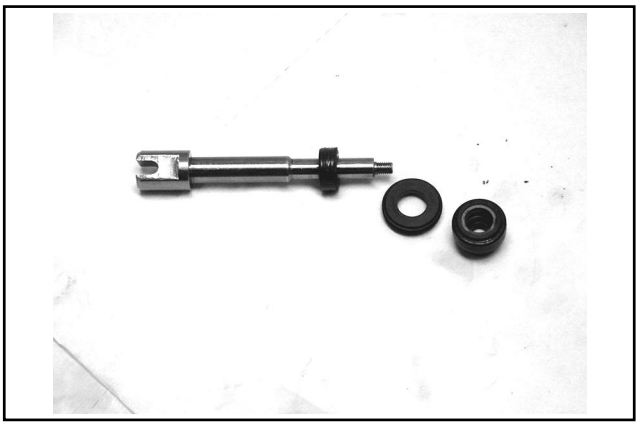

05_109

Water pump rotor

- Check that the rotor is not deformed or cracked.
- Check that the plastic rotor is perfectly integral with the metal part.

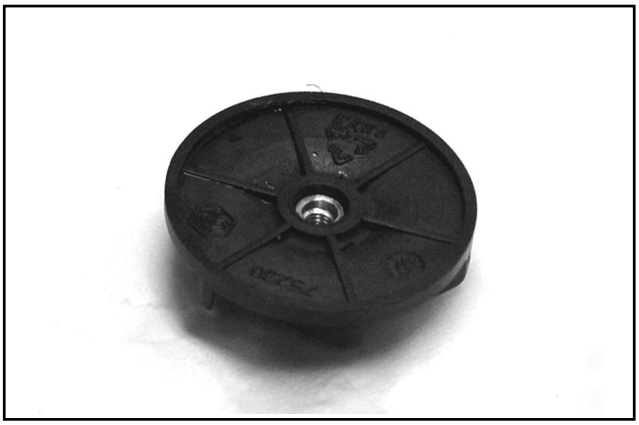

05_110

Checking the water pump cover

- Check that the water pump cover is not deformed or cracked.
- Check the O ring condition.

05_111

- Check that the coupling surfaces of the thermostat cover and the cooling bypass lock slot are not worn or cracked.

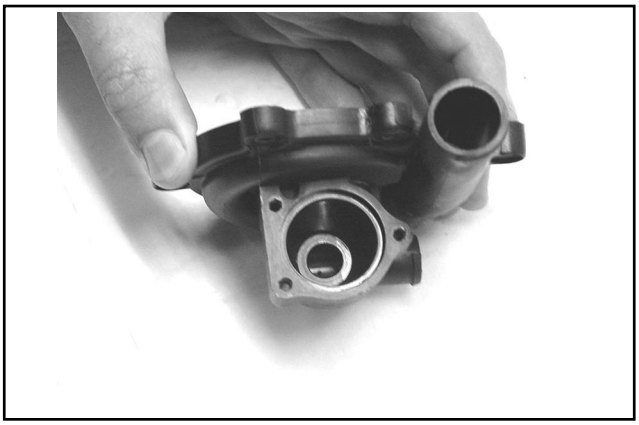

05_112

Reed valve

- Check that the blow-by circuit reed closes correctly.

05_113

Assembling the flywheel cover components

- Make sure that all the components are well clean before reassembling them.
- Carefully check all the cover case lubrication ducts, in particular:
- The 3 bypass channels.

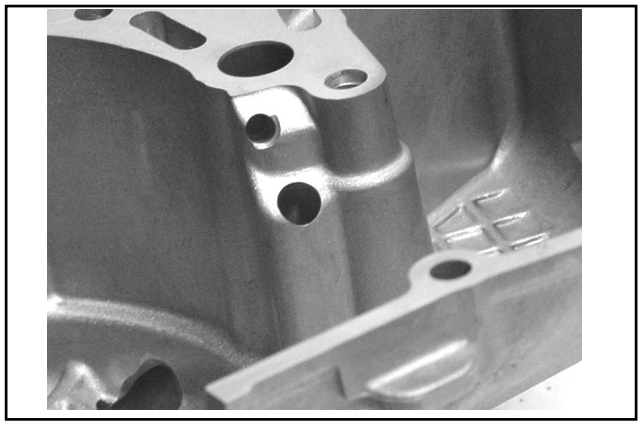

05_114

- Oil supply duct to water pump shaft support.

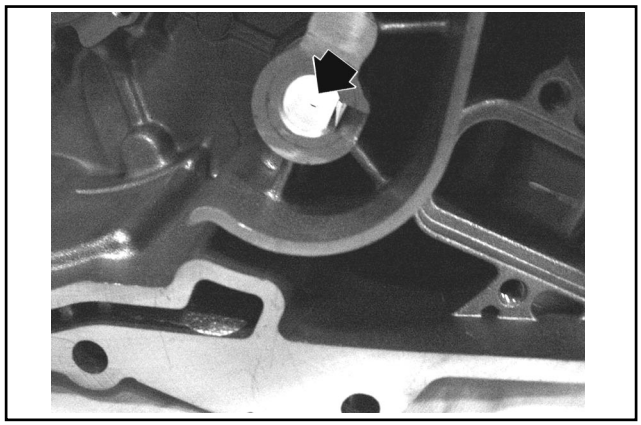

05_115

- Pump draining duct.

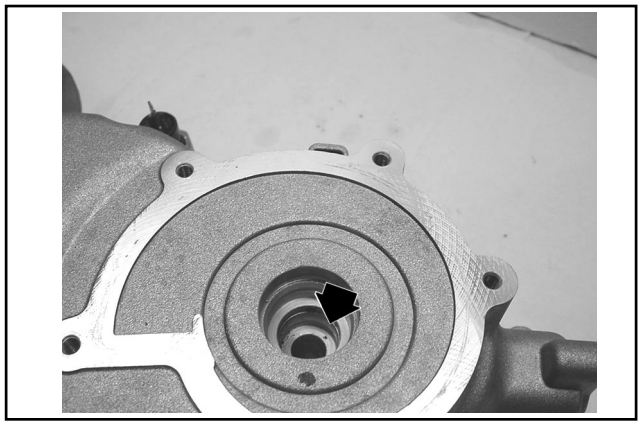

05_116

- Oil pressure sensor supply duct

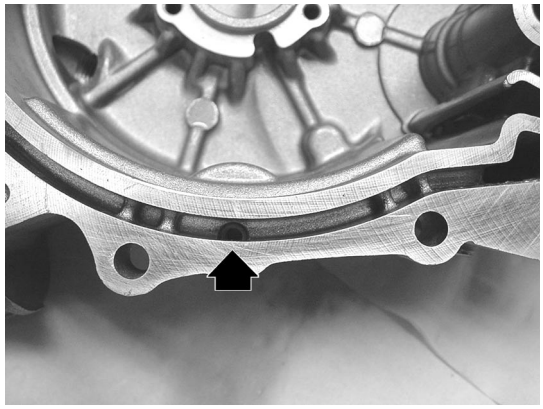

05_117

- Oil vapors decantation chamber exhaust.

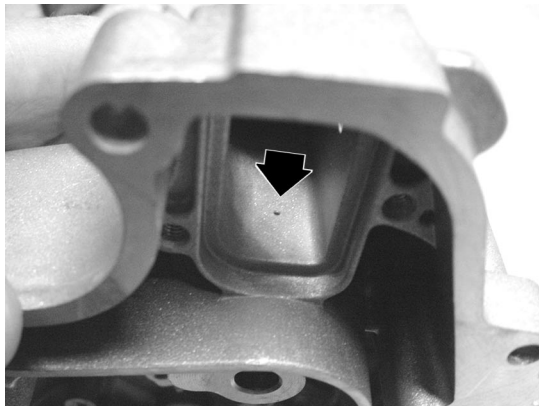

05_118

- Refit the blowby reed valve with a new seal gasket.
- Refit the support with gate and tighten the screws to the prescribed torque.

Tightening torque:
Support screws: 0.3 - 0.4 N·m

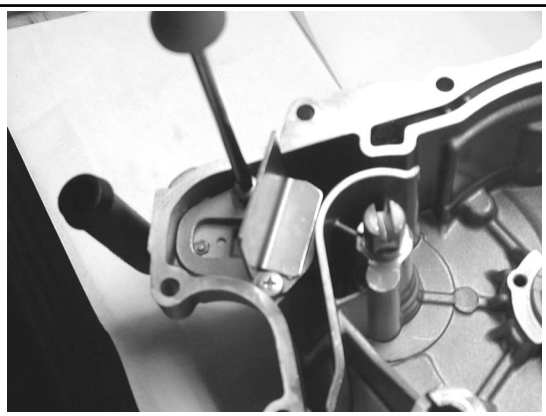

05_093

- Fit a new pump shaft O ring by means of the specific tool.
- Fit the oil minimum pressure sensor and tighten it to the presrcibed torque.

Tightening torque:
Oil minimum pressure sensor: 4 - 5 N·m

Specific tools:

Handle	**020376Y**
15 mm guide	**020412Y**

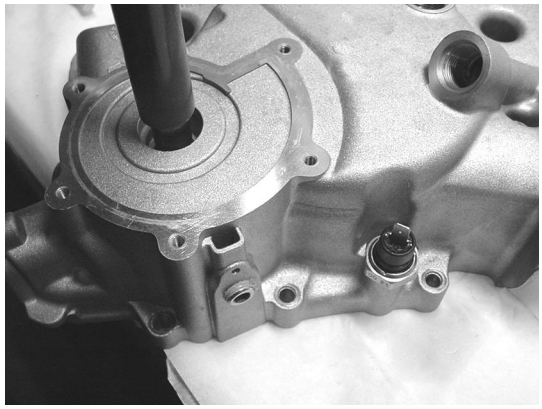

05_119

- Preassemble the ceramic seal and relevant gasket.

N.B.: The bevel must face the gasket. Take care not to dirty the ceramic ring with oil or grease in order not to compromise the seal.

05_120

- Fit the ceramic seal on the flywheel cover.

N.B.: Assemble the seal by hand to avoid damaging it.

- Fit the water pump shaft after lubricating the seat on the flywheel cover.
- Fit the mechanical seal on the shaft aligning it with the rotor stop surface.

N.B.: The depth of the final fitting depends on the rotor.

05_121

- Screw the rotor and lock it to the prescribed torque.

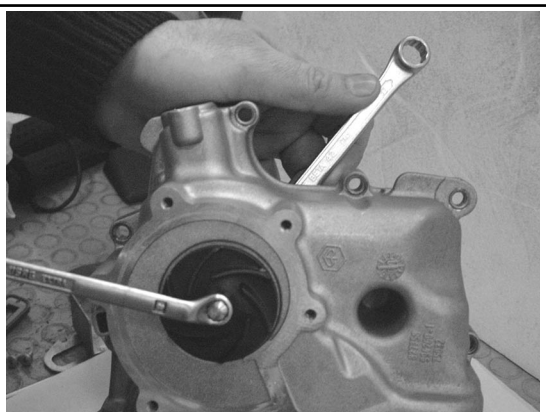

05_096

Tightening torque:
Water pump rotor: 4 - 5 N·m

Stator assembly

- Fit the stator and relevant harness. Tighten the 3 screws to the prescribed torque.

N.B.: Fit the harness rubber seal in the relevant seat on the crankcase.

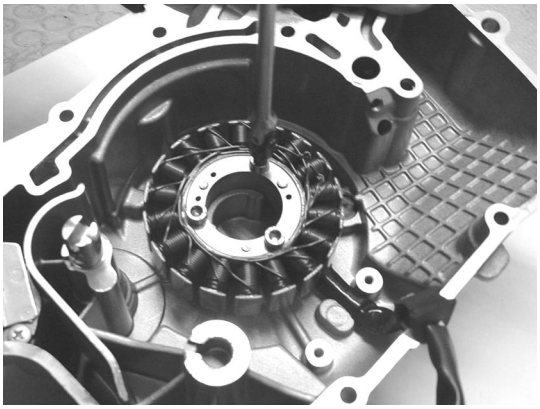

05_092

Tightening torque:
Stator fixing screws: 8 - 10 N·m

- Fit the harness guide and tighten the 2 screws to the prescribed torque.

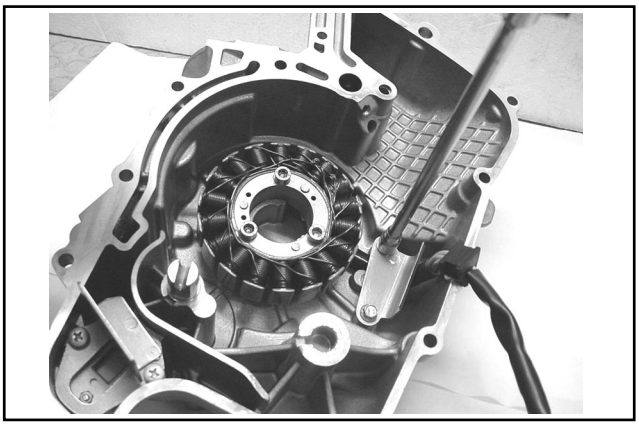

05_091

Tightening torque:
Harness guide fixing screws: 3 - 4 N·m

- Temporarily fit the valve timing control hole plug and the engine oil dipstick
- Fit the blow-by recovery duct with a new O ring.
- Tighten the screw to the prescribed torque.

05_122

Tightening torque:
Blow-by recovery duct fixing screws: 3 - 4 N·m

- Fit the spring and the bypass piston on the flywheel cover.

N.B.: Lubricate the bypass valve.

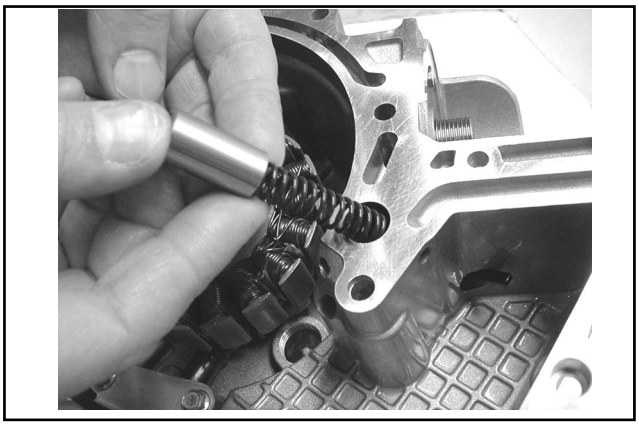

05_123

Flywheel cover assembly on the engine

- Fit a new gasket on the engine crankcase
- Make sure the 3 centering dowels are there.

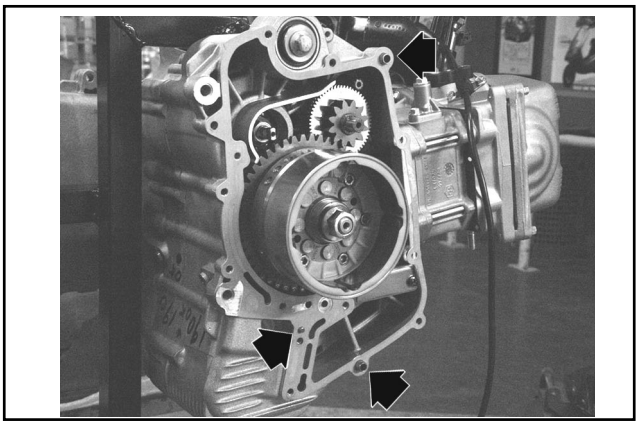

05_124

- Turn the driving shaft as to align the countershaft drive with a reference mark on the crankcase (see figure)

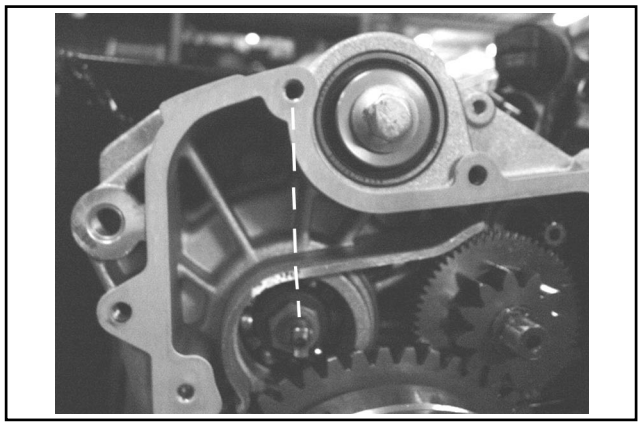

05_125

- Align the water pump shaft with the same reference on the cover.

N.B.: This is useful especially in case of interventions with the water pump cover assembled.

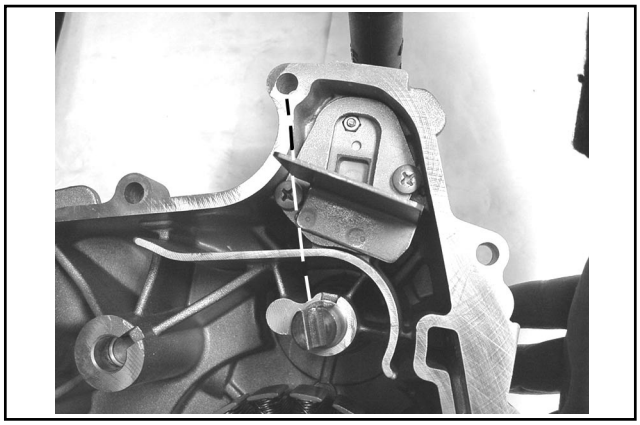

05_126

- Fit the flywheel cover on the engine. Avoid any interferences between the stator and the rotor.

Warning - Failure to observe the above procedure may cause the ceramic magnetos breaking.

- Refit the stand stop.
- Tighten the 14 fixing screws of the cover to the prescribed torque.

N.B.: The screws come supplied in three different lengths: the 5 shorter screws are located in the position shown in the figure, and the longer screw is situated under the engine oil filler plug.

Tightening torque:
Flywheel cover fixing screws: 11 - 13 N·m

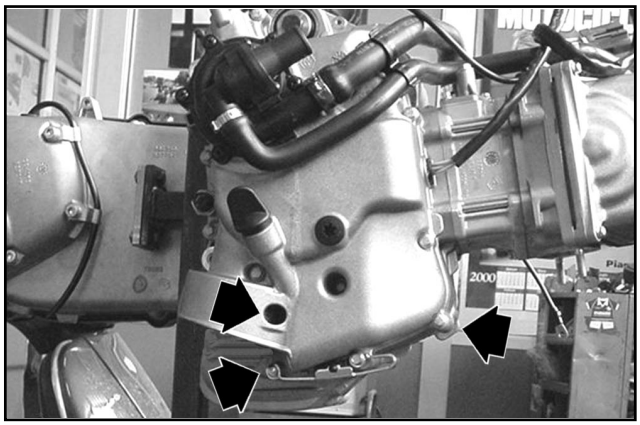

05_127

Water pump cover assembly

- Carefully fit a new O ring preventing it from coming into contact with grease or oil.

Warning - Failure to observe this procedure may cause the O ring buckling.

- Refit the water pump cover. Tighten the 6 fixing screws to the prescribed torque.

Tightening torque:
Flywheel cover fixing screws: 3 - 4 N·m

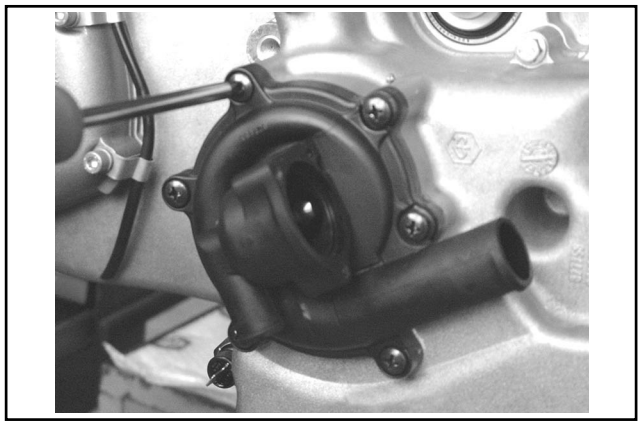

05_085

Thermostat cover assembly

- Refit the thermostat

N.B.: Check the thermostat as described in Chapter 9-Cooling. The thermostat seal provides for the sealing to the outside and for the internal sealing with the thermostat closed.

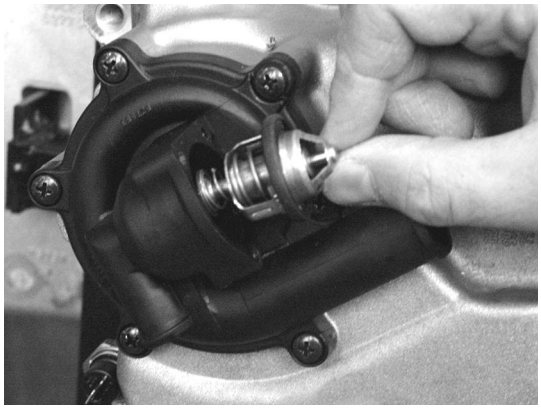

05_084

- Assemble the thermostat cover. Tighten the 3 fixing screws to the prescribed torque.

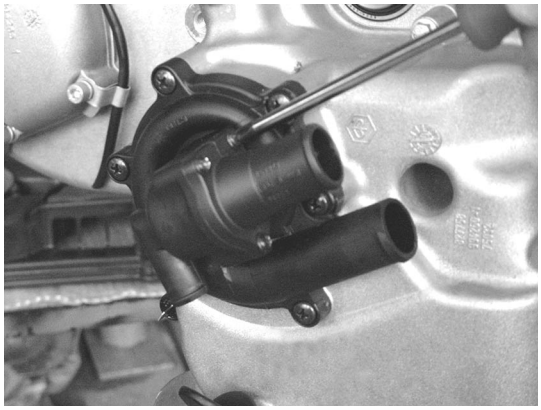

05_083

Tightening torque:
Thermostat cover fixing screws: 1.5 - 2 N·m

- Fit a new oil filter, lubricate the seal, tighten to the prescribed torque.

05_088

Tightening torque:
Oil filter: 12 - 16 N·m

- Assemble the two cooling system sleeves using 4 new clamps.
- Fit the supporting bracket. Tighten the intake manifold fixing screw to the prescribed torque.

N.B.: Lock the clamps by means of suitable pliers. Take care not to dent the tubes. Arrange for proper tightening making sure it is not insufficient.

05_081

Tightening torque:
Intake manifold screws: 11 - 13 N·m

- Reassemble the prefilter and the engine oil drain plug. Tighten it to the prescribed torque.
- Refill the engine with oil of the recommended type.

05_086

Tightening torque:
Oil drain plug: 24 - 30 N·m

Recommended oil: Selenia HI Scooter 4 Tech 5W/40

TABLE OF CONTENTS

FLYWHEEL AND STARTING SYSTEM 6

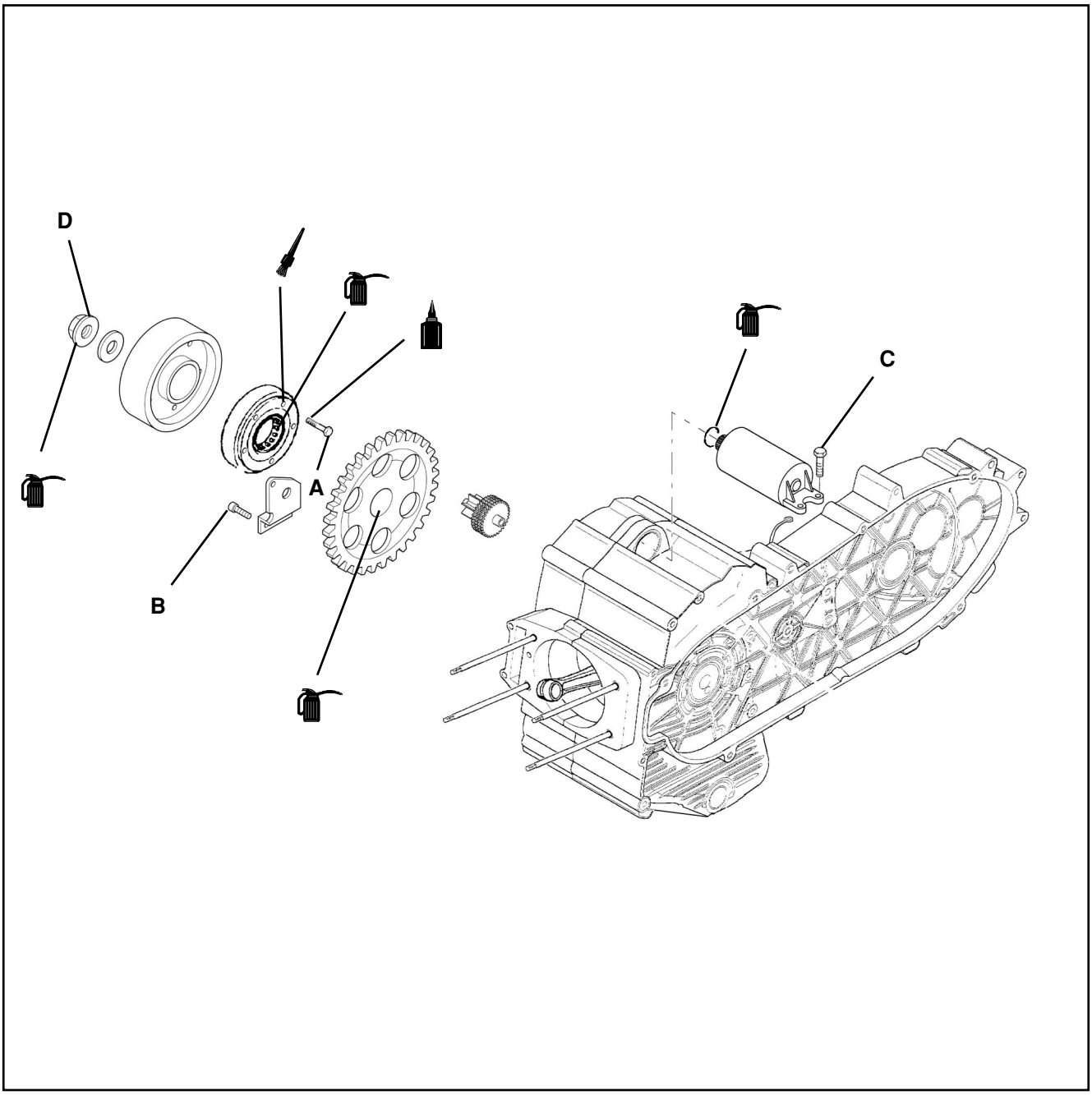

LUBRICATE WITH OIL

APPLY PRODUCT

WARNING: HANDLE WITH CARE

LUBRICATE WITH GREASE

CLEAN WITH CARE

ALWAYS REPLACE

REFERENCE	A	B	C	D	E	F	G	H	I	L	M	N	O	P	Q
QUANTITY	6	3	2	1											
TORQUE N·m	13-15	3-4	11-13	115-125											

Flywheel cover disassembly

- Remove the cooling system sleeves and the flywheel cover as described in Chapter 5-Flywheel Cover.

05_081

Starting motor disassembly

N.B.: This operation can also be performed with the flywheel cover assembled.

- Unloose the two fixing screws and remove the engine earth cable.
- Remove the starting motor assembly.

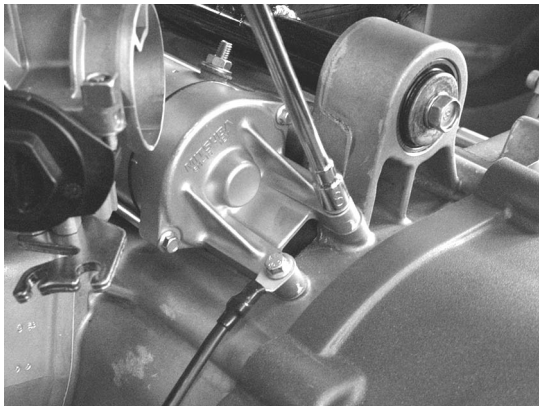

05_128

Magneto flywheel disassembly

N.B.: To disassemble the magneto flywheel, first remove the chain guide shoe stop plate

- Unloose the 3 fixing screws, remove the chain guide shoe stop plate and the starting ring gear.

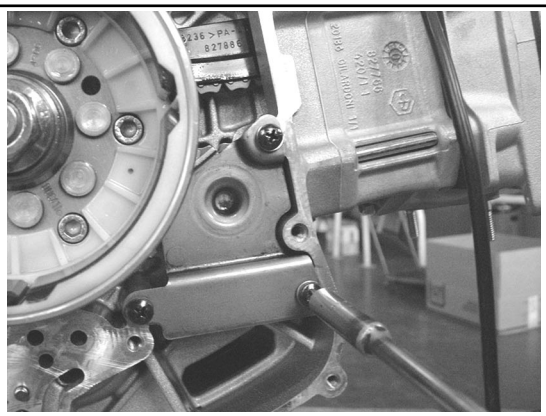

05_129

- Align the two holes on the flywheel with the housing on the crankcase to be able to fit the specific tool.

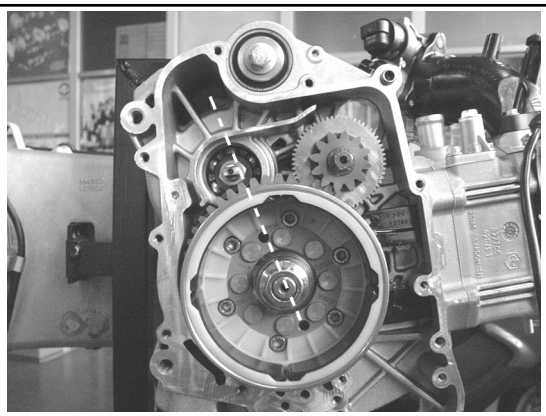

05_130

- Screw the flywheel lock tool bush on the threading intended for the extractor.

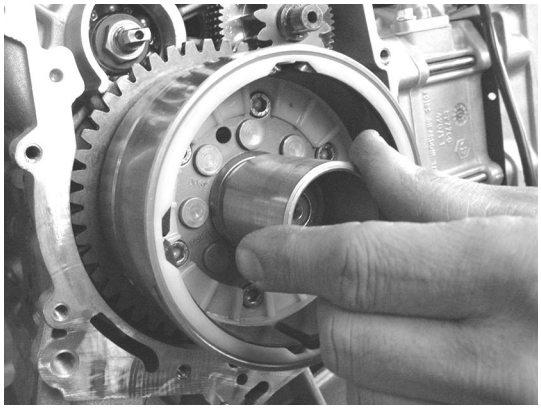

05_131

- Fully insert the specific tool as shown in the figure making sure that the pins perfectly fit in the holes previously aligned, and that it is almost in contact with the flywheel

Specific tool:
Flywheel lock tool **020472Y**

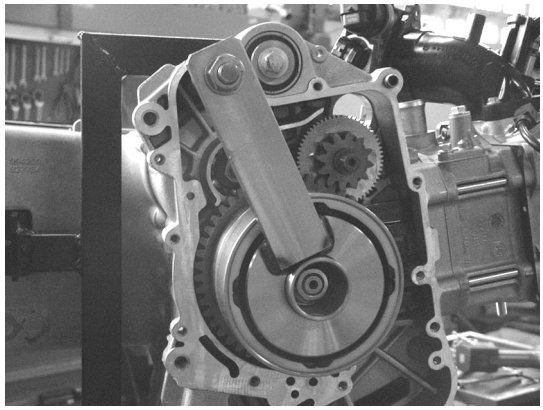

05_132

- Unloose the magneto flywheel fixing nut.
- Remove the specific tool and the fixing nut.

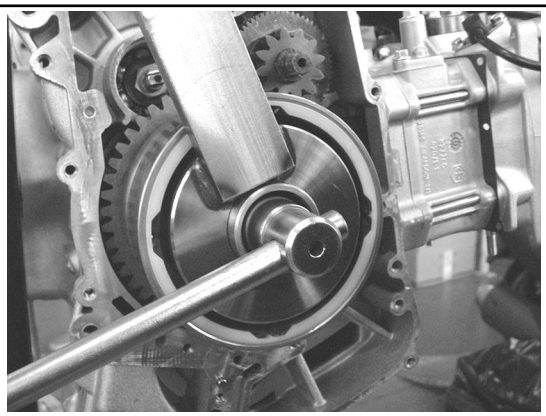

05_133

- Remove the washer.

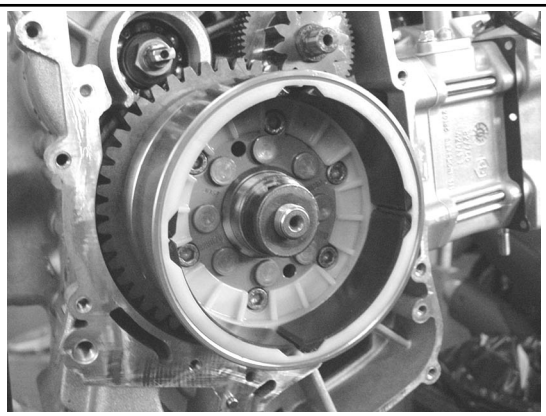

05_134

- Refit the nut as to slightly uncover the shaft and to free the space where the washer was.

Warning - This operation is necessary as the flywheel is firmly locked, hence the cone detachment could cause the rotor to fall with consequent breaking of the magnetos.

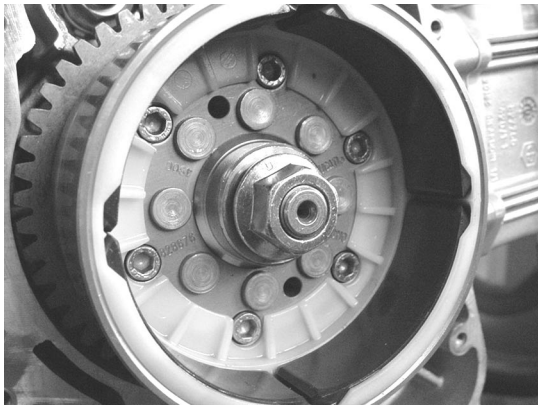

05_135

- Fit the extractor.

- Use a 27mm wrench and a 19mm bush to unlock the magneto flywheel.

Specific tool:
Flywheel extractor **020467Y**

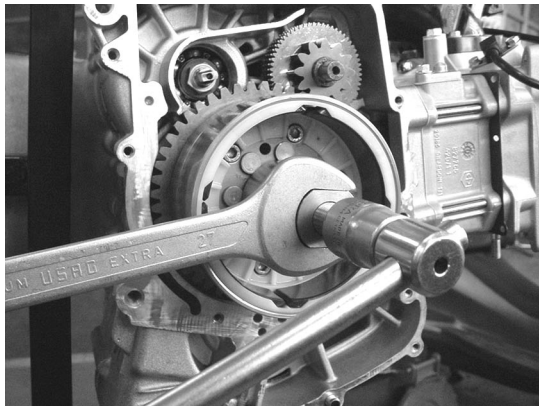

05_136

- Remove the extractor.
- Remove the nut and the magneto flywheel complete with the starting ring gear.
- Remove the key from the driving shaft.

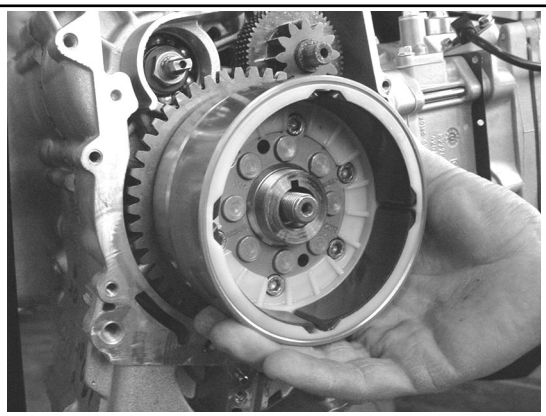

05_137

- Withdraw the starting ring gear from the free wheel by turning it clockwise.

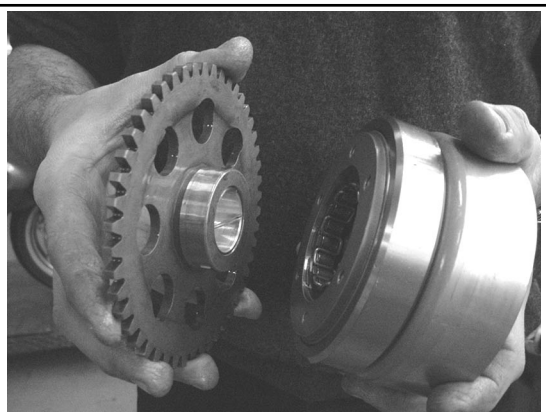

05_138

- Remove the freewheel from the magneto flywheel by unloosing the 6 fixing screws.

N.B.: To be able to disassemble the freewheel, it is recommendable to first unloose the 6 fixing screws with the flywheel still assembled on the driving shaft.

05_139

- The freewheel is precisely coupled with the flywheel; if disassembly becomes difficult, use 2 screws as holding points and as extractors.

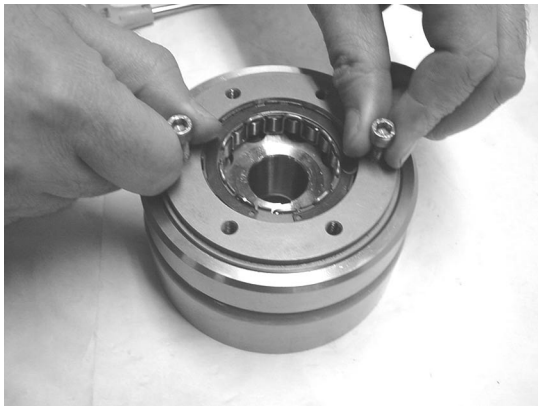

05_140

- Remove the idler gear provided with a torque limiter.

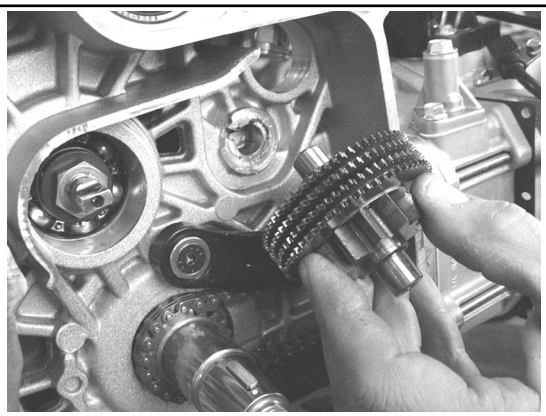

05_141

Checking the magneto flywheel components

- Check the magnetos condition.
- Check that the magneto supporting cage shows no signs of deformation or breaking.
- Check that the flywheel riveting is not loose.

05_142

Starting ring gear and freewheel

- Check that the freewheel “rollers” and the starting ring gear hub surface show no signs of anomalous wear or dents.
- Check the hub outside diameter.

Hub outside diameter: Ø 45,665 $^{+0.008}_{+0.005}$ mm

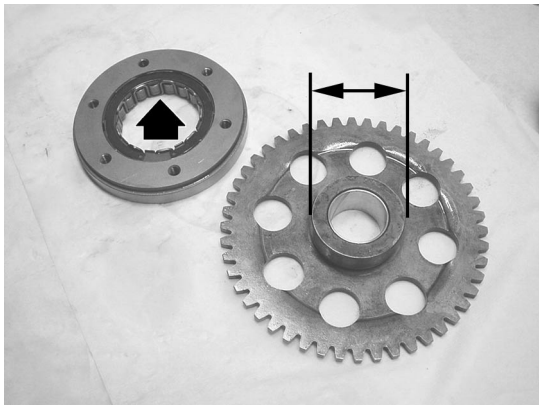

05_143

- Check the starting ring gear brass I.D.
- Check that the toothing shows no signs of wear.

N.B.: If the hub is damaged, replace the starting ring gear and the free wheel. If only the brass is damaged, it is sufficient to replace the starting ring gear assembly. In this case also check the diameter and surface of the driving shaft support. Replace the driving shaft if necessary.

Brass I.D.: Ø 27 $^{+0.020}_{+0.041}$ mm

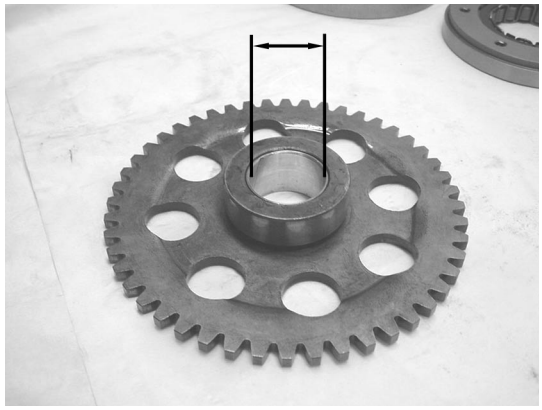

05_144

Idler gear with torque limiter

- Check the toothing out for signs of wear.
- Check the diameter of the two bearings.

Gear bearing diameter: Ø 12 $^{-0}_{-0.011}$ mm

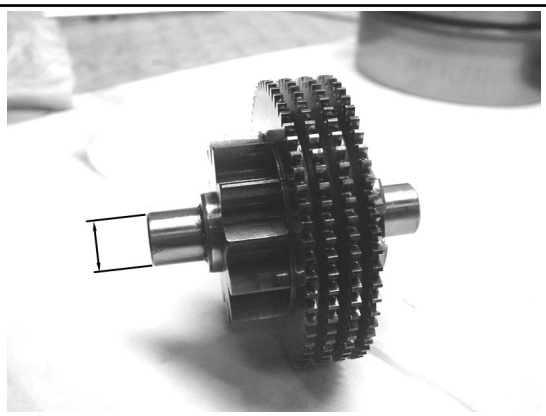

05_145

- Also check the bearings diameter on the flywheel cover and engine crankcase.

Flywheel cover bearing diameter: Ø 12 $^{+0.034}_{-0.016}$ mm
Engine crankcase bearing diameter: Ø 12 $^{+0.034}_{-0.016}$ mm

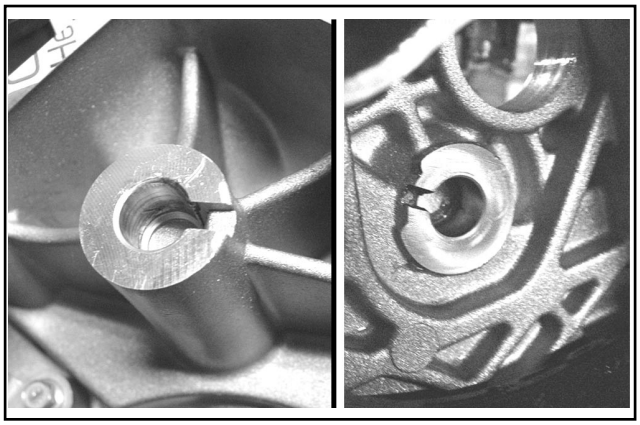

05_146

N.B.: the torque limiter is provided with 4 gears that function as clutch driving plates. The driven plates are made with 4 Belleville washers with a splined shape; this assembly allows to transmit torques below 10 kgm. In case of wrong starting operations, any counterstrokes likely to damage the engine structure are avoided by the limiter, with consequent reversal of rotation of the driving shaft.The limiter assembly cannot be overhauled. If defects are found on the toothed disks, it is recommendable to replace the assembly.

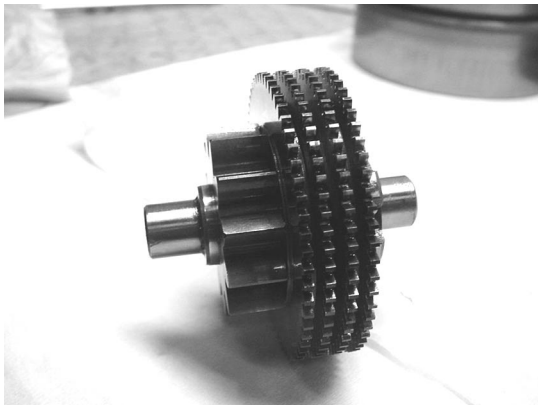

05_145_1

Freewheel assembly on magneto flywheel

- Check the freewheel contact surfaces condition.
- Carefully clean the freewheel to remove any trace of LOCTITE.
- Degrease the freewheel holes threading and the fixing screws.
- Apply LOCTITE 242 to the screw ends.

- Assemble the freewheel on the magneto flywheel making sure that the ground part is in contact with the flywheel, that is the wheel snap ring must be visible.

- Cross-tighten the 6 fixing screws to the prescribed torque.

Tightening torque:
Free wheel fixing screws: 13 - 15 N·m

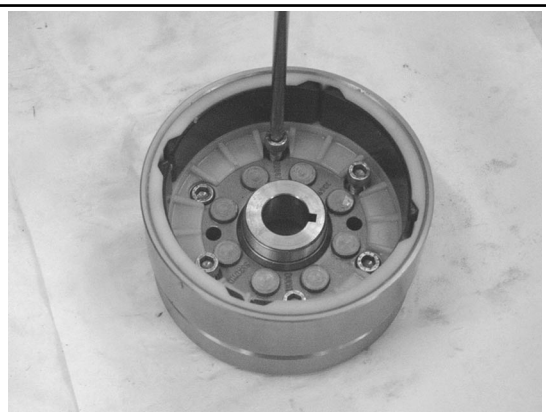

05_147

- Oil the freewheel “rollers”.

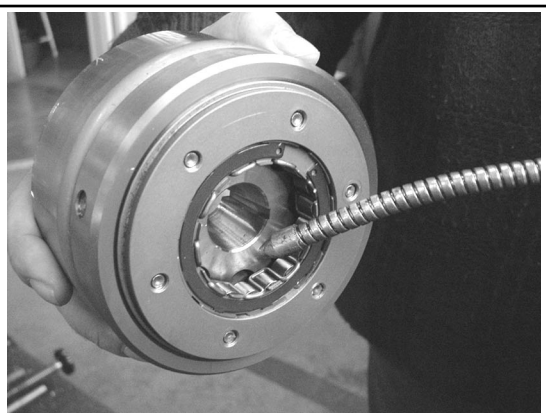

05_148

Starting ring gear assembly on magneto flywheel

- Oil the inner brass and the starting ring gear hub surface

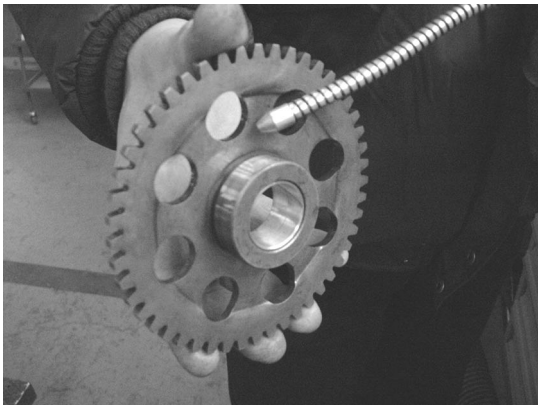

05_149

- Fit the starting ring gear on the flywheel and turn it clockwise at the same time.

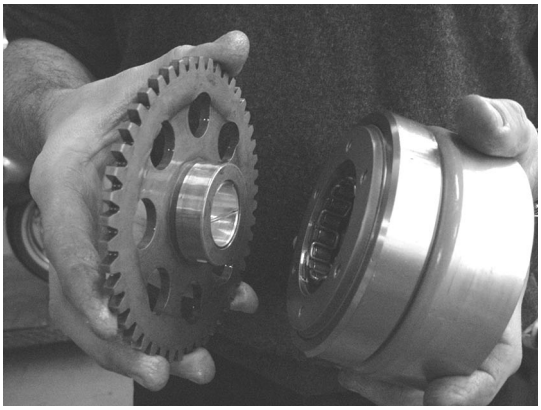

05_138

Idler gear with torque limiter assembly

- Grease the gear housing on the engine crankcase.

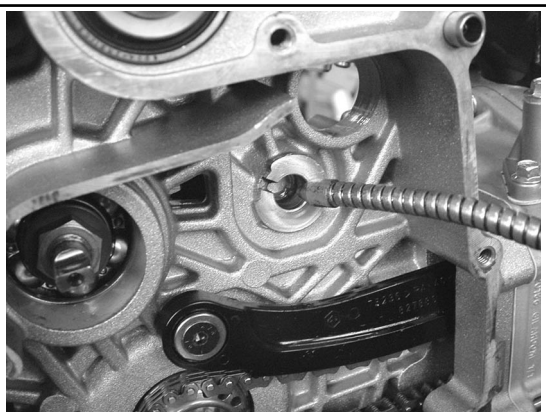

05_150

- Fit the idler gear with the torque limiter.

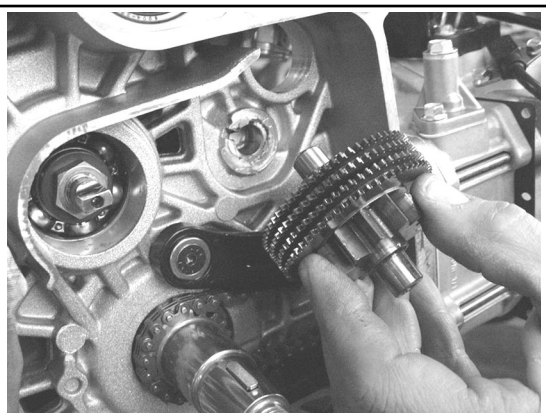

05_141

Magneto flywheel assembly on engine

- Insert the key on the driving shaft
- Assemble the magneto flywheel making sure to correctly insert the key. At the same time, mesh the torque limiter gear with the starting ring gear.

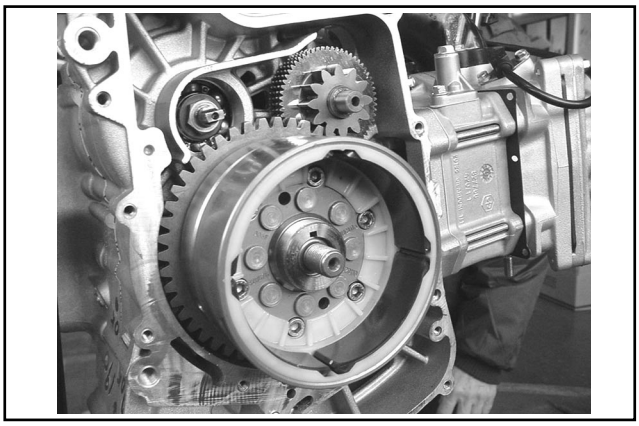

05_151

- Insert the washer and the nut on the driving shaft.

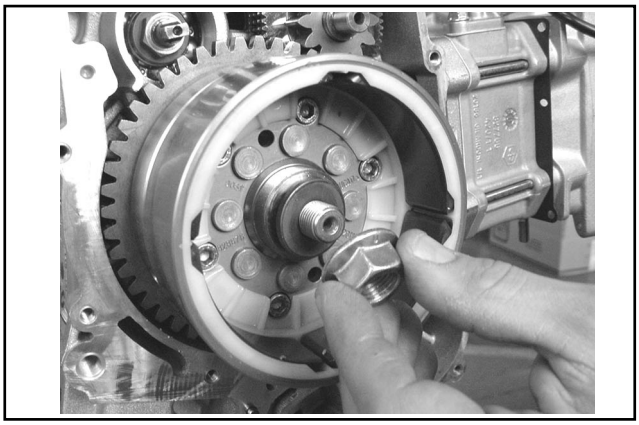

05_152

- Fully screw the flywheel lock tool guide bush, and unscrew it by 1/4 of a turn.

N.B.: Failure to observe the above procedure will cause the guide locking on the flywheel.

Specific tool:
Flywheel lock tool 020472Y

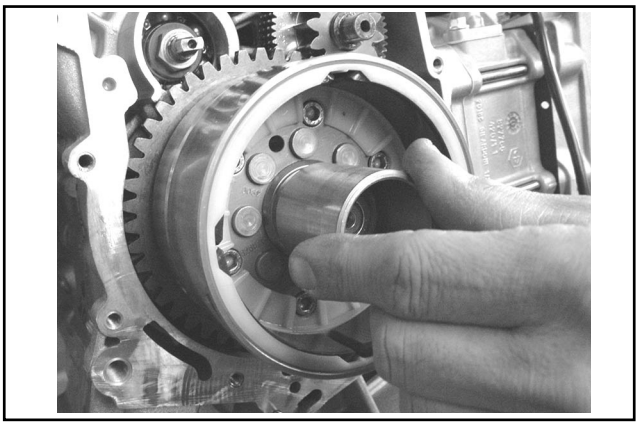

05_131

- Align the 2 magneto flywheel holes with the housing on the crankcase intended for the specific tool.

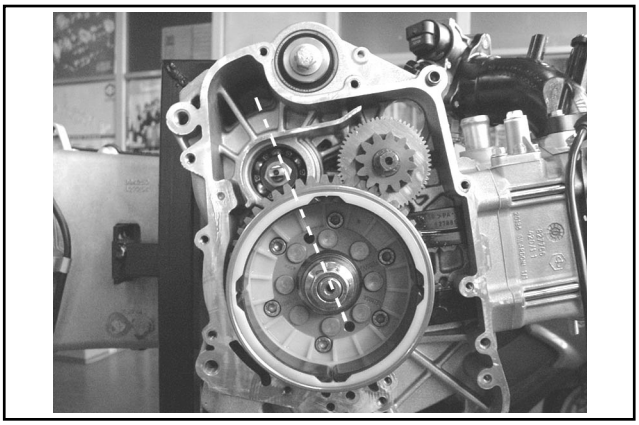

05_130

- Insert the specific tool making sure to perfectly fit the pins.

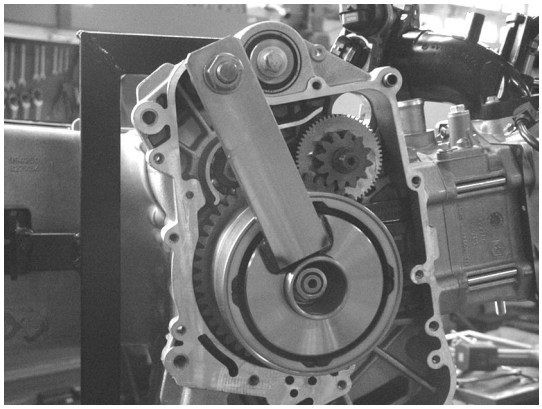

05_132

Specific tool:
Flywheel lock tool **020472Y**

- Tighten the flywheel lock nut to the prescribed torque.

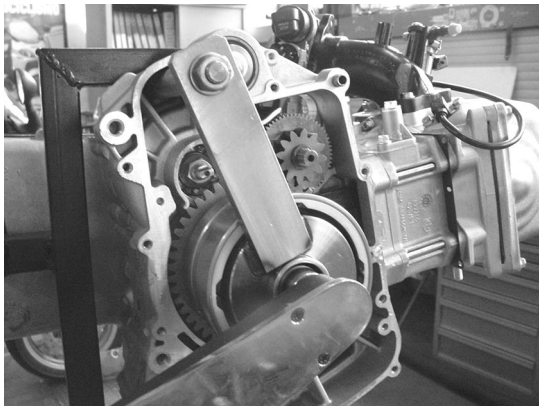

05_153

Tightening torque:
Flywheel lock nut: 115 - 120 N·m

- Assemble the chain guide shoe stop plate and tighten the 3 screws to the prescribed torque.

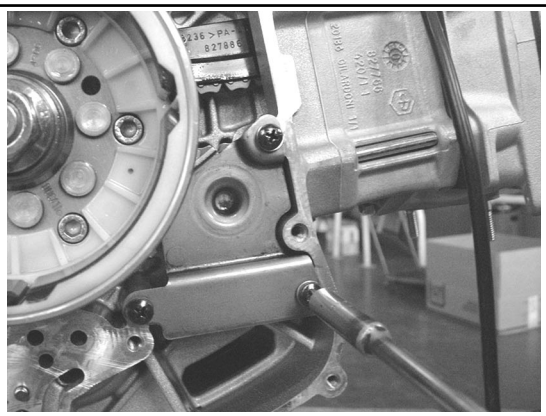

05_129

Tightening torque:
Chain guide shoe plate fixing screws: 3 - 4 N·m

Starting motor assembly

- Check the O ring condition and oil it.
- Fit the starting motor.
- Fix the earth cable.
- Tighten the 2 fixing screws to the prescribed torque.

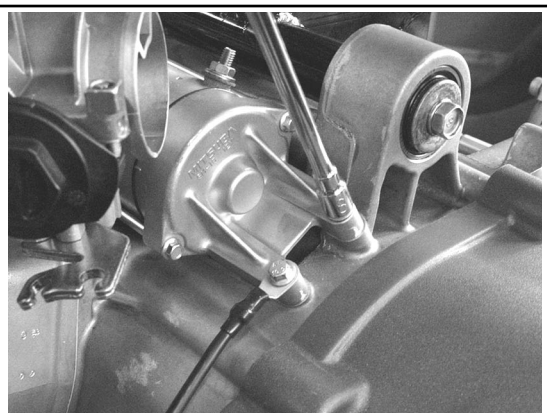

05_128

Tightening torque:
Starting motor fixing screws: 11 - 13 N·m

Flywheel cover assembly

- Grease the housing of the idler gear with torque limiter, located on the flywheel cover.
- Align the water pump drive with a reference mark and fit the flywheel cover as described in Chapter 5-Flywheel cover.

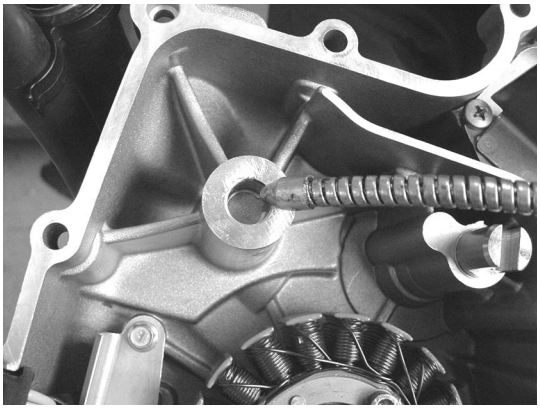

05_154

TABLE OF CONTENTS

THERMAL UNIT AND TIMING SYSTEM 7

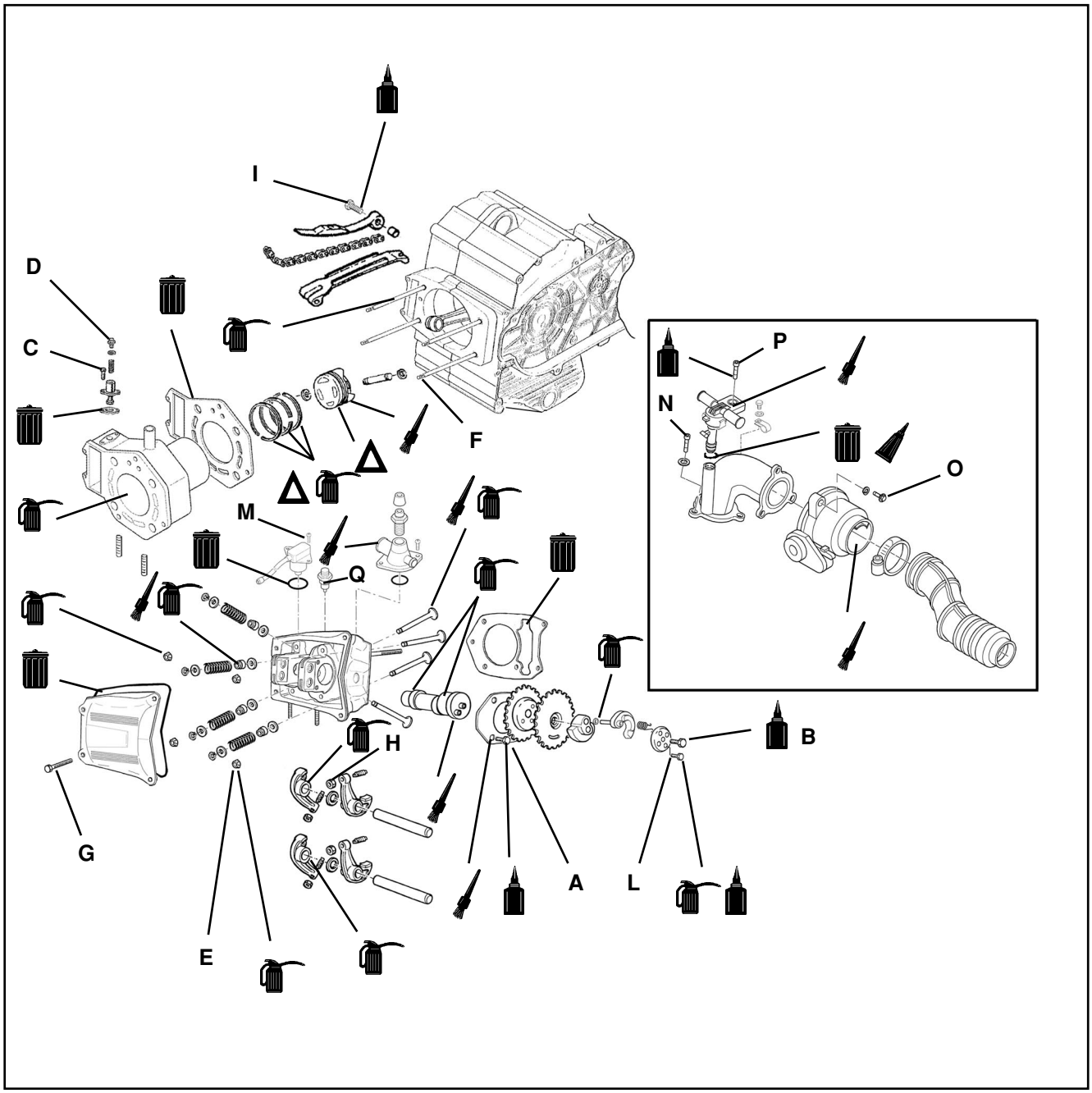

LUBRICATE WITH OIL

APPLY PRODUCT

WARNING: HANDLE WITH CARE

LUBRICATE WITH GREASE

CLEAN WITH CARE

ALWAYS REPLACE

REFERENCE	A	B	C	D	E	F	G	H	I	L	M	N	O	P	Q
QUANTITY	3	1	2	1	4	4	4	4	1	1	2	3	3	1	1
TORQUE N·m	4-6	30-35	11-13	5-6	38-42	44-46	11-13	6-8	10-14	7-8,5	3-4	11-13	11-13	3-4	10-12

- Remove the external transmission cover and the transmission cover complete with net filter, as described in Chapter 3-Automatic Transmission.

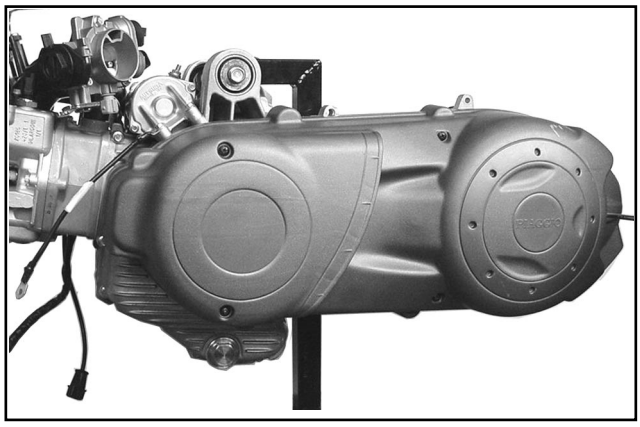

05_006

- Remove the flywheel cover, the flywheel and the idler gear with torque limiter as described in Chapter 5-Flywheel Cover, and in Chapter 6-Flywheel and Starting system.

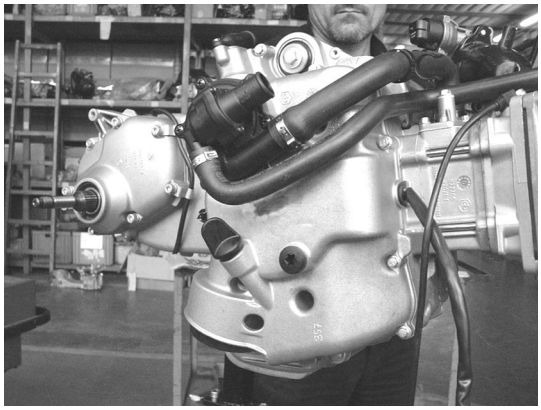

05_155_1

Intake manifold disassembly

- Unloose the 3 fixing screws, one of which locks the supporting bracket of the cooling bypass tube previously removed.
- Remove the intake manifold assembly.

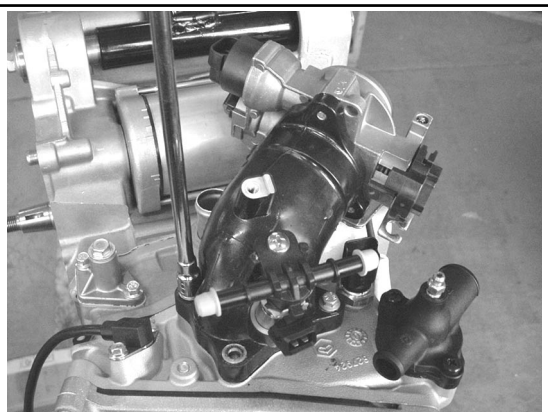

05_155

Tappet cover disassembly

- Unloose the 4 fixing screws and remove the tappet cover with relevant gasket.

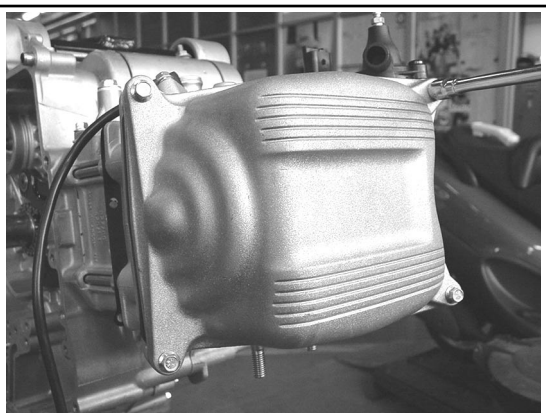

05_156

Valve gear disassembly

- Turn the engine until the intake valves close, that is the reference mark on the phonic wheel must be moved upwards as shown in the figure.

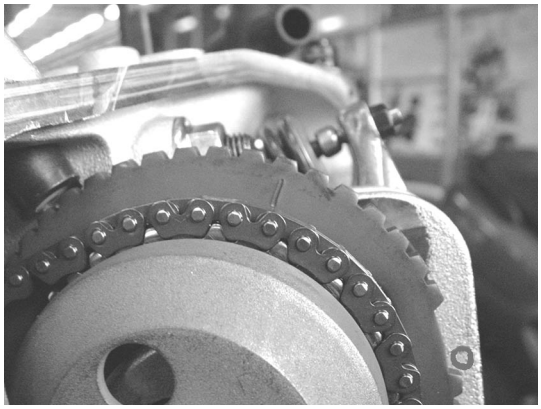

05_157

- Remove the central screw and the valve lifter weight stop bell by means of the specific tool.

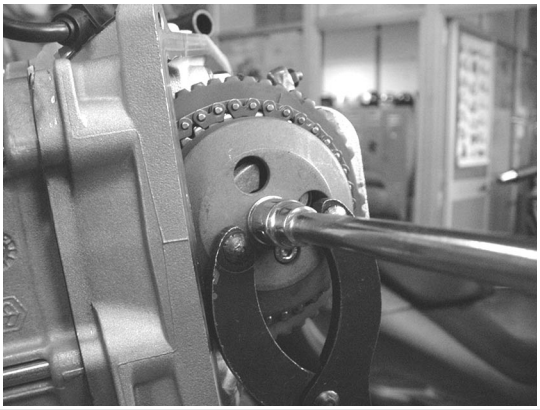

05_158

Specific tool:
Compass wrench **020565Y**

- Remove the return spring and the valve lifter weight with the relevant stop washer.

N.B.: Make sure the spring and the washer do not drop in the engine through the chain compartment.

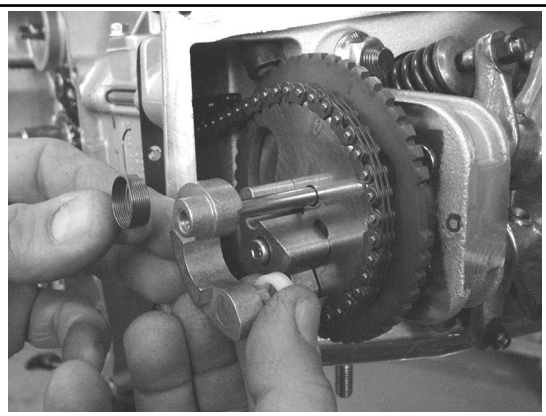

05_159

- Align the reference marks on the phonic wheel and on the head.

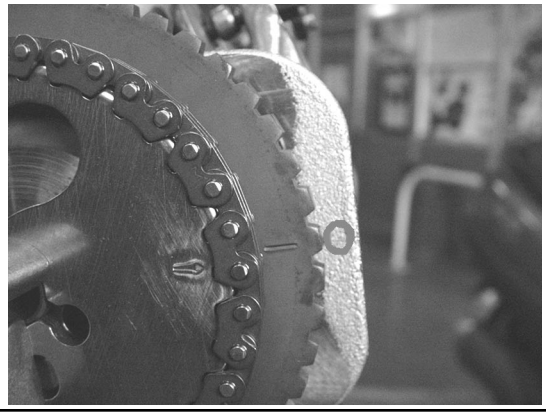

05_160

- Unloose the tightener central screw.
- Unloose the 2 fixing screws and remove the tightener and relevant gasket.

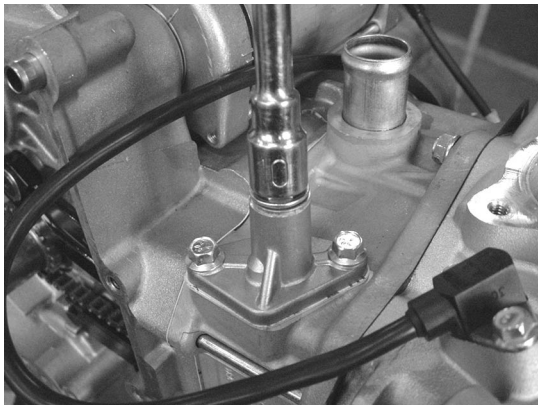

05_161

- Remove the internal hexagonal-head screw and the counterweight, as shown in the figure.

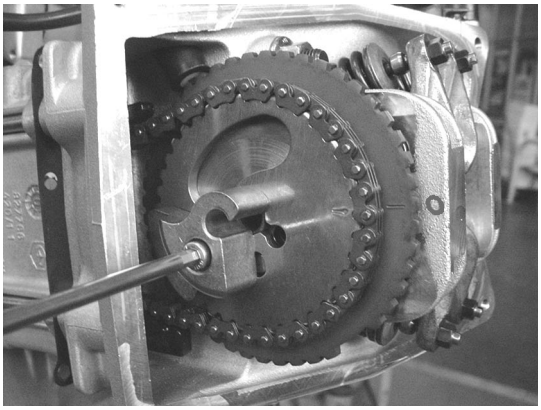

05_162

- Remove the timing chain gear from the camshaft
- Remove the timing chain gear.

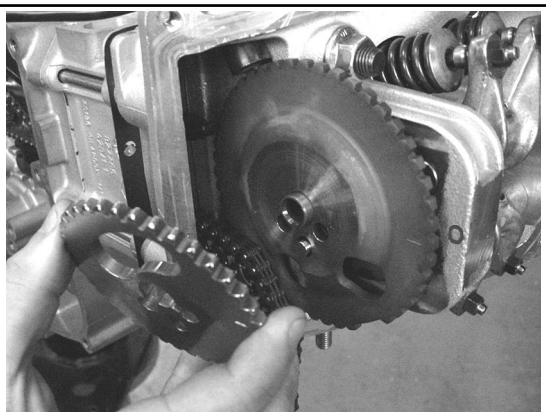

05_163

- Remove the phonic wheel.

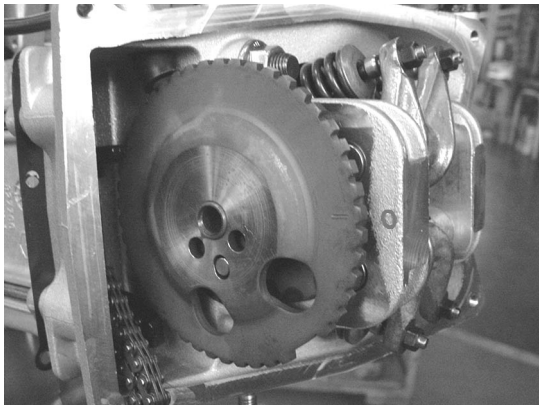

05_164

- Remove the engine revs-stroke sensor and relevant O ring by unloosing the two fixing screws.

N.B.: Check this component as described in Chapter 9-Injection.

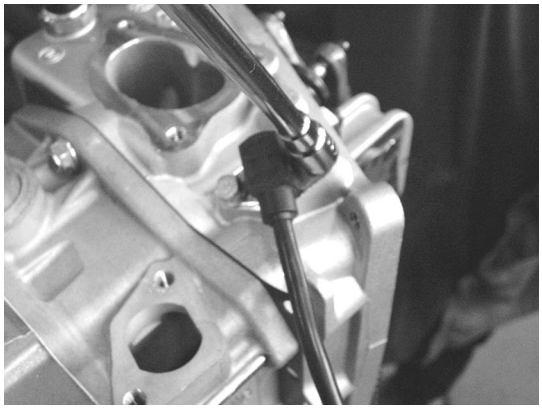

05_165

Camshaft and equalizers disassembly

- Unloose the 3 fixing screws and remove the camshaft stop bracket.

N.B.: Removing the fixing screws may turn out to be difficult. Make sure not to damage the internal hexagon. If necessary, first unglue the threading.

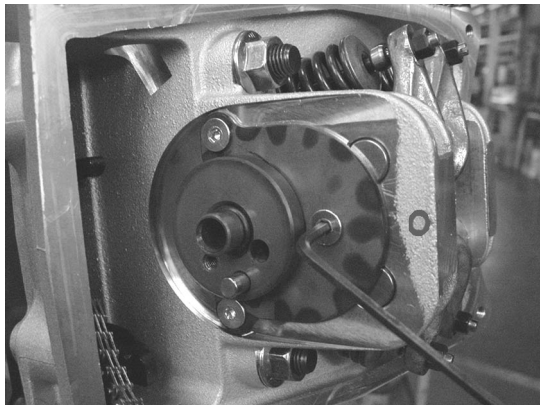

05_166

- Remove the camshaft.

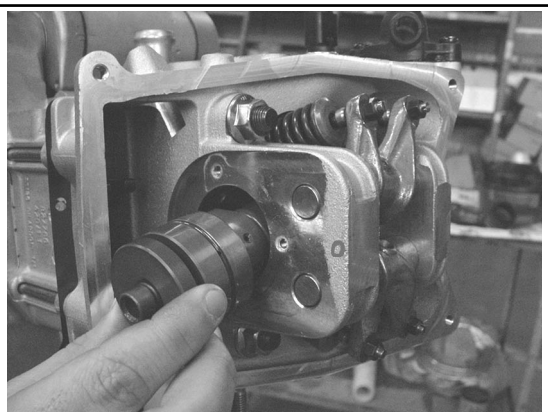

05_167

- Remove the pins and equalizers by acting through the holes, transmission side.

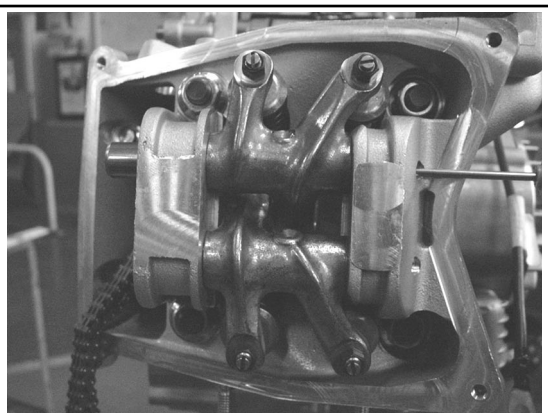

05_168

Head disassembly

- Remove the spark plug.
- Remove the cooling system outlet union and relevant O ring by unloosing the 2 screws.

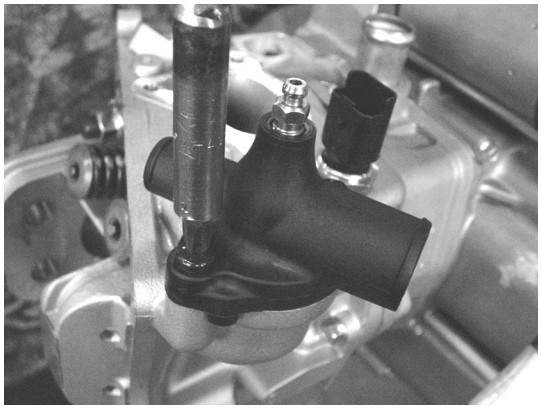

05_170

- Remove the coolant temperature sensor.

N.B.: The sensor controls both the injection and the analogue instrument on the dashboard. Check this component according to the procedure described in Chapter 9-Injection.

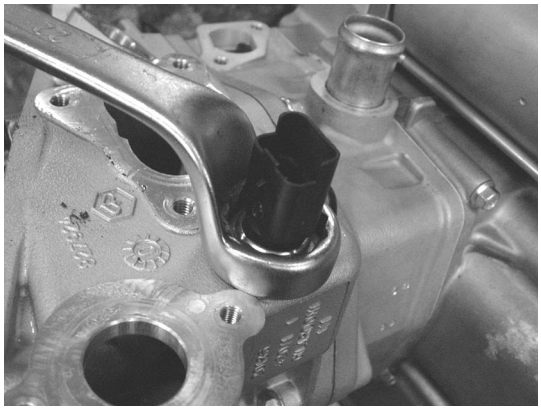

05_171

- Remove the 2 fixing nuts on the head, exhaust and intake side.

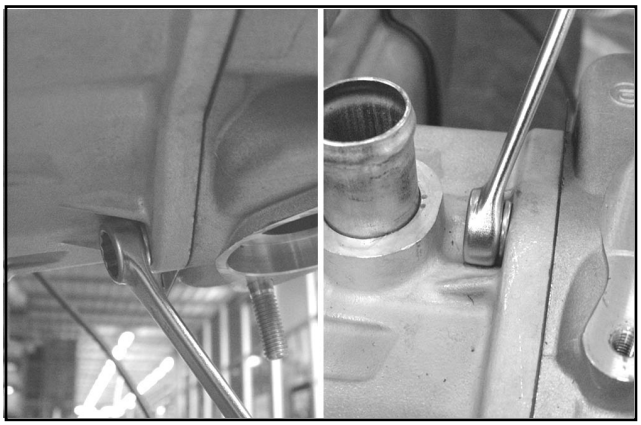

05_172

- Remove the 3 side fixings shown in the figure.

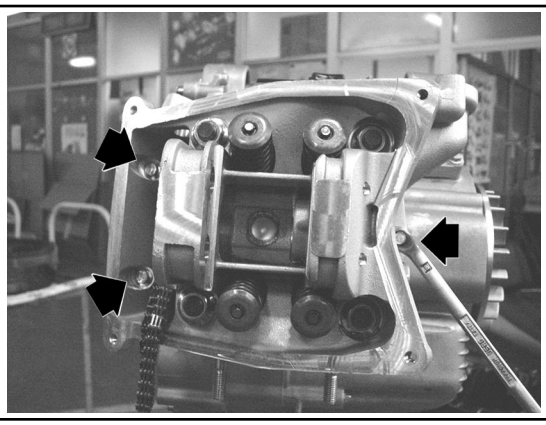

05_173

N.B.: If necessary, the head can be removed together with the camshaft, equalizer pins and fixing bracket.

- Unloose the 4 head to cylinder fixing nuts in 2-3 times in a crossed sequence.
- Remove the head, the 2 centering dowels, the gasket and the lower chain guide shoe.

N.B.: Avoid removing the dowels if they are forced in a housing.

Warning - Collect the thermal unit coolant in a suitable container when the head is disassembled

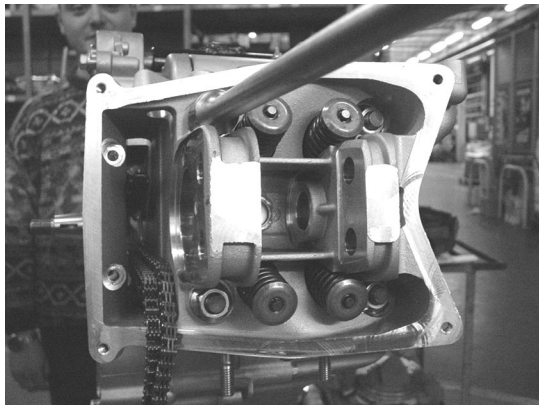

05_174

Valves disassembly

- Disassemble the cotters, caps, springs and valves by means of the specific tool provided with an adapter.

Specific tool:

Valves disassembly tool	**020382Y**
Adapter	**020382Y012**

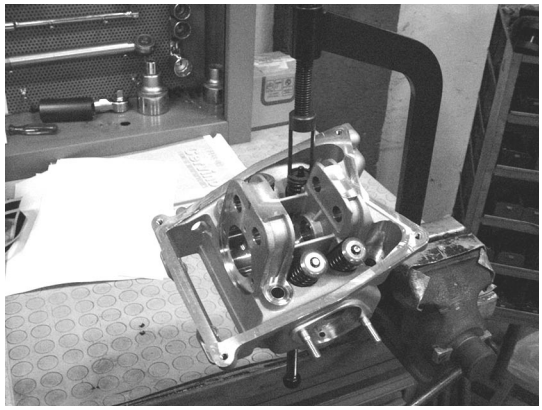

05_175

Warning - Put the valves away in such a way as to easily recognize their original position on the head (flywheel side and transmission side)

- Remove the oil seals by means of the specific tool

Specific tool:

Oil seal extractor	**020431Y**

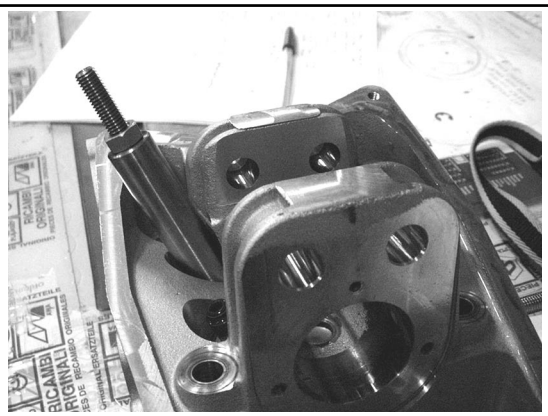

05_176

- Remove the spring supports

N.B.: Blow compressed air in the housings to facilitate the spring supports removal.

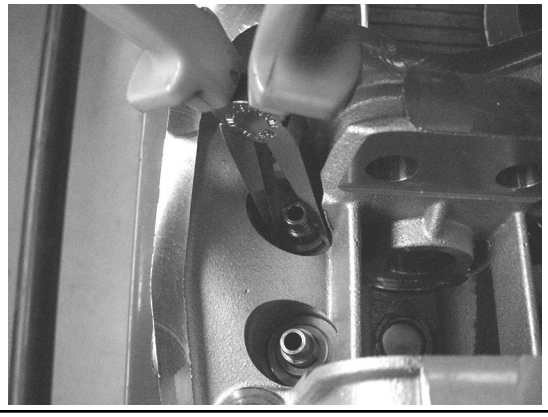

05_177

Cylinder and piston disassembly

- Remove the timing chain.
- Unloose the fixing screw and remove the spacer and the tightener pad.

N.B.: It is recommendable to mark the chain in order to refit it in the original direction of rotation.

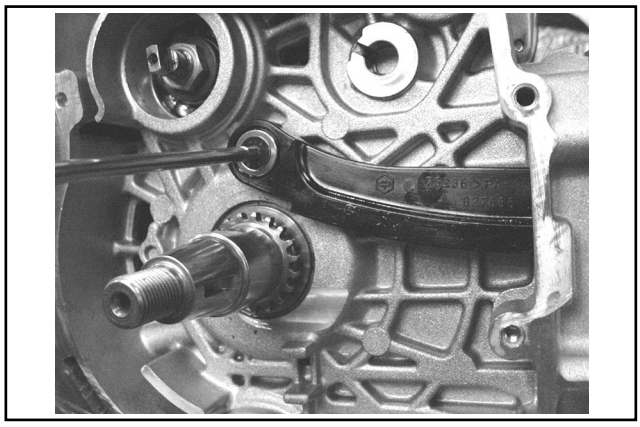

05_178

- Remove the cylinder and relevant gasket, and the centering dowel.

N.B.: The second centering is made possible thanks to a pin fitted in the cylinder.

Warning - To avoid damaging the piston, hold it while disassembling the cylinder.

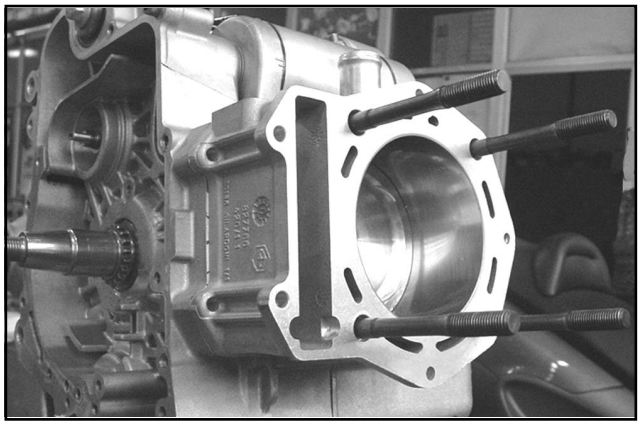

05_179

- Remove the 2 stop rings of the piston gudgeon pin through the specific openings.
- Remove the gudgeon pin and the piston.

N.B.: Close the cylinder housing opening on the crankcase with paper or a cloth, to prevent one of the two stop rings from falling inside.

05_180

- Remove the compression rings and the scraper ring.

Warning - Mark the compression rings assembly position to avoid inverting them if they are re-used.

N.B.: Take care not to damage the rings during the disassembly procedure.

05_181

Checking connecting rod small end

- Measure the connecting rod small end diameter by means of a reamer.

Standard diameter: $22^{+0.025}_{+0.015}$ mm

N.B.: If the connecting rod small end diameter exceeds the standard value, if it shows signs of wear or overheating, replace the driving shaft as described in Chapter 8-Crankcase and Driving Shaft.

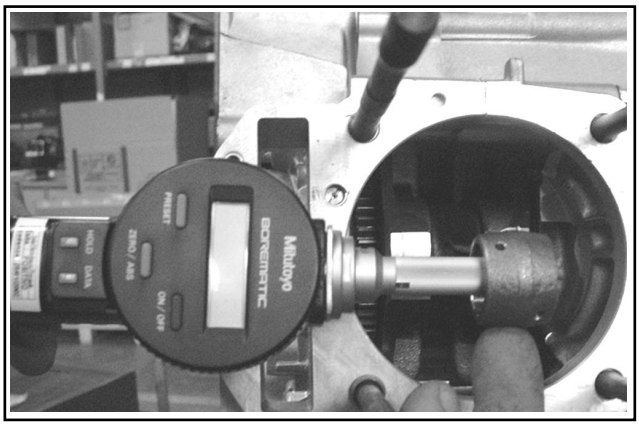

05_182

Gudgeon pin diameter

- Check the gudgeon pin outside diameter by means of a micrometer.

Standard diameter: $22^{0}_{-0.004}$ mm

- Calculate the connecting rod small end - gudgeon pin allowance

Standard clearance: 0.015 - 0.029 mm

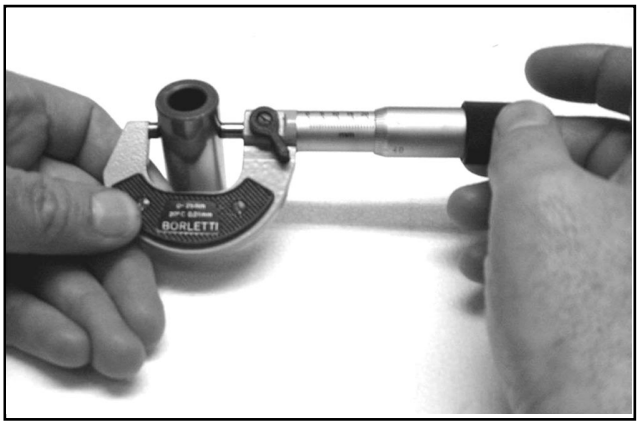

05_183

- Measure the piston support diameter

Standard diameter: $22^{+0.006}_{+0.001}$ mm

- Calculate the gudgeon pin - piston allowance.

Standard clearance: 0.001 - 0.010 mm

N.B.: The gudgeon pin housings are provided with 2 lubrication ducts. Therefore the diameter must be measured according to the piston axis

05_184

- Measure the piston outside diameter orthogonally to the gudgeon pin axis.
- Perform the measurement as shown in the figure: A = 43.2 mm

Piston diameter: 92 mm

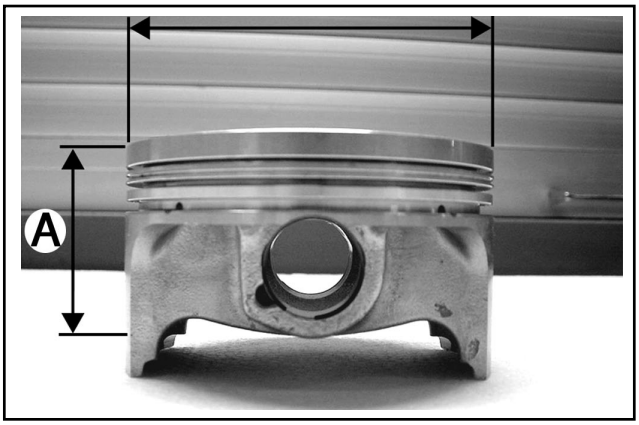

05_185

- Measure the cylinder inside diameter by means of a reamer in the directions shown in the figure and at three different heights.
  Standard diameter: $92^{+0.018}_{+0.010}$ mm

- Make sure that the lining is not exfoliated.
- Check that the head coupling surface shows no signs of wear or deformation.

  Maximum allowed runout: 0,05 mm

- The pistons and cylinders are classified according to their diameter. The coupling is made under the same conditions (A-A, B-B, C-C, D-D).

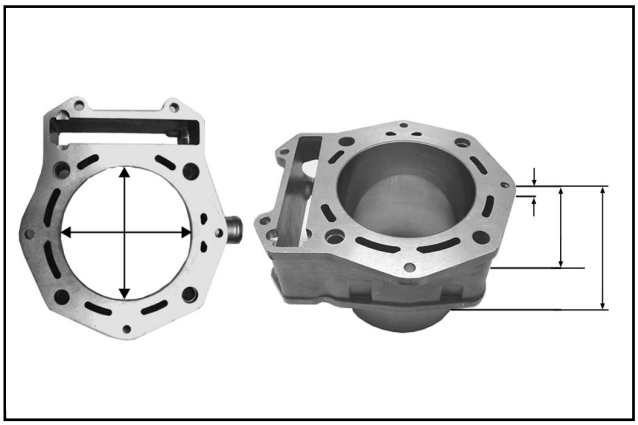

05_186

Piston

- Carefully clean the gas ring slots.
- With suitable feelers, measure the allowance between the gas rings and piston slots as shown in the figure.
- If values higher than those indicated in the table are measured, replace the piston.

N.B.: Measure the play by inserting the feeler gauge blade on the 2nd gas ring side.

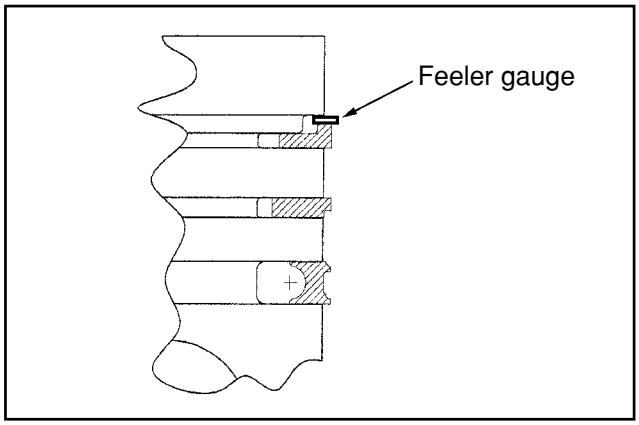

05_187

	Standard allowance	Maximum allowance allowed after use
1st compression ring	$A=0.9^{-0.005}_{-0.030}$ mm $B=1.5^{-0.005}_{-0.03}$ mm	$C=0.9^{+0.03}_{+0.01}$ mm $D=2^{+0.05}_{-0.02}$ mm
2nd compression ring	$12^{-0.005}$ mm	$1.25^{+0.03}$ mm
Scraper ring	$2.5^{-0.005}$ mm	$2.5^{+0.03}$ mm

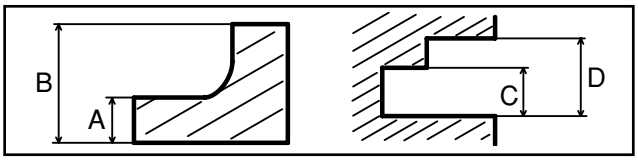

05_187_1

Gas rings

- Insert alternately the 3 gas rings in the cylinder, in the area of its original diameter. Insert the rings orthogonally to the cylinder axis using the piston to such purpose.
- Measure the gas rings opening (see figure) by means of a feeler gauge.
- If values higher than those prescribed are measured, replace the rings.

05_188

	Standard opening	Max value
Compression ring	0.15 - 0.35 mm	0.5 mm
Scraper ring	0.25 - 0.50 mm	0.65 mm
Scraper ring	0.25 - 0.50 mm	0.65 mm

N.B.: Before replacing the rings, make sure that the instructions regarding the ring-slot and piston-cylinder allowances have been followed. However, the bedding of new rings on secondhand cylinders may differ from the standard bedding conditions.

Piston assembly

- Assemble the piston and the gudgeon pin on the connecting rod. Position the piston with the arrow facing the exhaust.

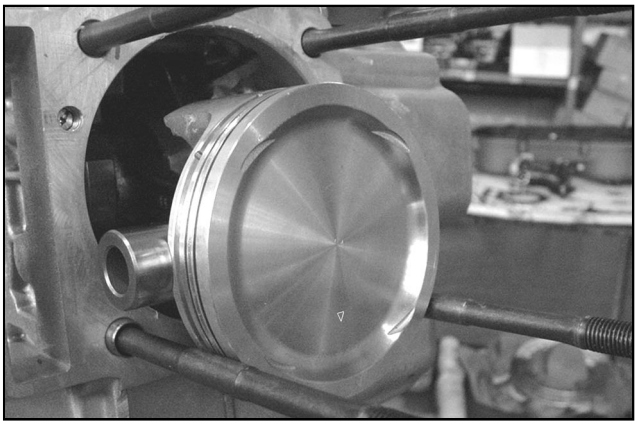

05_189

- Insert the gudgeon pin stop ring in the specific tool, with the opening in the position marked on the tool.
  S = left
  D = right

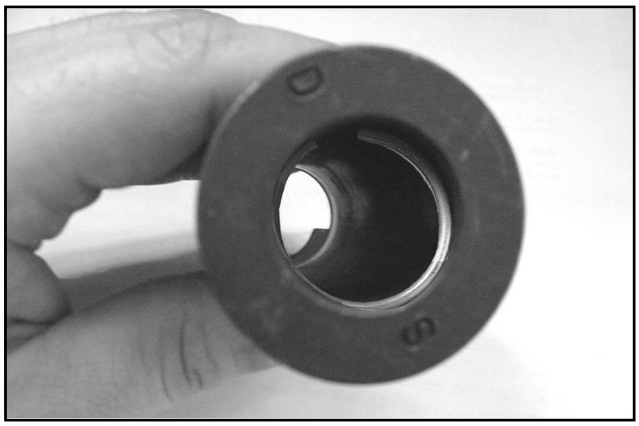

05_190

- Fit the stop ring by means of the punch

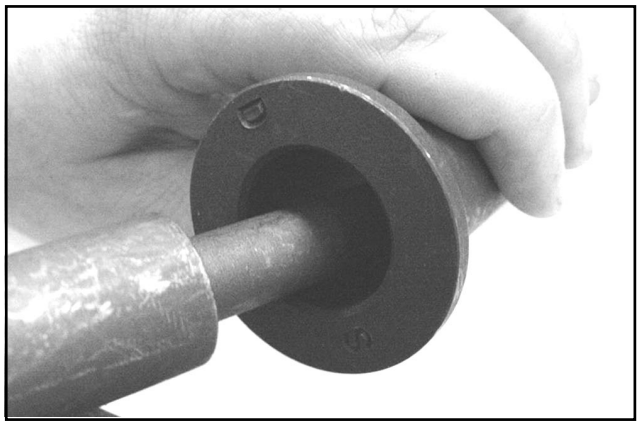

05_191

- Assemble the gudgeon pin lock using the pin, as shown in the figure.

Specific tool:
Tool for gudgeon pin lock assembly 020470Y

N.B.: The stop rings assembly tool must be used by hand.

Warning - Using a hammer may damage the locks housing.

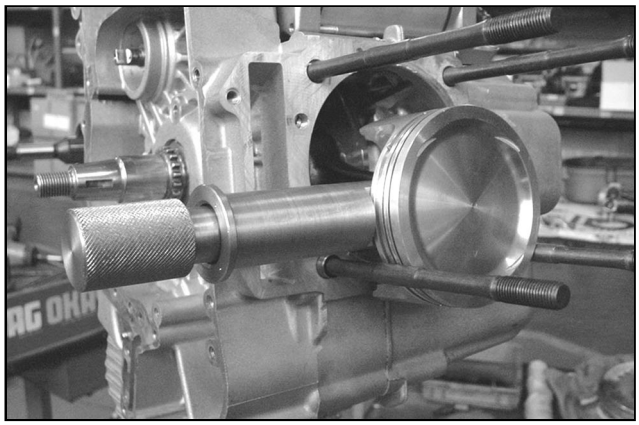

05_192

Cylinder gasket selection

- Temporarily assemble the cylinder on the piston without its gasket.
- Fit a dial gauge on the specific tool using the short connection, as shown in the figure.

Specific tool:
Stand for piston position check 020475Y

- Set the dial gauge to zero with a preload of a few millimeters by means of a surface plate,
- Fix the dial gauge.
- Check that the feeler pin is sliding perfectly.
- Assemble the tool on the cylinder without changing the dial gauge position.
- Lock the tool using the head fixing original nuts.

- Move the driving shaft up to the TDC (dial gauge reversal of rotation point).
- Measure the deviation from the zero setting value.
- Consult the table below to find the thickness of the cylinder gasket to be used for reassembly. Identifying the right cylinder gasket thickness will allow to maintain the right compression ratio.
- Remove the specific tool and the cylinder.

N.B.: If the deviation (projection or recess) is near to the change of class, repeat the measurement on the opposite side. Reassemble the tool by inverting its position.

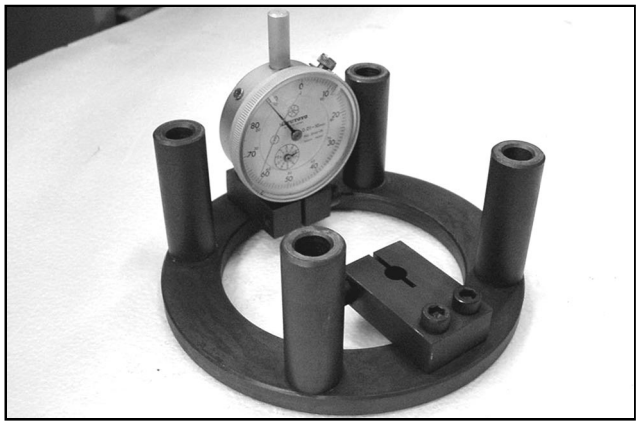

05_193

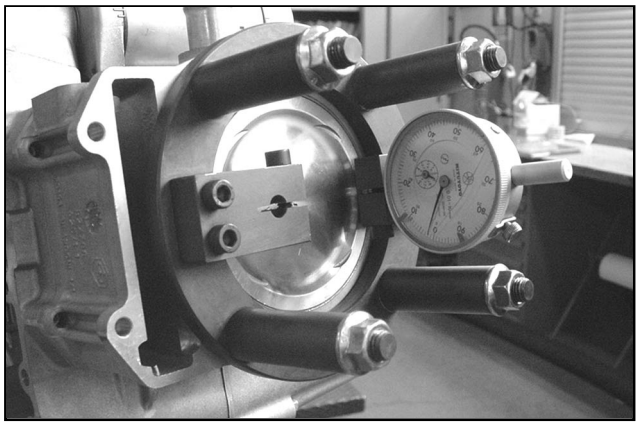

05_194

Measured recess / projection	Gasket thickness
- 0.185 - - 0.10	0.4 ± 0.05
- 0.10 - + 0.10	0.6 ± 0.05
+ 0.10 - + 0.185	0.8 ± 0.05

Compression rings assembly

- Put the scraper ring spring on the piston.
- Assemble the scraper ring by keeping the opening opposite to the spring joint and with the top writing facing the piston crown. The chamfer must always be positioned towards the piston crown.
- Assemble the second ring with the identification letter or the top writing facing the piston crown. The step must always face the opposite side of the piston crown.
- Assemble the first compression ring respecting the direction of its housing.
- We suggest a suitable tool be used to fit the rings.

N.B.: The point of contact of the 2 sealing rings with the cylinder has a conical shape allowing for a better bedding.

- Offset the ring openings by 120° as shown in the figure.
- Lubricate the parts with engine oil.
- The engine requires the 1st compression ring with L section.

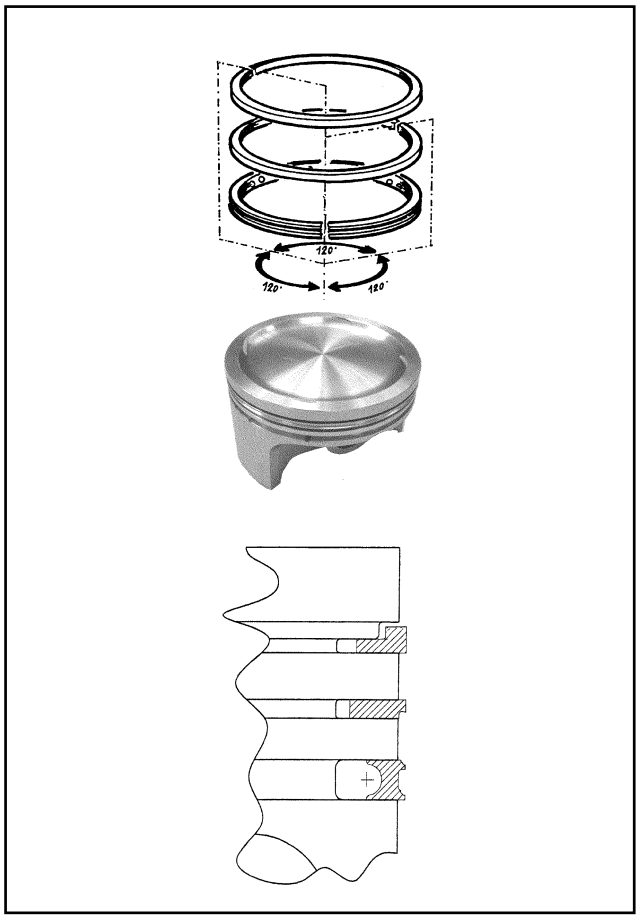

05_195

Cylinder assembly

- Fit the cylinder gasket having the selected thickness.
- Assemble the cylinder by means of the fork and the ring clamp, as shown in the figure.

Specific tool:

Piston assembly ring	**020468Y**
Fork	**020512Y**

N.B.: Before assembling the cylinder, carefully clean the lubrication duct by blowing in air, and oil the cylinder liner. Make sure that the two dowels are there.

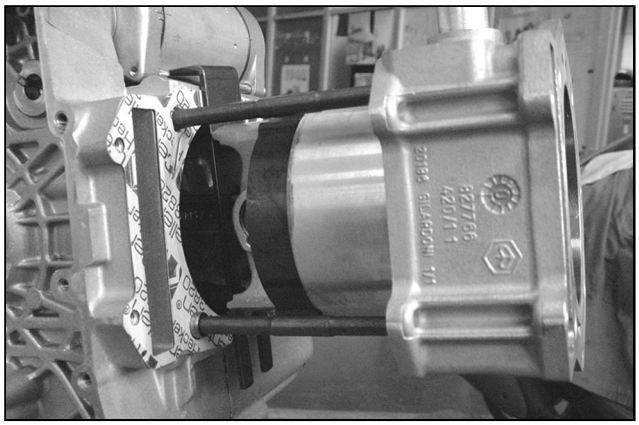

05_196

Head check

- Check that the head surface shows no signs of wear or deformations by means of a ground bar and a feeler gauge.

Maximum allowed runout: 0.1 mm

- In case of troubles, replace the head.
- Check the sealing surface of the intake and exhaust manifold.
- Check that the camshaft and equalizer pin supports show no signs of wear.
- Check that the head cover surface shows no signs of wear.
- Check that the coolant sealing pad shows no signs of oxidation.

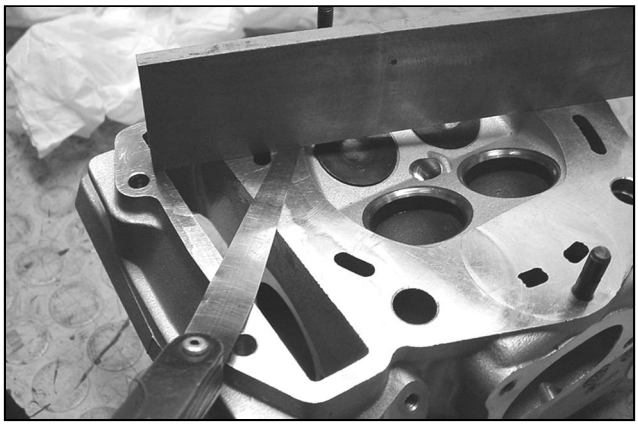

05_197

	Standard diameter
A	$13^{+0.018}_{0}$
B	$20^{+0.021}_{0}$
C	$42^{+0.025}_{0}$

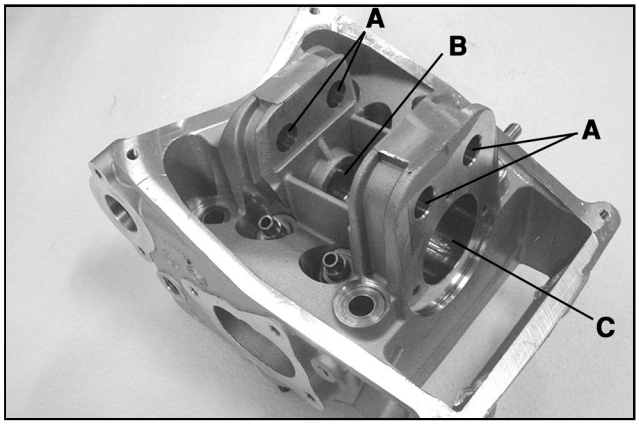

05_198

- If worn, also check the corresponding component when the head is replaced

Checking the valve sealing surfaces

- Visually check the valves sealing surfaces.

Warning - Do not change the valves assembly position (RH-LH).

- If the valve sealing surface is discontinued in one or more points, or if it is bent, replace the valve.

05_199

7

Checking valve seat wear

- Remove any carbon deposits from the valve seat.
- Check the width of the imprint on the valve seat "**V**" by means of Prussian blue.
- Measure the inside diameter of each valve guide.
- Perform the measurement according to the thrust direction of the equalizer at three different heights.

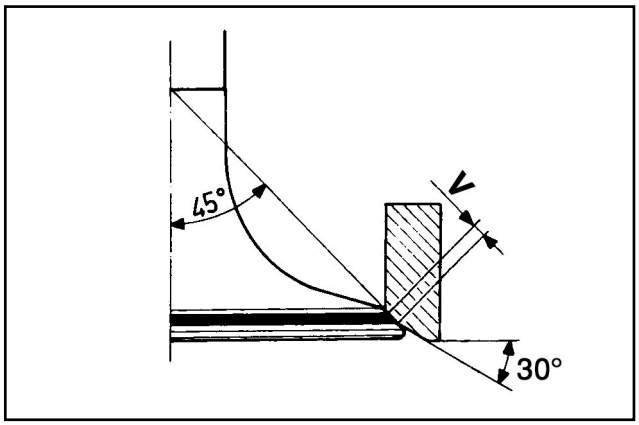

05_200

Standard value: 1 - 1.3 mm
Limit allowed: 1.6 mm

- If the imprint width on the valve seat exceeds the recommended limits, regrind the seats with the 45° cutter and then recondition them.
- In case of excessive wear or damages, replace the head.

Valves check

- Check the valve stem diameter in the three points shown in the figure.

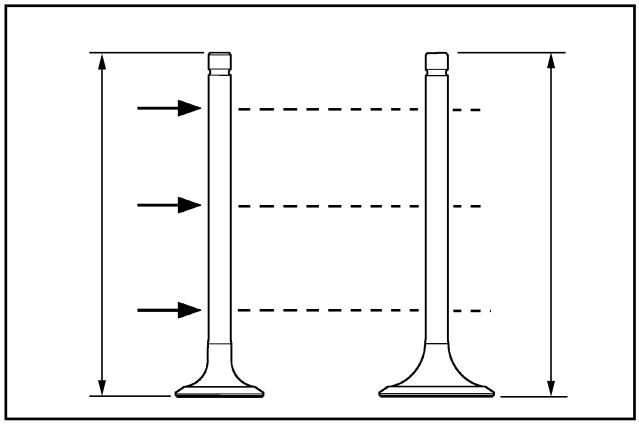
05_201

Standard diameter
Intake: 4.987 - 4.972 mm
Exhaust: 4.975 - 4.960 mm

Minimum allowed diameter
Intake: 4.96 mm
Exhaust: 4.945 mm

- Calculate the valve - valve guide clearance.

- Check the valve stem deviation by putting it on a "**V**" surface. Measure the deformation by means of a dial gauge.

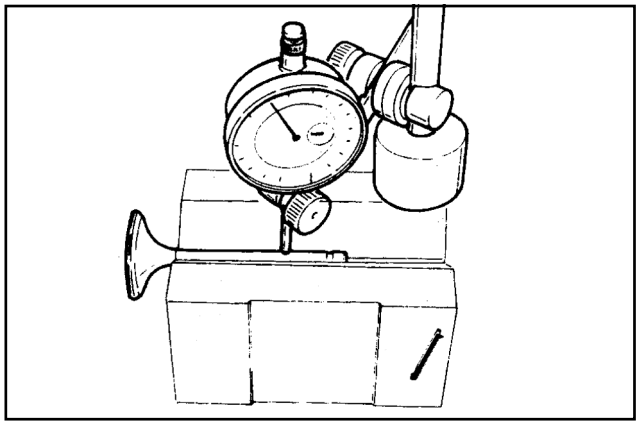
05_201_1

Limit allowed: 0.01 mm

- Check the valve head concentricity by placing a dial gauge at right angle to the valve head and turning the valve head on a **"V"** surface.

Limit allowed: 0.03 mm

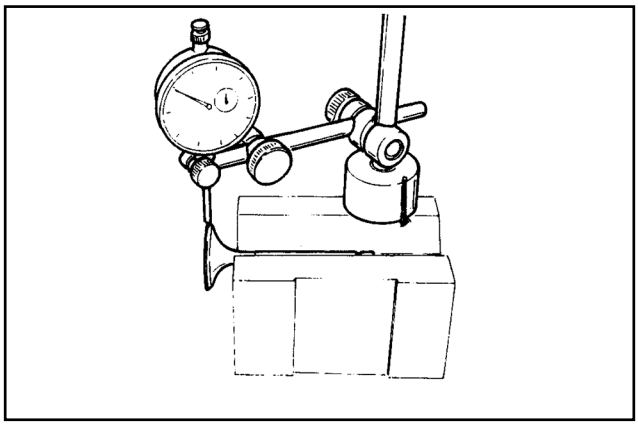

05_201_2

Valve-guide play check

- After measuring the valve guide and valve stem diameters, check the guide-and-stem play.

Intake:
Standard play: 0.013 - 0.04 mm
Limit allowed: 0.08 mm

Exhaust:
Standard play: 0.025 - 0.052 mm
Limit allowed: 0.09 mm

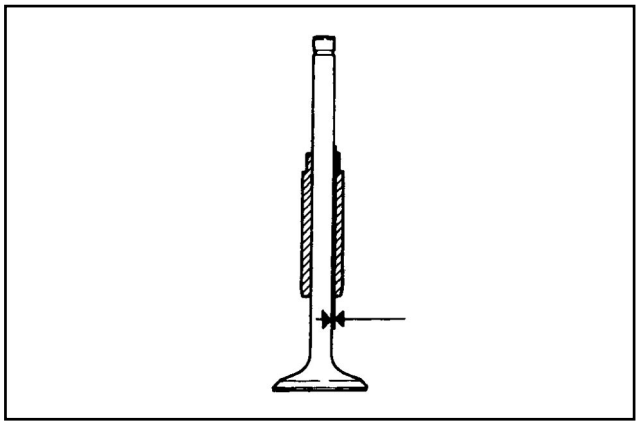

05_201_3

- Check that the surface in contact with the register articulated terminal shows no signs of wear.

Valve standard length
Intake: 95.0 ± 0.3 mm
Exhaust: 94.2 ± 0.3 mm

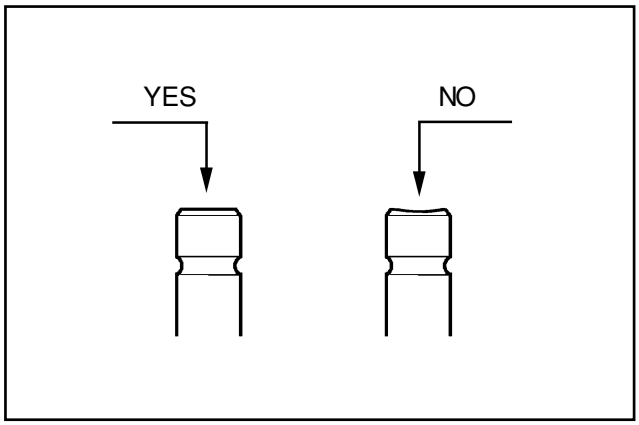

05_202

- If no troubles have been found after performing the above check, it is possible to use the same valves. To obtain a perfect sealing, it is recommendable to grind the valve seats by using a fine grain lapping compound. While grinding the valve seats, keep the head with the valve axis horizontally to prevent the lapping compound residuals from entering the valve guide stem coupling. (see figure)

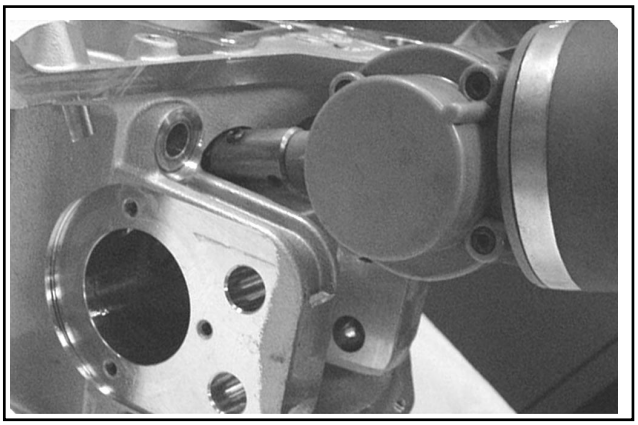

05_203

Warning - To avoid scoring the contact surface do not insist on turning the valve when the lapping compound is finished. Carefully wash the head and the valves with a product suitable for the type of lapping compound used.

N.B.: Do not change the valves assembly position.

Valves tightness test

- Fit the valves in the head.
- Test alternately the intake and the exhaust valves
- The test must be performed after filling the manifold with petrol. Check that the head is well in contact with the screw caps by keeping them pressed with the fingers.

05_204

Springs, caps, cotters check

- Check that the upper spring caps and the cotters show no signs of anomalous wear.

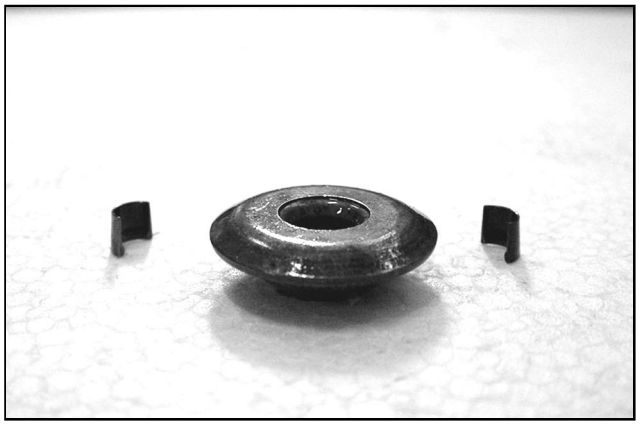

05_205

- Measure the spring free length

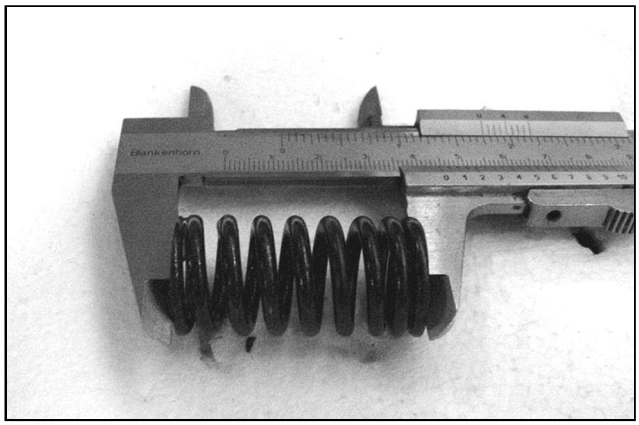

05_206

Standard length: 44.4 mm
Limit allowed after use: 43.7 mm

Valves assembly

- Put the valve spring caps on the head.
- Assemble, alternately, the 4 oil seals by means of the specific tool
- Lubricate the oil seals and the valve guides.

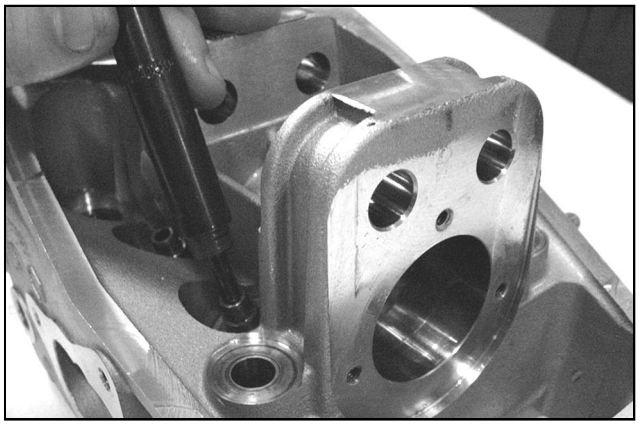

05_208

Specific tool:
Oil seal assembly tool **020306Y**

- Assemble the valves, springs, and caps. Compress the springs and insert the cotters in their seats by means of the specific tool provided with adapter.

Specific tools:
Valve assembly tool **020382Y**
Adapter **020382Y012**

N.B.: Do not change the valves assembly position. Assemble the valve springs according to the reference colour, cotters side (large coil spring).

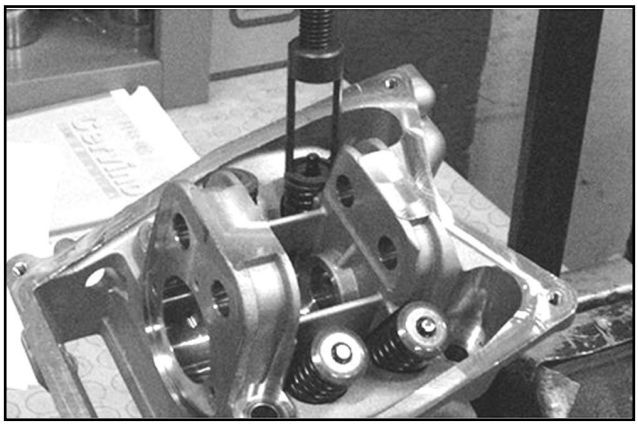

05_208_1

7

Camshaft check

- Check that the camshaft supports show no signs of anomalous wear or scoring.
- Measure the camshaft supports by means of a micrometer.

Standard diameter
Support A Ø: $42^{-0.060}_{-0.085}$ mm
Support B Ø: $20^{-0.020}_{-0.041}$ mm

Minimum allowed diameter
Support A Ø: 41.910 mm
Support B Ø: 19.940 mm

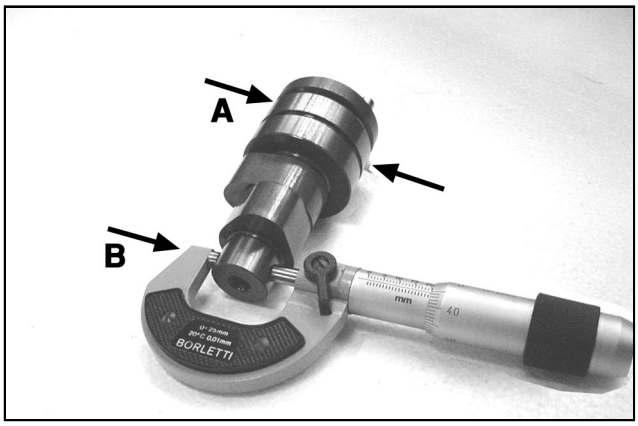

05_209

- Check the cams heights by means of a gauge

Standard height
Intake: 33.988 mm
Exhaust: 33.417 mm

Limits allowed
Intake: 33.740 mm
Exhaust: 33.170 mm

Standard end play: 0 - 0.22 mm
Maximum allowed end play: 0.3 mm

- Replace the defective parts in case of anomalous wear or values different from those prescribed.
- Check that the groove shown in the figure, seat of the stop plate, shows no signs of wear.

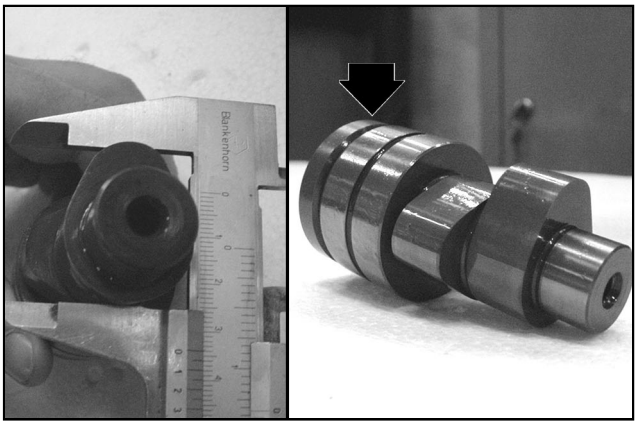
05_210

- Check that the automatic valve lifter cam, the stop roller and the rubber stop on the containment bell show no signs of wear.
- Check that the valve lifter spring is not overstressed.
- Replace any worn parts.

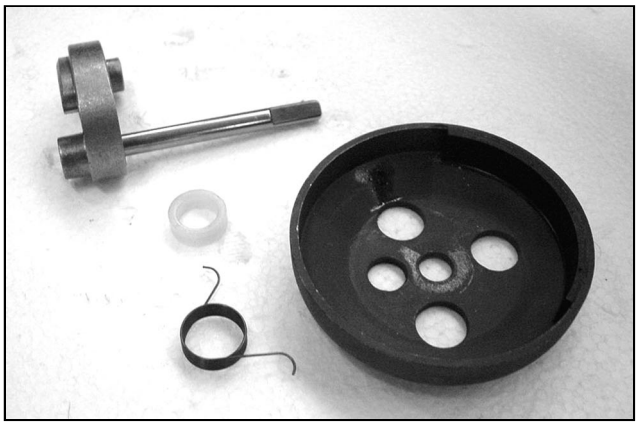
05_211

- Check that the equalizer pins show no signs of scoring or wear

Standard diameter: Ø $13^{-0.010}_{-0.018}$ mm

- Check the inside diameter of each equalizer.

Standard diameter: Ø $13^{+0.026}_{+0.015}$ mm

- Check that the cam sliding shoe and the registers articulated plate show no signs of wear.
- Replace the component if necessary.

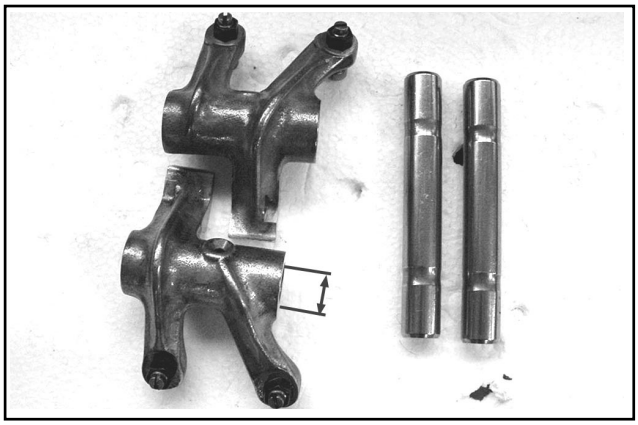
05_212

Checking timing system parts

- Check that the guide shoe and the tension pad are not excessively worn.
- Check that the camshaft control timing gear and driving shaft pinion assembly show no signs of wear.
- Replace the pads, or the whole assembly if the chain, or ring gear, are worn.

N.B.: If the chain has damaged the pinion, replace the driving shaft as described in Chapter 8-Crankcase and Driving Shaft.

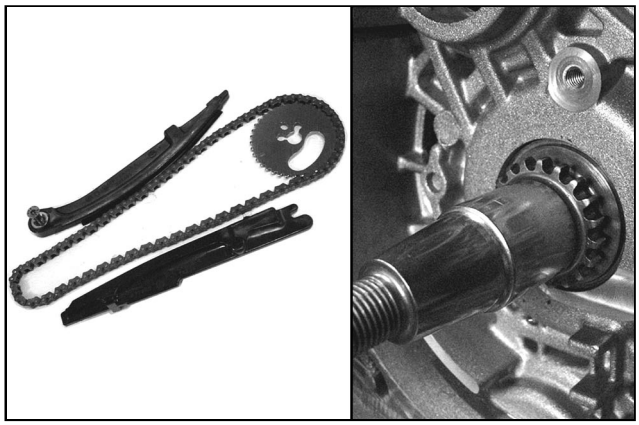

05_213

- Remove the central screw with the washer and the tightener spring. Make sure the unidirectional mechanism shows no signs of wear.
- Check the tightener spring condition.
- If necessary, replace the whole assembly.

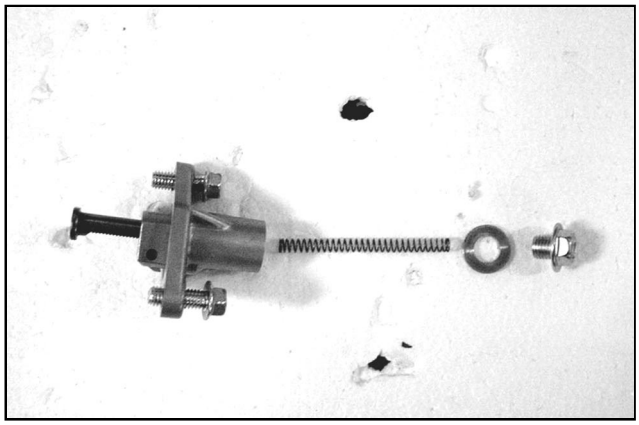

05_214

Head and timing system parts assembly

- Fit the chain guide shoe
- Fit the two centering dowels between the head and the cylinder.
- Assemble the head gasket.

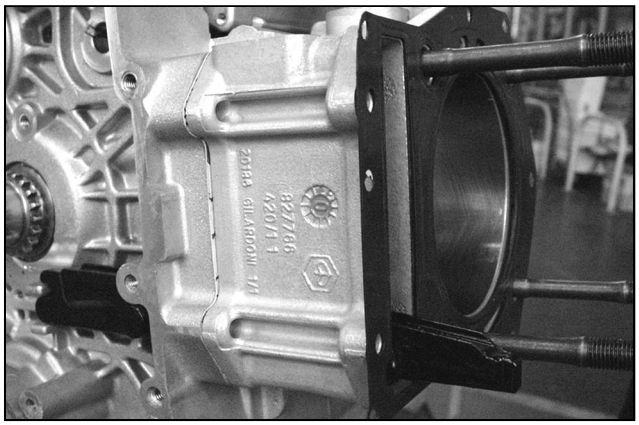

05_215

N.B.: The figure shows the assembly position of the two centering dowels between the head and the cylinder. The gasket assembly position is forced by the dowels. The head gasket is made of steel and has a standard thickness.

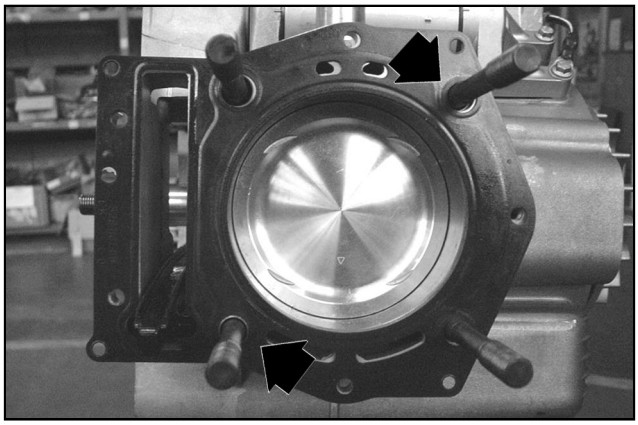

05_216

- Make sure the head lubrication duct is well clean. If necessary, clean with a jet of compressed air.
- Assemble the head.
- Oil the studs and the 4 fixing nuts.
- Screw the 4 fixing nuts in a crossed manner to the pre-torque value of 20 N·m
- Afterwards, cross-tighten them to the prescribed torque.

Tightening torque:
Head fixing nuts: 42 - 45 N·m

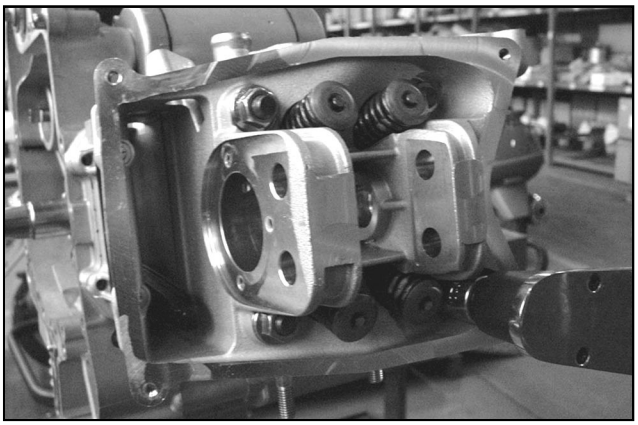

05_217

- Lock the fixing nuts, exhaust and intake side, to the prescribed torque.

Tightening torque:
Head fixing nuts, exhaust/intake: 10 - 12 N·m

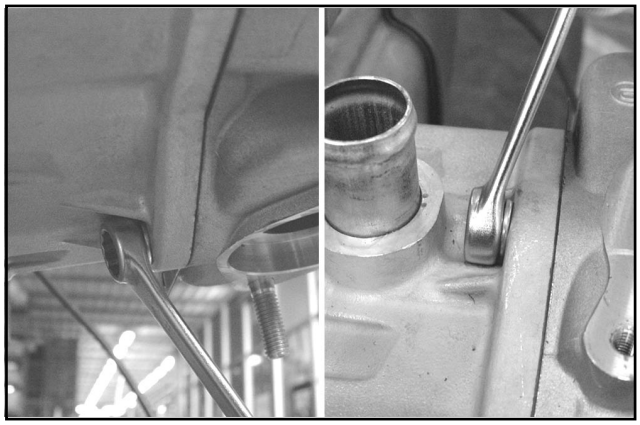

05_172

- Lock the 3 side fixings shown in the figure to the prescribed torque.

Tightening torque:
Head fixing screws: 10 - 12 N·m

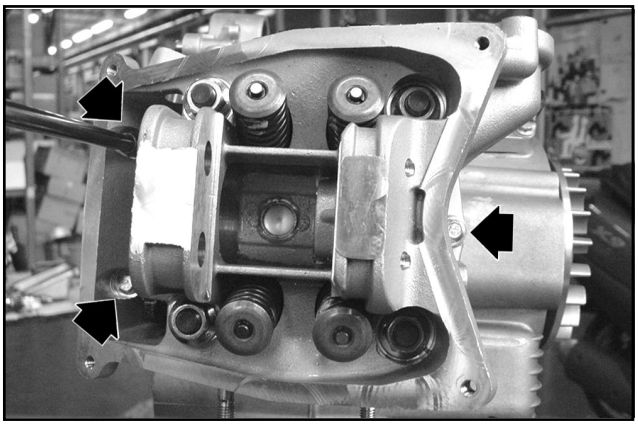

05_218

- Assemble the coolant temperature sensor with the washer and tighten to the prescribed torque.

Warning - Failure to observe the recommended tightening torques may cause damage to the sensor.

Tightening torque:
Coolant temperature sensor: 10 - 12 N·m

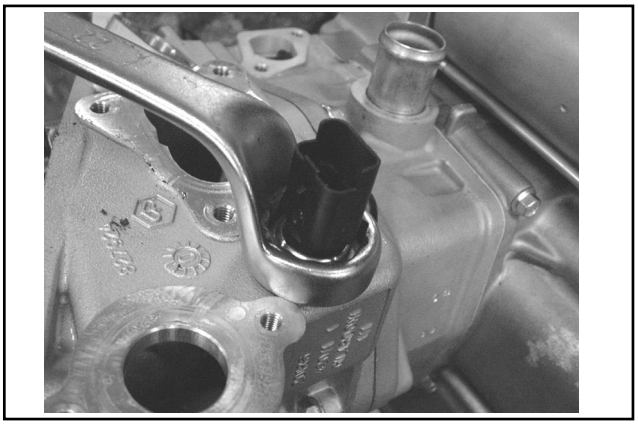

05_171

- Clean the cooling system outlet union with jets of compressed air.
- Check the O ring sealing.
- Assemble the union with the larger diameter facing the transmission side. Tighten the 2 fixing screws to the prescribed torque.
- Assemble the spark plug and tighten it to the prescribed torque.

Tightening torque:
Cooling system outlet union fixing screws: 3 - 4 N·m
Spark plug: 12 - 14 N·m

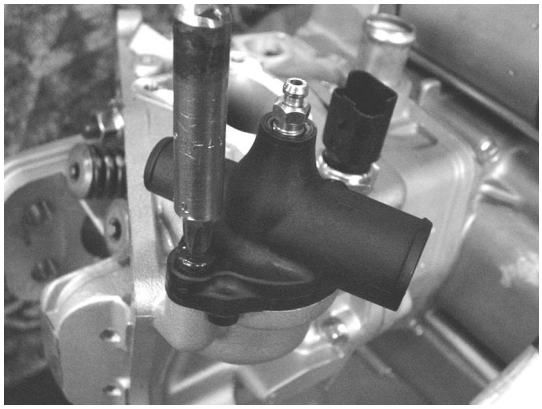

05_170

- Fit the timing control chain on the driving shaft respecting the original direction of rotation.
- Assemble the tension pad and relevant spacer, tighten the fixing screw to the prescribed torque. Smear thread locking compound LOCTITE medium type 242.

Tightening torque:
Tension pad fixing screw: 10 - 14 N·m

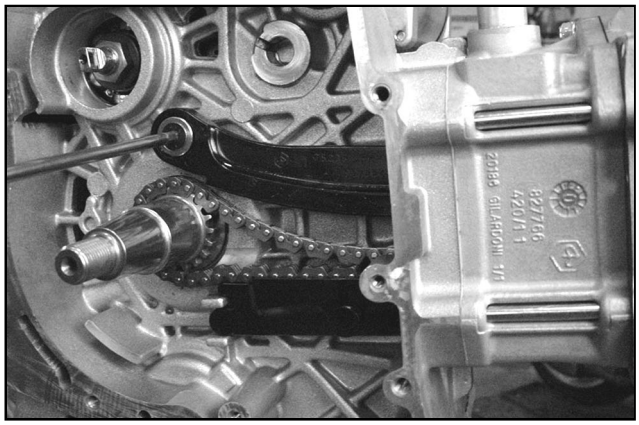

05_219

- Assemble the pins and equalizers from the flywheel side.
- Lubricate the 2 equalizers through the upper holes.

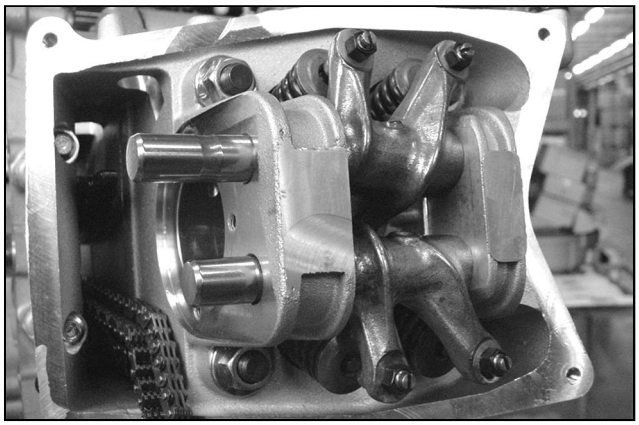

05_220

- Clean the camshaft by means of compressed air, in particular the groove, seat of the stop plate.
- Lubricate the 2 supports.
- Assemble the camshaft in the head, with cams opposite to the equalizers.

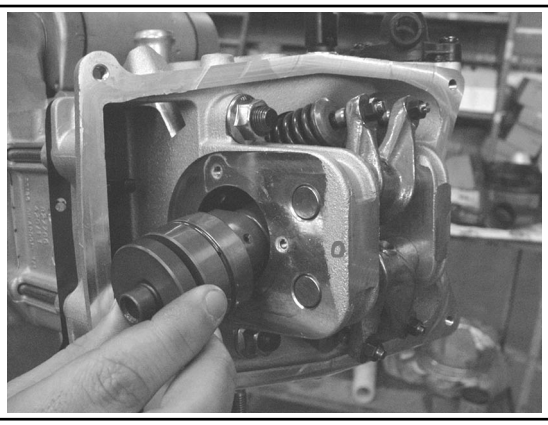

05_167

- Remove any LOCTITE residuals from the camshaft stop bracket fixing screws by means of a brush.
- Apply LOCTITE 242 to the fixing screws after cleaning them from any residual of thread locking compound.
- Assemble the camshaft stop bracket with countersinks well visible. Tighten the 3 fixing screws to the prescribed torque taking care not to damage the internal hexagon.

Tightening torque:
Camshaft stop bracket fixing screws: 4 - 6 N·m

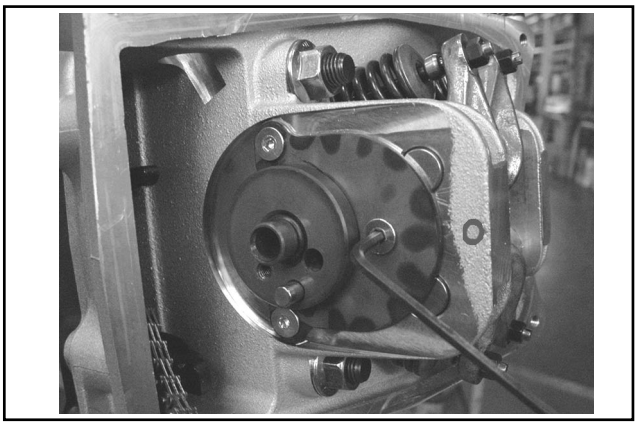

05_166

- Check that the phonic wheel timing pin opening and toothing show no signs of deformation or dents.

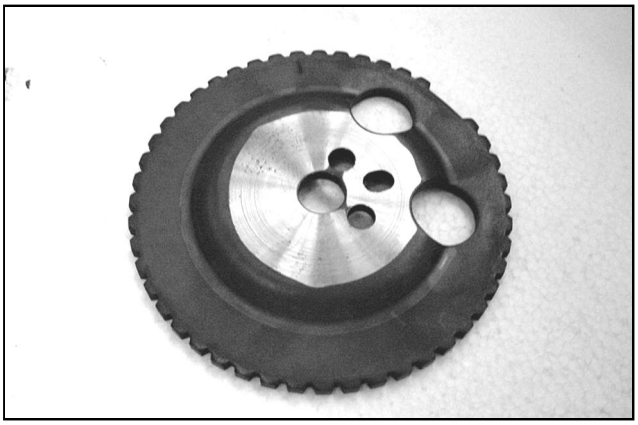

05_221

- Assemble the phonic wheel on the camshaft, keeping the timing reference mark visible.

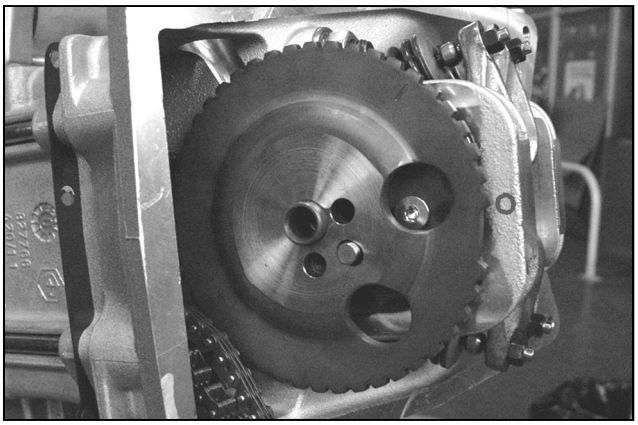

05_222

- Assemble the engine revs-timing sensor with a new O ring as shown in the figure. Tighten the 2 fixing screws to the prescribed torque.

N.B.: Check this component as described in Chapter 9-Injection.

Tightening torque:
Timing revs sensor fixing screws: 3 - 4 N·m

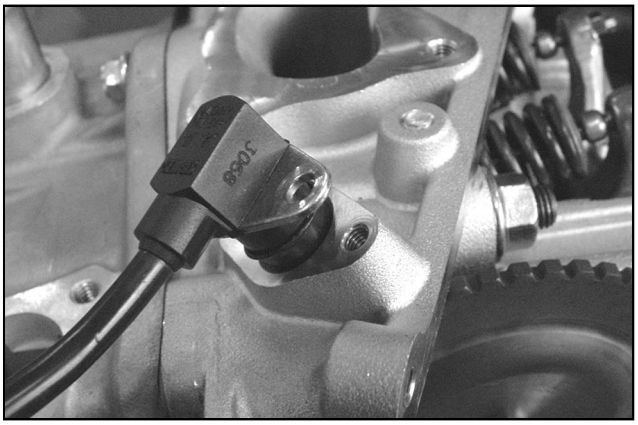

05_223

- Assemble the idler gear with torque limiter, flywheel and flywheel cover as described in Chapter 6-Flywheel and Starting System and in Chapter 5-Flywheel Cover

N.B.: To facilitate the assembly operation, assemble the flywheel cover without the cooling system sleeves.

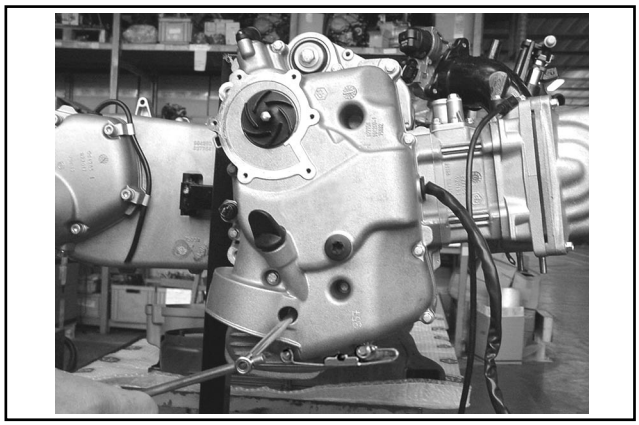

05_089

- Remove the timing control plug by means of a TORX wrench.

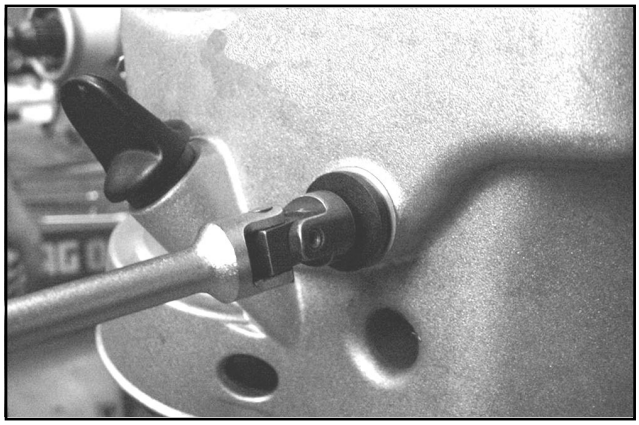

05_224

- Align the phonic wheel and head reference marks as shown in the figure.

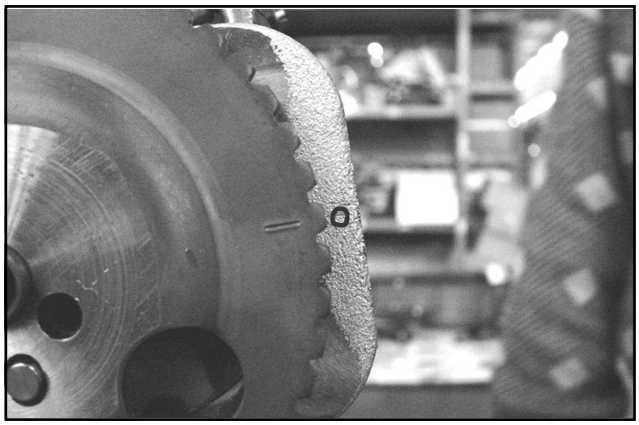

05_225

- Keep the chain slightly tensioned, turn the driving shaft by means of the driving pulley until the reference mark on the magneto support and the one on the flywheel cover are aligned.

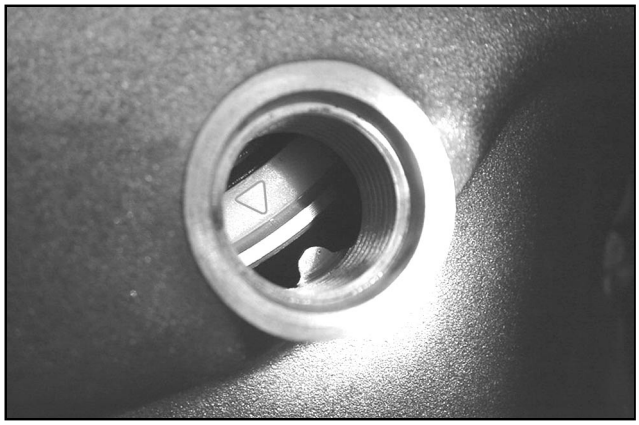

05_226

- Fit the chain on the camshaft timing gear
- Fit the timing gear on the camshaft, aligning the reference marks.

N.B.: During the timing check, keep the chain tensioned by pressing from the tightener compartment side.

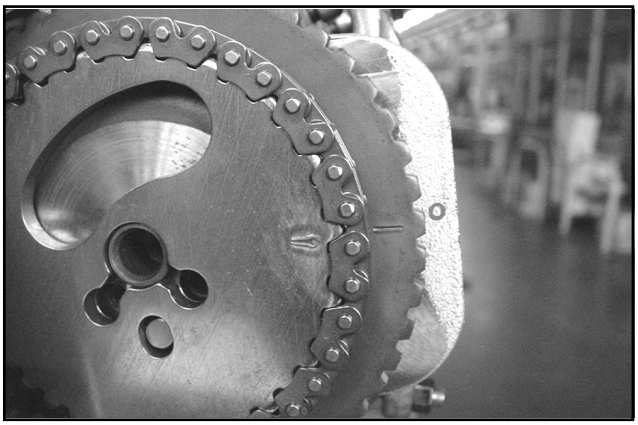

05_227

- Assemble the counterweight
- Center it by means of the bell fixing screws.
- Tighten the counterweight fixing screw to the prescribed torque. Apply LOCTITE 242.

Tightening torque:
Counterweight fixing screw: 7 - 8.5 N·m

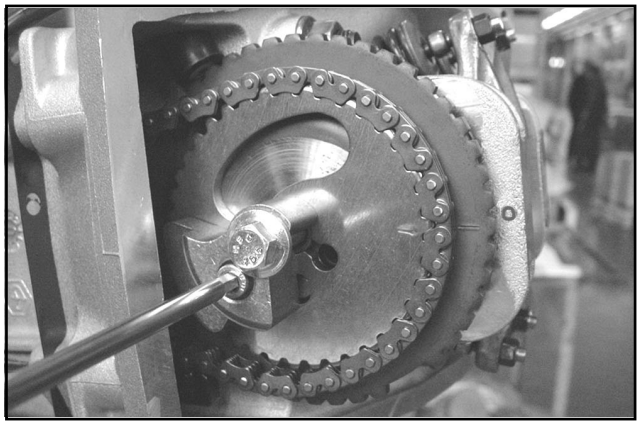

05_228

- Remove the central screw
- Install the valve lifter counterweight paying attention to correctly position the stop ring.
- Oil the decompressor counterweight control pin

05_229

- Assemble the return spring. Load it by about 3/4 of a turn.

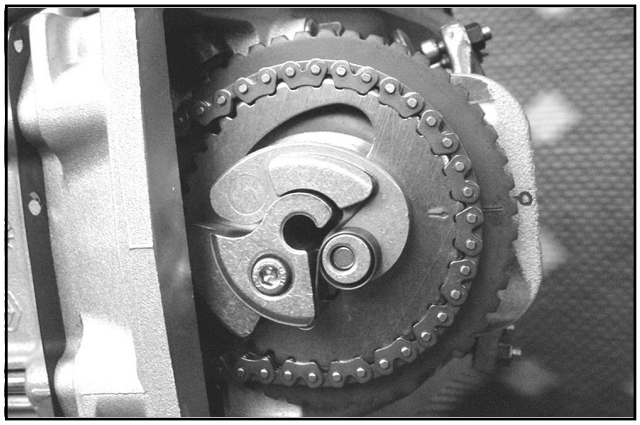

05_230

- Turn the engine. Move the reference marks to the upper position as shown in the figure (intake end)

05_231

- Fit the valve lifter counterweight stop bell.
- Tighten the fixing screw to the prescribed torque, using LOCTITE 242.

N.B.: The bell timing is given by the head of the counterweight fixing screw

- Check that the decompression counterweight is free and the returning action of the spring.

Tightening torque:
Valve lifter counterweight stop bell fixing screws: 30 - 35 N·m

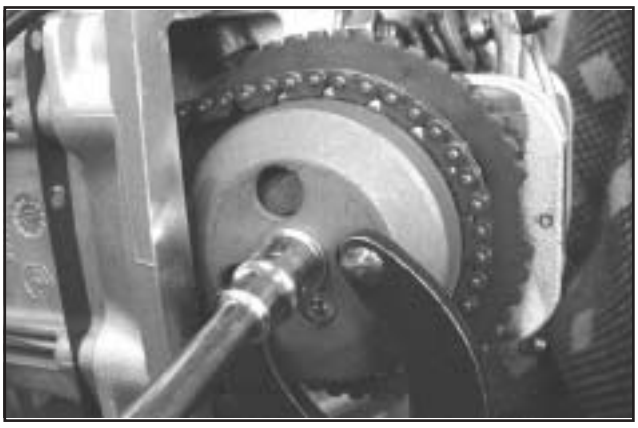

05_232

- Position the engine with the valve play adjustment timing reference marks aligned with the head
- Check the valve-equalizer play by means of a thickness gauge

Prescribed play: intake 0.15mm (cold engine)
exhaust 0.15mm (cold engine)

- If different values are measured, adjust by unloosing the check nut and by acting on the register with a tool as shown in the figure.

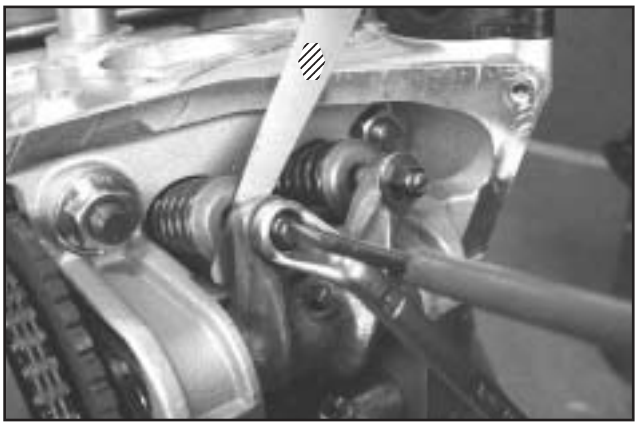

05_233

Checking the revs-timing sensor air gap

- Align one tooth of the phonic wheel with the revs-timing sensor.
- Check the air gap by means of a feeler.

Standard air gap: from 0.20 to 0.70 mm

- Perform the check in 3-4 points.

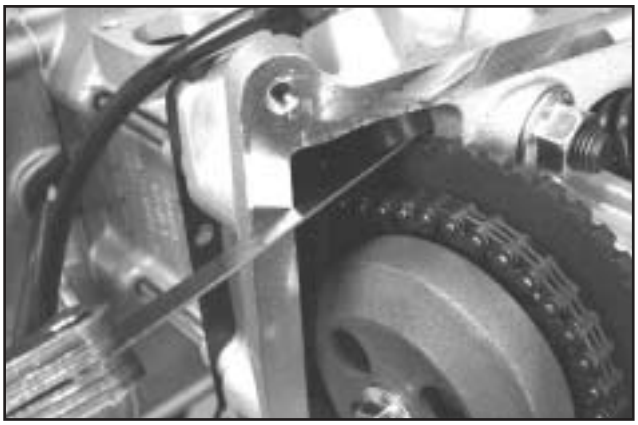

05_234

- Set the tightener cursor in the rest position by keeping pressed the stop dog

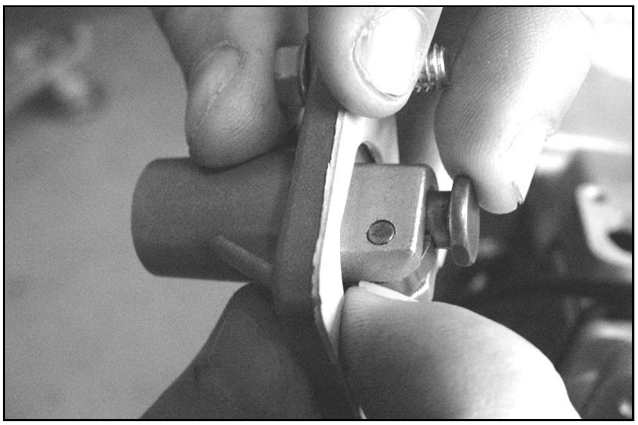

05_235

- Assemble the tightener on the cylinder with a new gasket.
- Tighten the two fixing screw to the prescribed torque.

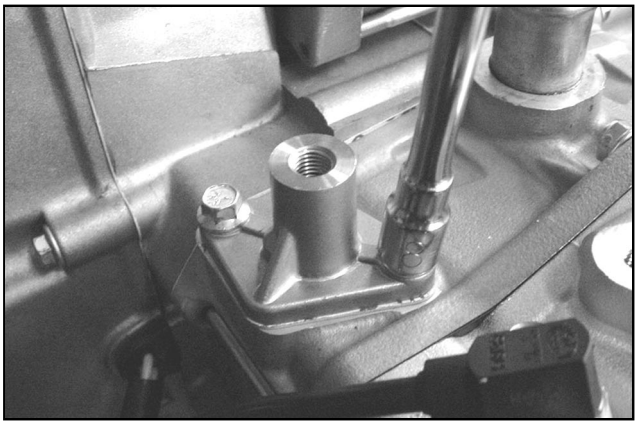

05_236

Tightening torque:
Tightener fixing screws: 11 - 13 N·m

- Fit the spring with the central screw and washer
- Tighten the central screw to the prescribed torque

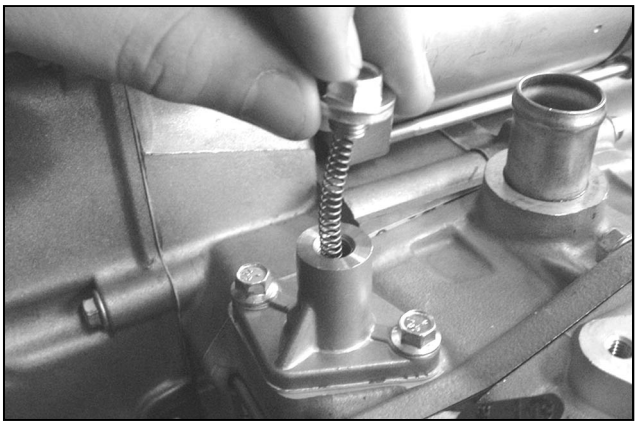

05_237

Tightening torque:
Tightener screw: 5 - 6 N·m

Tappets cover assembly

- Check the gasket condition
- Assemble the tappets cover and tighten the 4 screws to the prescribed torque

N.B.: Make sure the gasket is in the right position.

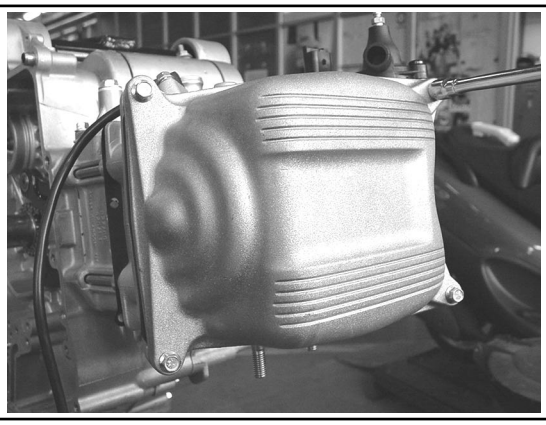

05_156

Tightening torque:
Tappets cover fixing screws: 11 - 13 N·m

- Assemble the transmission cover complete with net filter, and the external transmission cover according to the procedure described in Chapter 3-Automatic Transmission

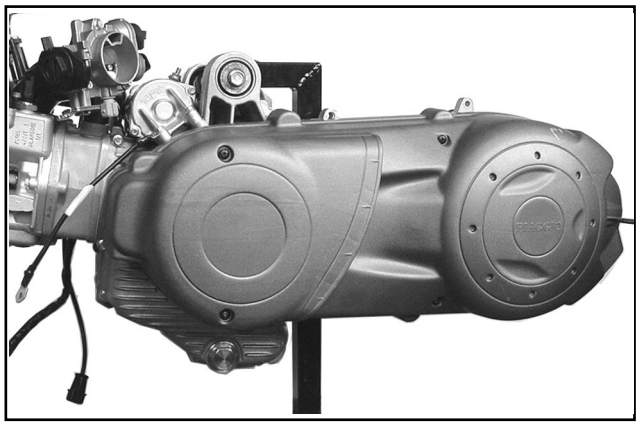

05_006

- Assemble the cooling system sleeves using new clamps. Follow the procedure described in Chapter 5-Flywheel cover.

05_081

Intake manifold parts disassembly

Injector disassembly

N.B.: Remove the injector from the manifold only if it is faulty. Check the injector operation with the injector assembled on the manifold (see Chapter 9-Injection)

- To remove the injector, first remove the T joint central fixing screw supporting the injector.

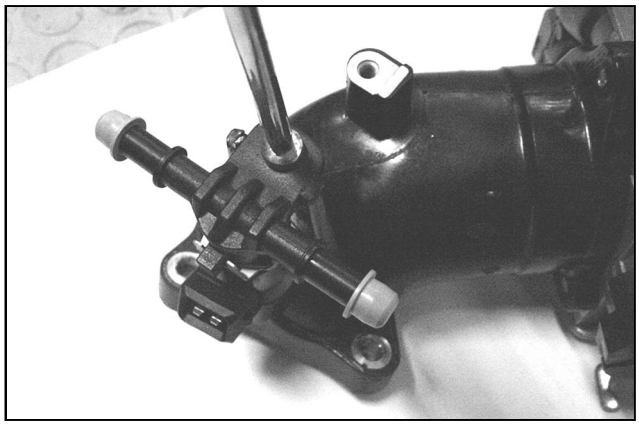

05_238

- Remove the manifold injector.

N.B.: The abovementioned procedure is necessary to be able to wash or replace the manifold.

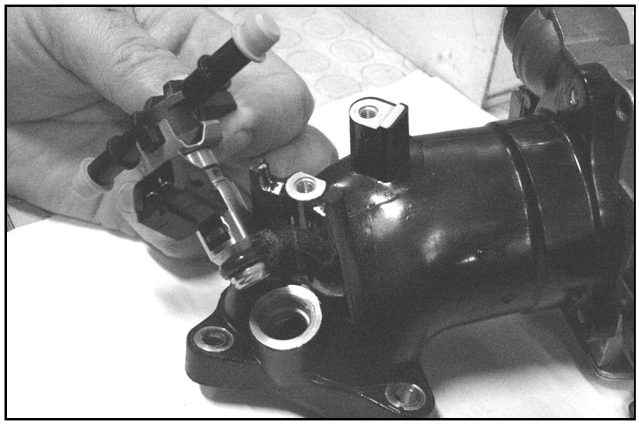

05_239

Injector assembly

- Check that the components are well clean
- Assemble new O rings and lubricate them with grease.
- Apply thread locking compound LOCTITE 242 to the fixing screw and tighten it to the prescribed torque.
  Note.
  After restoring the engine, check again that the CO% value at idle is within the prescribed range.
  Should the CO% exceed the allowable range carry out the adjustment as described on page 9-95

Tightening torque:
Injector support fixing screw: 3 - 4 N·m

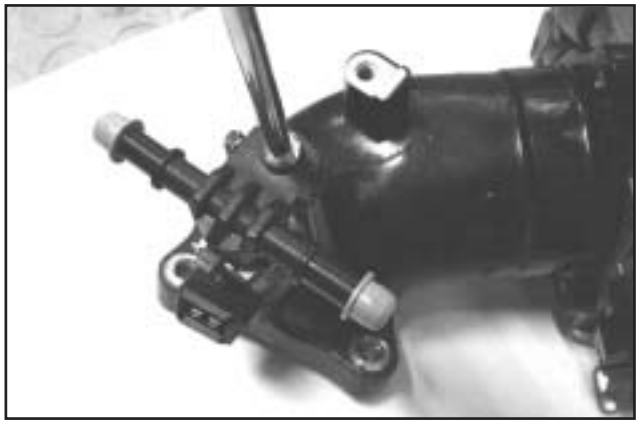

05_238

Disassembly of throttle body from manifold

N.B.: The throttle body assembly includes various components that come supplied all together.
Check the components as described in Chapter 9-Injection.

Warning - The throttle body is supplied already calibrated. Absolutely avoid tampering with the valve beat register as the register has been suitably sealed. For any troubles related with the slow running, see Chapter 9-Injection.

N.B.: The throttle body can be removed with the manifold disassembled or assembled.

- Remove the 3 fixing screws shown in the figure.

05_241

- Check the condition of the sealing lips on the coupling surfaces between manifold-throttle body and manifold-head.

Warning - The penetration of air may compromise the injection system correct operation, in particular with engine running at idle speed.

05_242

- Check that the throttle valve and relevant duct are well clean.
- Also check that the additional air duct operated by the Stepper-motor is well clean.

05_243

Throttle body assembly to manifold

- Perform the disassembly operations in the reverse order. Tighten the 3 fixing screws to the prescribed torque

Tightening torque:
Throttle body fixing screws: 11 - 13 N·m

05_241

Intake manifold assembly to engine

- Assemble the intake manifold on the engine
- Insert the 3 fixing screws and tighten them to the prescribed torque. One of the screws is provided with a clamp supporting the cooling system sleeve.

Tightening torque:
Intake manifold fixing screws: 11 - 13 N·m

05_244

Note.
Fitting the throttle body on the manifold.
If the throttle body is replaced, reset the T.P.S. as described on page 9-87
and adjust the CO%at idle as derected on page 9-95.
After restoring the engine, check again that the CO% value at idle is within the prescribed range.
Should the CO% exceed the allowable range, carry out the adjustment as described on page 9-95.

TABLE OF CONTENTS

CRANKCASE AND DRIVING SHAFT 8

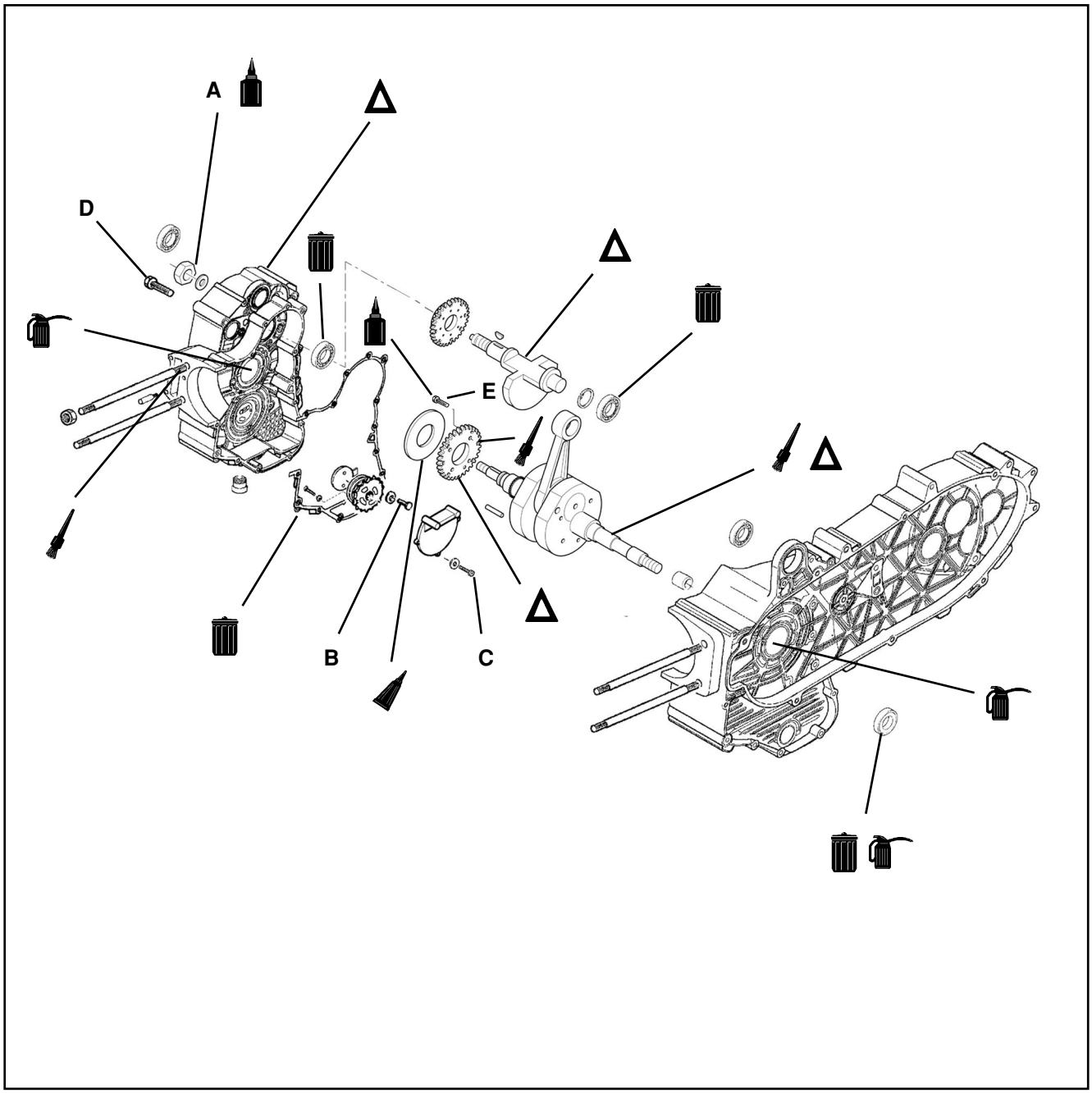

LUBRICATE WITH OIL
APPLY PRODUCT
WARNING: HANDLE WITH CARE
LUBRICATE WITH GREASE
CLEAN WITH CARE
ALWAYS REPLACE

REFERENCE	A	B	C	D	E	F	G	H	I	L	M	N	O	P	Q
QUANTITY	1	2	2	14	4										
TORQUE N·m	25-29	5-6	8-10	11-13	10-12										

- Remove the external transmission cover, the transmission cover complete with net filter and the driving pulley assembly as described in Chapter 3-Automatic transmission.

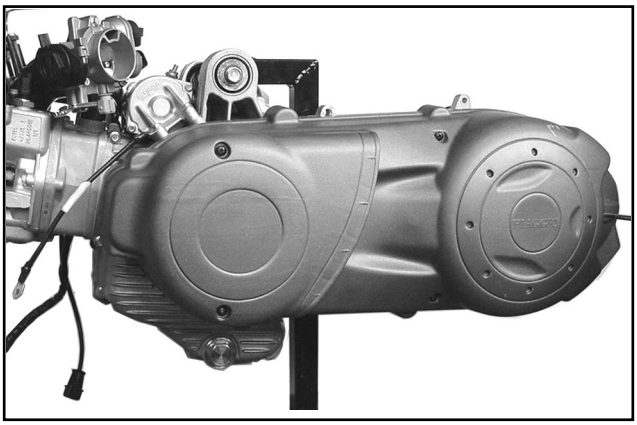

05_006

- Remove the flywheel cover with the cooling system sleeves as described in chapter 5-Flywheel cover

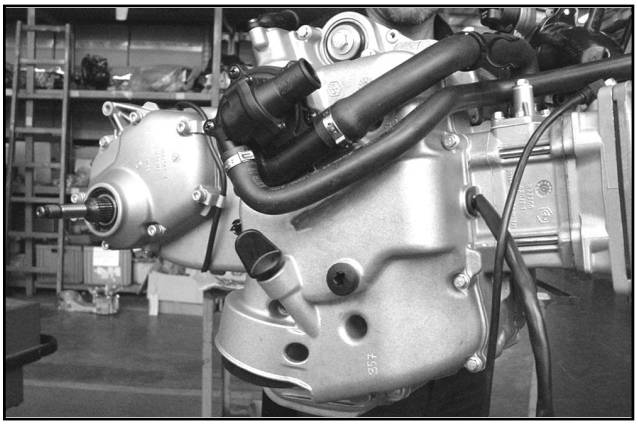

05_245

- Remove the magneto flywheel with the starting control as described in Chapter 6-Flywheel and Starting System.

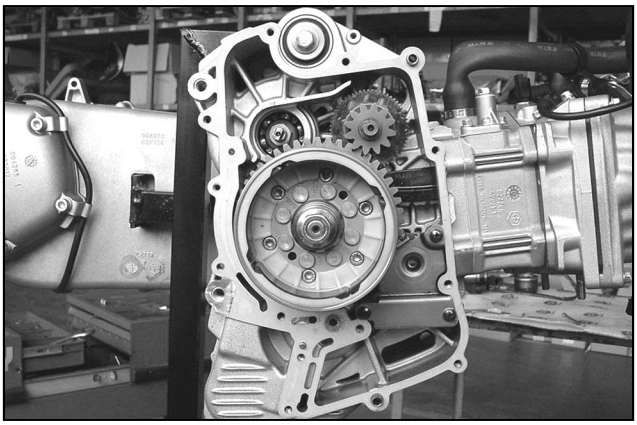

05_246

- Remove the thermal assembly (cylinder, head, piston) as described in Chapter 7-Thermal Assembly.

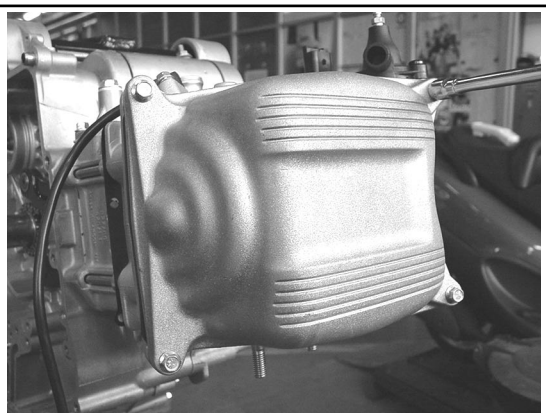

05_156

- Check the driving shaft end play before you open the engine crankcase.
  Use for this procedure a plate (e.g. specific tool) and a stand with dial gauge, specific tool

Specific tool:

Crankcase separating plate	**020262Y**
Dial gauge and stand	**020335Y**

Standard play: 0.10 - 0.50 mm
Limit allowed after use: 0.60 mm

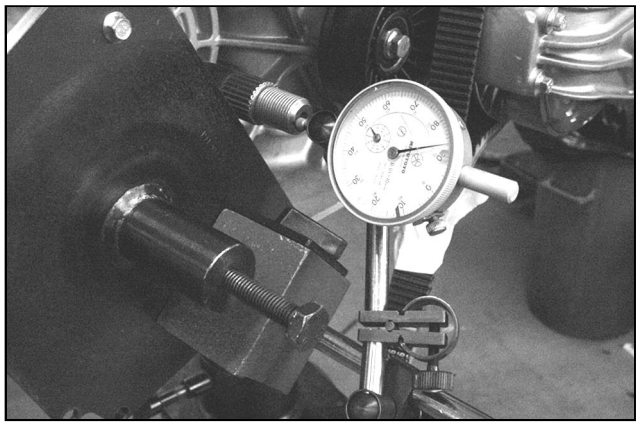

05_247

- If the play exceeds the indicated values, it means that the supporting surfaces of the crankcase driving shaft are worn.
- To correctly measure the play, completely restore the play in both directions by acting between the crankcase and the driving shaft.

Engine crankcase opening

- Remove the engine mount setscrew on the half crankcase, flywheel side.

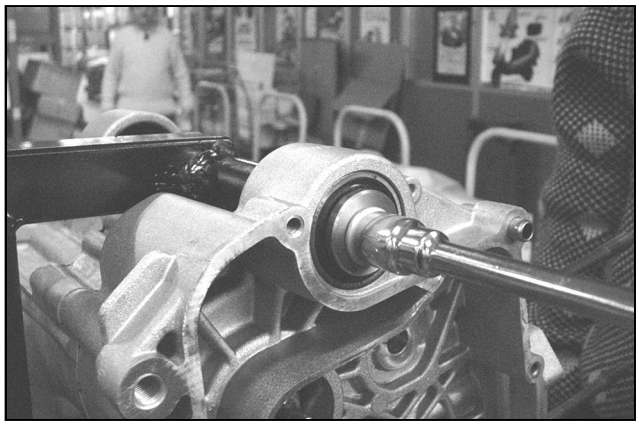

05_248

- Remove the crankcase 14 coupling screws.

N.B.: The fixing screws come in 3 different lengths. Take note of their right position.

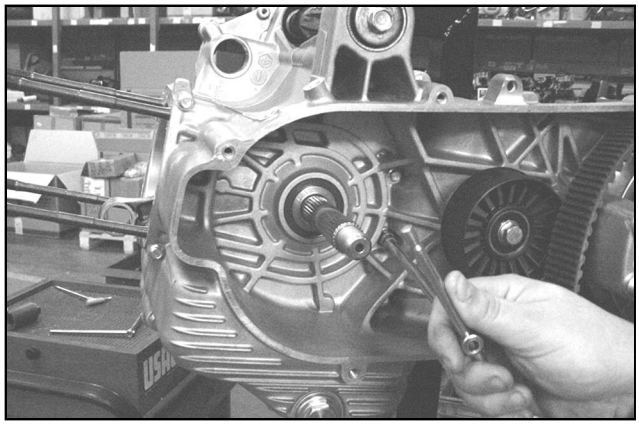

05_249

- Separate the crankcase by keeping assembled the driving shaft on the half crankcase, flywheel side.
- Remove the coupling gasket

N.B.: The support bush can be maintained in the half crankcase, flywheel side.

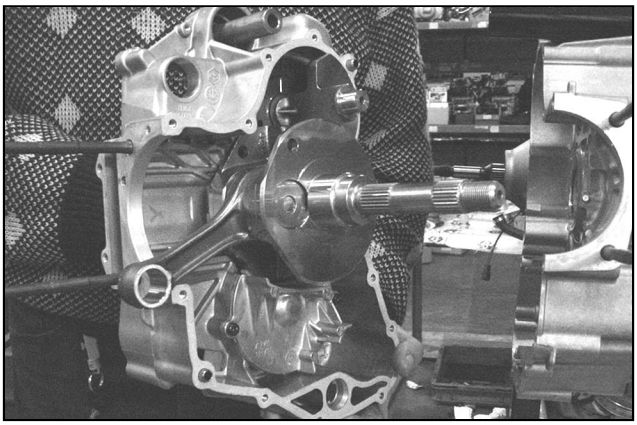

05_250

Driving shaft disassembly

- Before disassembling the driving shaft, check the timing with the countershaft. Perform this check by turning the driving shaft until the two holes on the driving shaft are aligned with the hole on the countershaft control gear.
  This position also allows for the driving shaft removal.

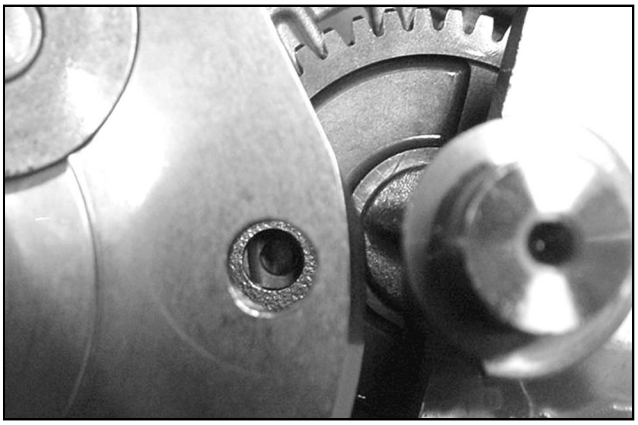

05_251

- Remove the driving shaft with the shim washer, flywheel side.

Warning - While separating the crankcase and removing the driving shaft, take care that the shaft threaded ends do not interfere with the main bearing brass. Failure to observe this recommendation may cause damage to the main bearing brass.

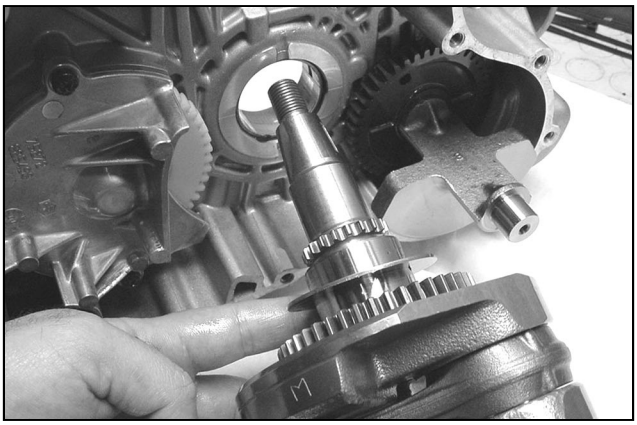

05_252

Removing the countershaft control gear and the oil pump.

- Remove the control gear by acting on the 4 fixing screws.

N.B.: The head screws are blocked with LOCTITE thread locking compound. Take care not to damage the control hexagon. To achieve the best results, it is recommendable to use a hexagonal socket wrench.
Remove the gear only when necessary.

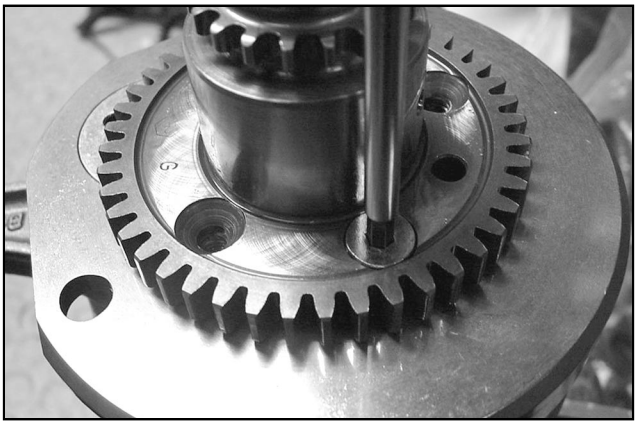

05_253

Countershaft disassembly

- Position the specific tool as shown in the figure.

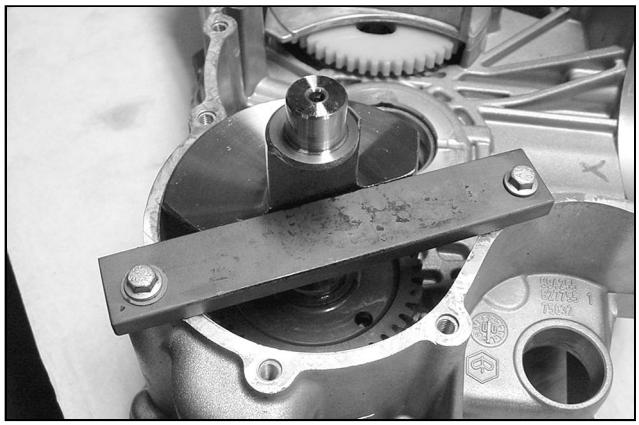

05_254

Specific tool
Countershaft lock wrench: 020479Y

- Remove the fixing nut and relevant washer.

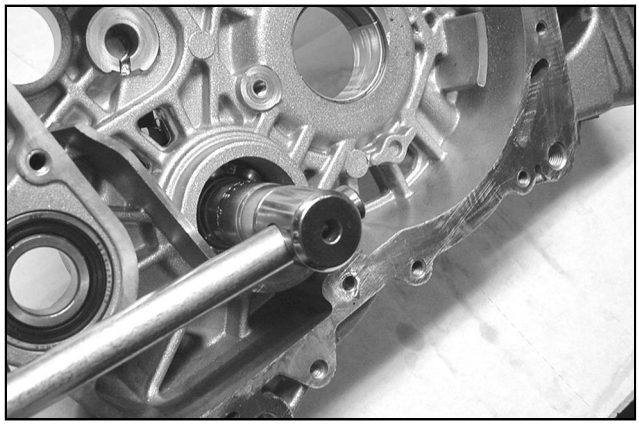

05_255

- Remove the specific tool and withdraw the countershaft complete with control gear.

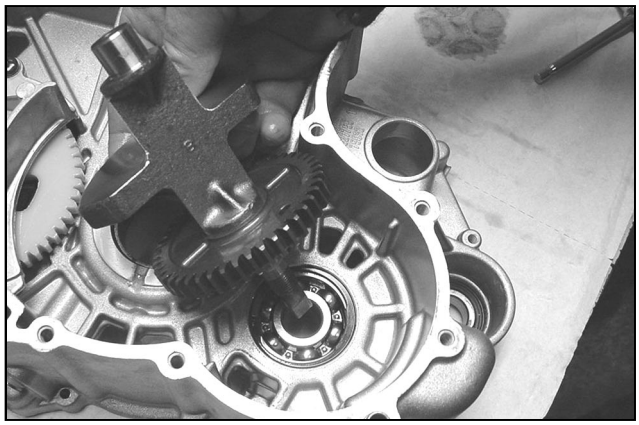

05_256

Oil pump disassembly

- Remove the oil pump compartment gate by unscrewing the 2 fixing screws and relevant washers.

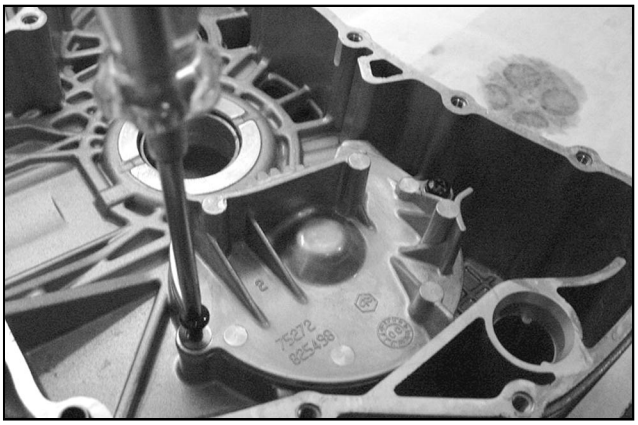

05_258

- Remove the oil pump complete with gear by unloosing the 2 fixing screws through the slots situated on the gear itself.

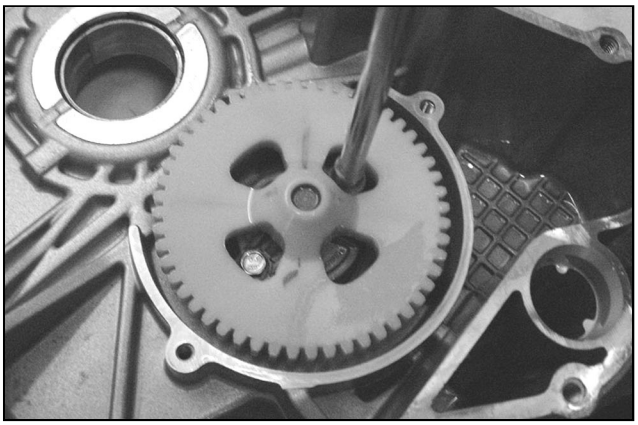

05_259

- Remove the gasket.

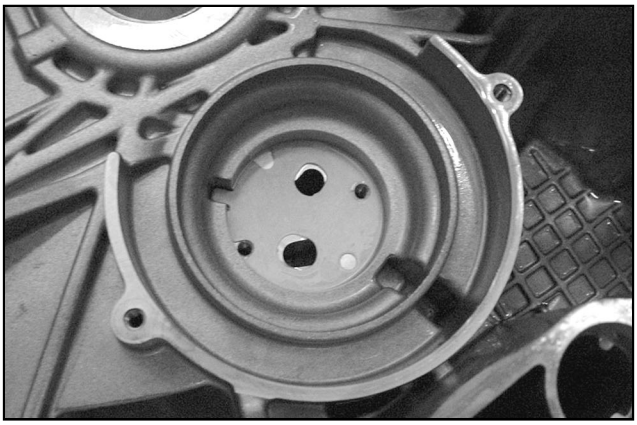

05_260

Replacing the countershaft bearings

- Check the bearings out for anomalous noise or play. Replace if necessary.

Half crankcase flywheel side

- Remove the snap ring situated on the inner side.

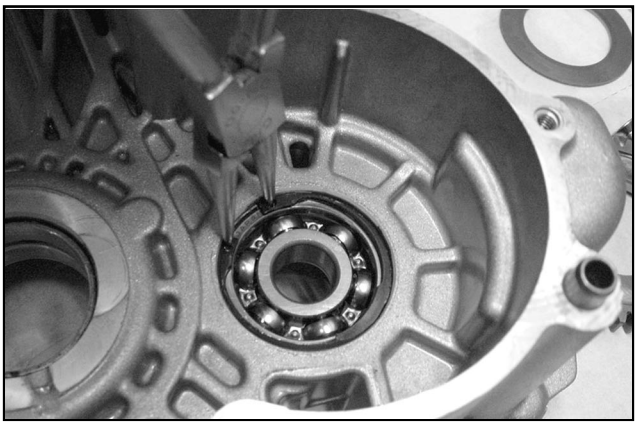

05_261

- Overturn the half crankcase.
- Remove the bearing from the half crankcase flywheel side by means of the specific tool and a hammer.

Specific tool:

Punch handle	**020376Y**
Adapter 37x40 mm	**020358Y**
17 mm guide	**020439Y**

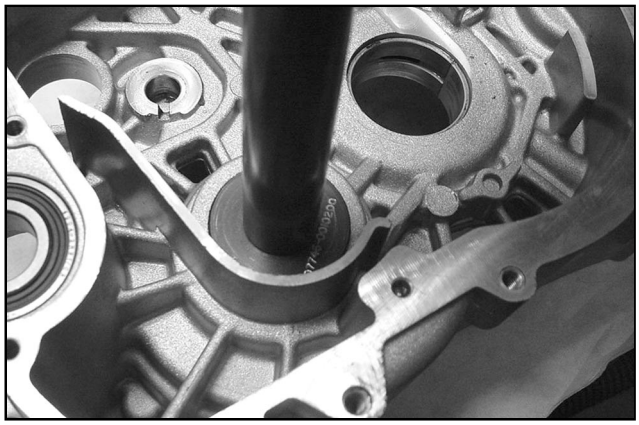

05_262

- Remove the bearing from the half crankcase transmission side by means of the specific tool.

Specific tool:

Pliers	**001467Y008**
Bell	**001467Y007**

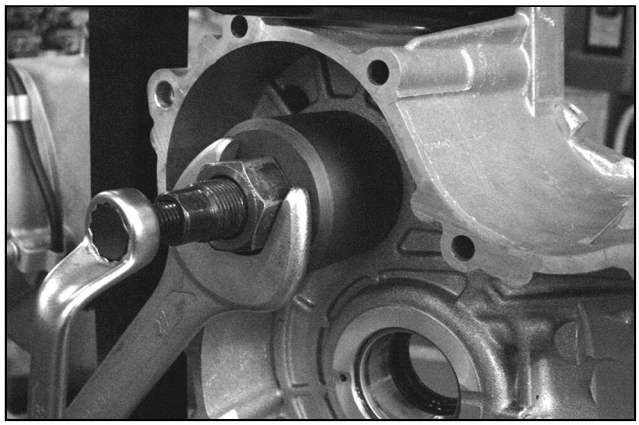

05_263

- Before assembling a new bearing, heat the half crankcase flywheel side by means of the specific tool
- Put the half crankcase on a wooden base

Specific tool:

Heater	**020151Y**

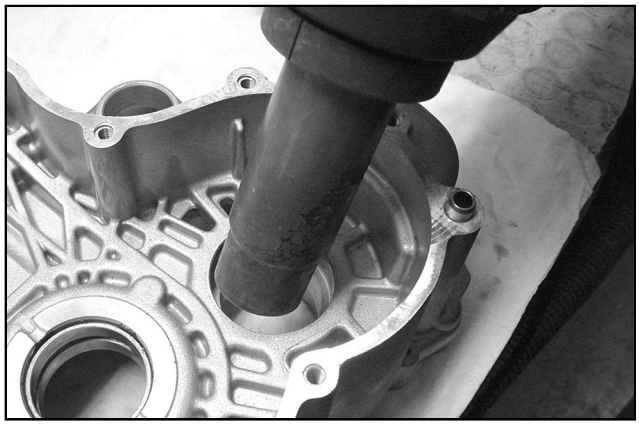

05_264

- Fit a new bearing on the specific tool after having greased the fitting slot
- Assemble the new bearing on the half crankcase by means of the specific tool.

N.B.: If a bearing with a plastic cage is used, position the balls so that they face the crankcase inner side.

Specific tool:

Punch handle	**020376Y**
Adapter 42x47 mm	**020359Y**
17 mm guide	**020439Y**

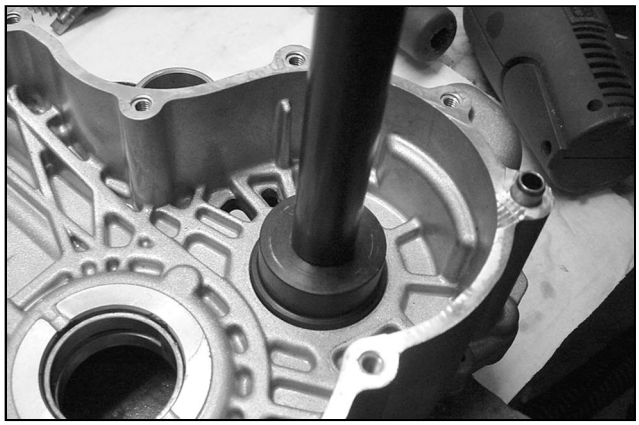

05_265

- Assemble the snap ring.

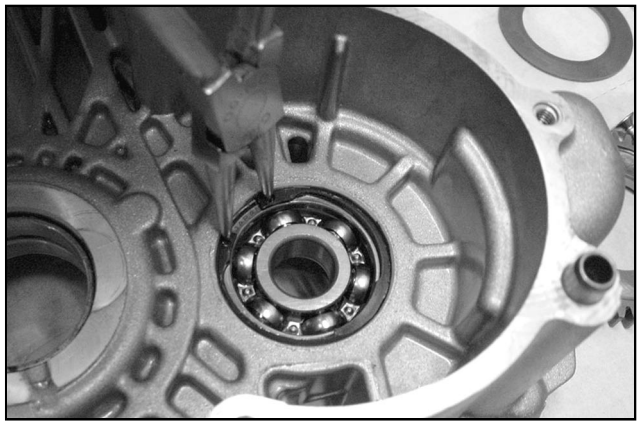

05_261

- Before assembling the new bearing on the crankcase transmission side, heat the housing by means of the specific tool.

Specific tool:

Heater	**020151Y**

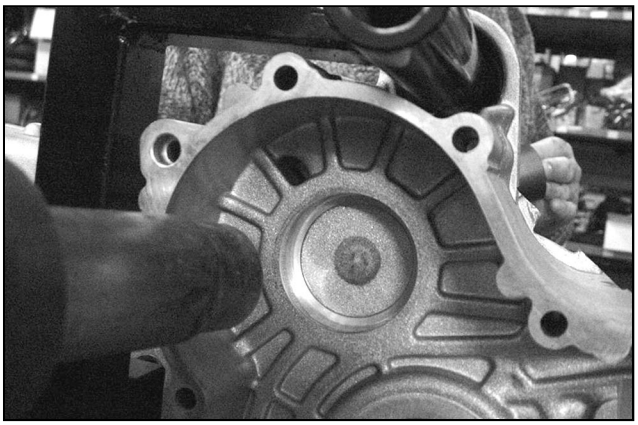

05_266

- Fit a new bearing on the specific tool after having greased the fitting slot
- Assemble a new bearing on the engine crankcase by means of the specific tool.

N.B.: If a bearing with a plastic cage is used, position the balls so that they face the crankcase inner side.

Specific tool:

Punch handle	**020376Y**
Adapter 42x47 mm	**020359Y**
17 mm guide	**020439Y**

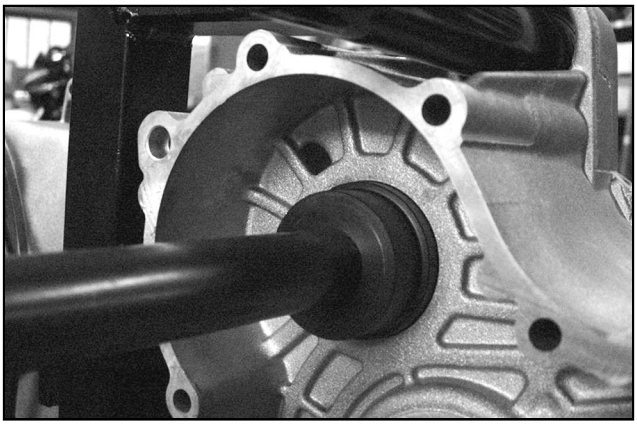

05_267

Checking driving shaft components.

- Check the connecting rod end play.

Standard play: 0.20 - 0.40 mm

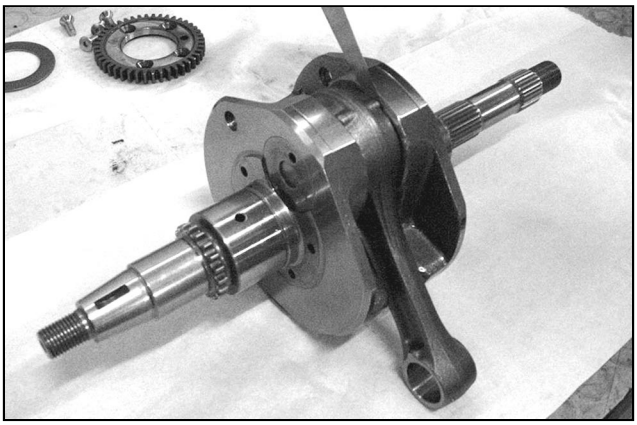

05_268

8

- Check the connecting rod diametral play.

Standard play: 0.046 - 0.076 mm

- Check that the end play containment surfaces show no signs of scoring. Measure the driving shaft width by means of a gauge, as shown in the figure.

N.B.: Check that the measuring is not distorted by the driving shaft support radius.

Standard dimensions: 63.6 - 63.45 mm

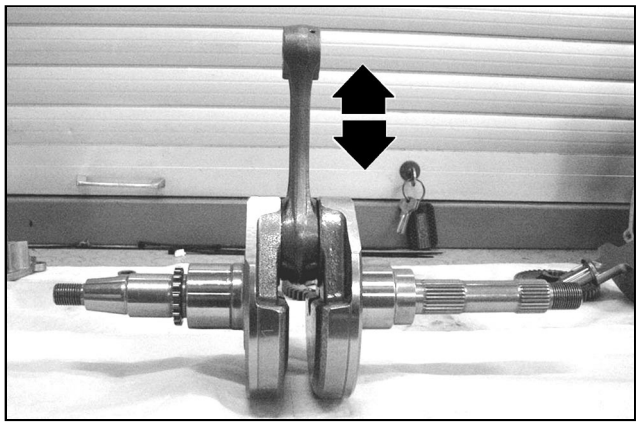

05_269

Warning - The driving shaft can be reused when the width conforms to the standard values and the surfaces show no signs of scoring.

Shim
- Check the total dimension of the driving shaft-shoulder-gear assembly.

Standard thickness: 71.804 - 72.000 mm

- Make sure that the shim is not scored.

N.B.: If reused, maintain the original assembly position.

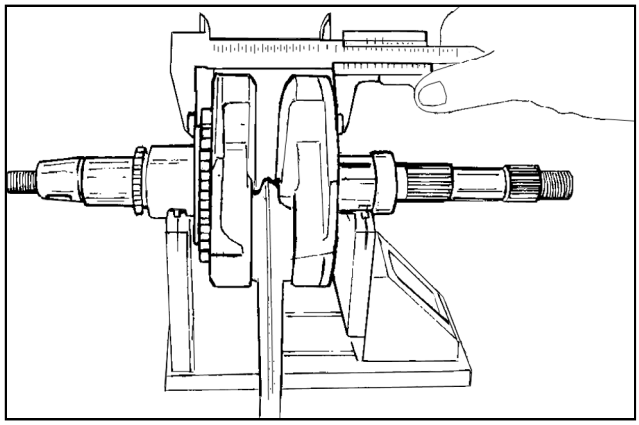

05_270

Specific tool:
Support for driving shaft control 020074Y

- If the driving shaft-crankcase end play exceeds the standard values but the driving shaft is not damaged, the trouble is certainly due to the wear or wrong machining of the engine crankcase.

- Check the diameter of both the driving shaft supports according to the axis and planes shown in the figure. The half shafts are subdivided in Class 1 and Class 2, as shown in the table below.

	Standard diameter
Class 1	40.010 - 40.016
Class 2	40.016 - 40.022

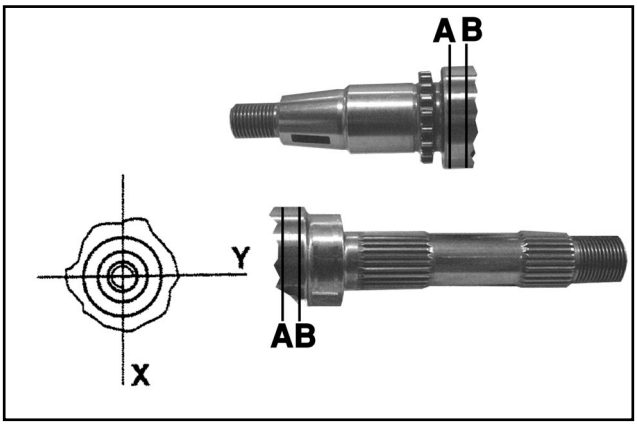

05_270_1

Driving shaft alignment check

- Assemble the driving shaft on the support. Measure the disalignment in the 4 points shown in the figure.

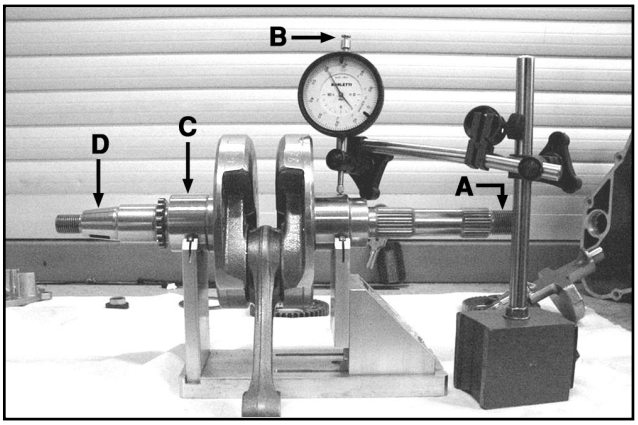

05_270_2

Specific tool:
Support for driving shaft control 020074Y

Max. out-of-line allowed: **A** = 0.15 mm
B = 0.01 mm
C = 0.01 mm
D = 0.10 mm

- Check the condition of the driving shaft cone, tange seat, oil seal housing, and the threading.
- If necessary, replace the driving shaft.

N.B.: The main bearings cannot be ground.

The connecting rod cannot be replaced. To check the connecting rod small end, see Chapter 7-Thermal Unit and Timing System.

- While cleannig the driving shaft, make sure that no dirt enters the shaft lubrication hole.

8

Warning - If the driving shaft made up of two half shafts of different classes is to be replaced, it is also necessary to replace the two half crankcases and to match the two components (shaft and crankcase) with the same class.

- Check the driving shaft gear according to the procedure described in Chapter 7-Thermal Unit and Timing System.

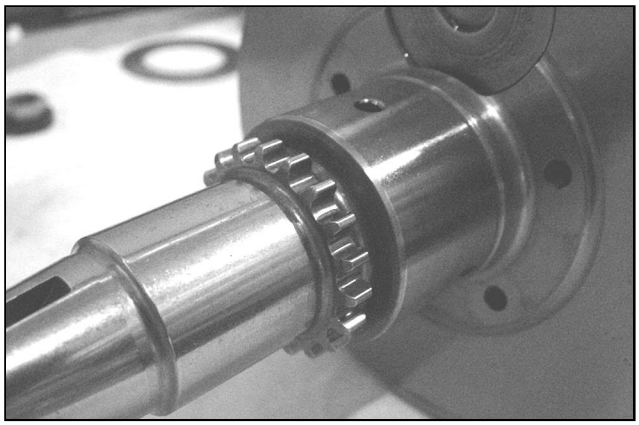

05_273

Engine half crankcase check

- Before checking the crankcases, carefully clean all the surfaces and lubrication ducts.
- For the half crankcase transmission side, act on the main bearing brass, cooling jet transmission side (see figure) and lubrication duct.

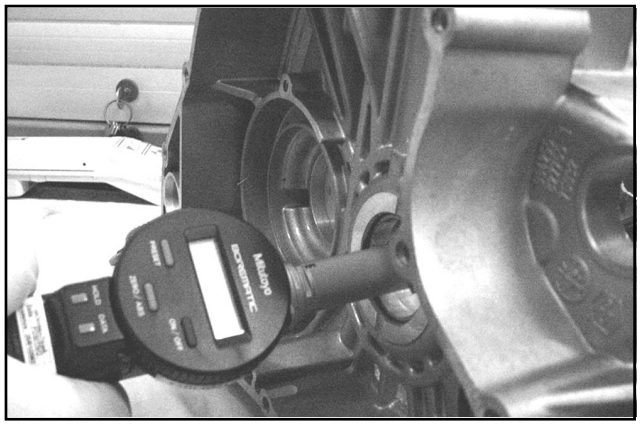

05_272

N.B.: The jet is fed through the main bearing brass. Correct operation of this component improves the piston crown cooling. Its clogging will cause troubles that are difficult to notice (piston temperature increase). Failure of this component may drastically reduce the lubrication pressure to the main bearing brass and connecting rod.

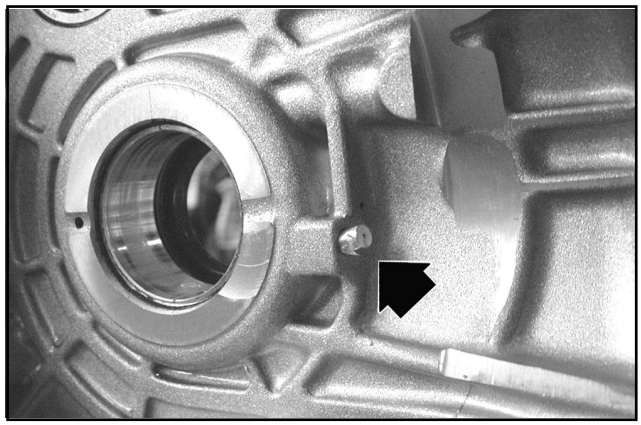

05_274

- For the half crankcase flywheel side, pay special attention to the lubrication ducts to the main bearing brasses, oil pump compartment and channels, and by-pass duct situated on the flywheel cover.

N.B.: As already described in Chapter 10-Lubrication, it is very important that the by-pass housing on the flywheel cover shows no signs of wear that would compromise the sealing of the lubrication pressure adjusting piston. The head lubrication duct is provided with a choking jet, that provides for a head lubrication of the “low pressure” type. This is to reduce the oil temperature in the pan.
The jet clogging will prejudice the lubrication to the head and timing system mechanism.
The jet failure will reduce the lubrication pressure to the main bearing brasses and connecting rod.

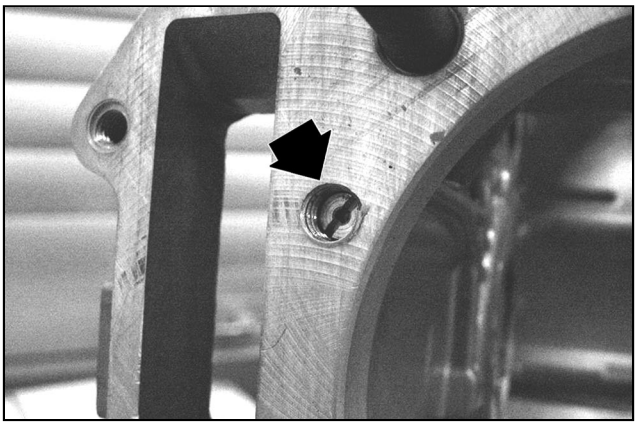

05_275

- Check that the surfaces show no signs of dents or deformation, especially on the cylinder-crankcase surface and crankcase coupling area.
- A defective gasket and crankcase coupling surface (see flywheel cover coupling) may cause leaks of the oil under pressure, thus compromising the lubrication pressure to the main bearing brasses and connecting rod.
- Check that the driving shaft end play containment surfaces show no signs of wear. Check the dimensions according to the procedures described for the end play check and driving shaft dimensions.

Main bearing brass check

- A good lubrication of the bearing brasses is achieved with a good lubrication pressure (4 bar) and good oil flow rate. To this purpose, the bearing brasses must be positioned correctly to avoid the oil supply ducts choking.
- The main bearing brasses are obtained with 2 half bearings, 1 full and 1 with holes and openings for the lubrication.
- The full half bearing supports the thrusts produced by the combustion, therefore it is positioned opposite to the cylinder.
- To avoid the oil supply ducts choking, the coupling surface of the two half bearings must be perfectly orthogonal with the cylinder axis, as shown in the figure.
- The oil supply channels square measure is also affected by the brass driving depth respect to the driving shaft end play containment surface.

N.B.: To maintain the brass position on the crankcase, the driving is forced on cast iron rings that are fitted in the casting of both half crankcases.

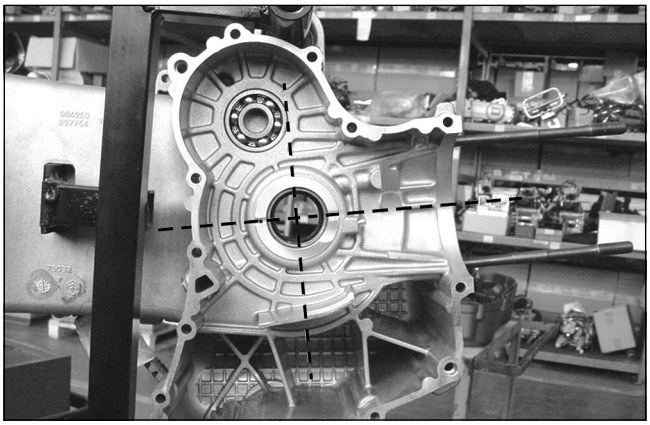

05_276

8

- Check the brasses diameter in the 3 directions shown in the figure.
- Repeat the measuring on the other half of the brass. See figure.

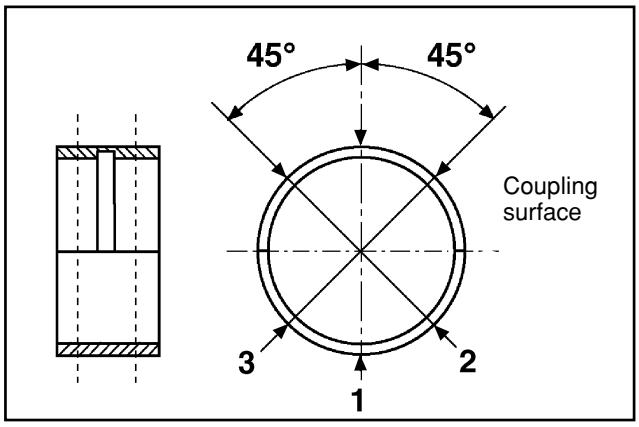

05_277

N.B.: Do not measure the mating of the 2 half bearings as the ends are splined to allow deformation while being fitted

- The brasses standard diameter after the driving changes according to the coupling selected.
- The brasses housing in the crankcases are subdivided in 2 classes, as for the driving shaft Class 1 and Class 2.
- The brasses are subdvided in 3 classes depending on the thickness, see table below:

TYPE	IDENTIFICATION	THICKNESS
A	Red	1.982 - 1.987
B	Blue	1.987 - 1.992
C	Yellow	1.992 - 1.997

Half shafts coupling with half crankcase and brass

Half shaft Class	Half shaft Class	Brass class	Spare crankcase preparation
1	1	B	FC1 Drg. CM1033015001
	2	C	
2	1	A	FC2 Drg. CM1033015002
	2	B	

N.B.: When assembling the spare parts, use the shaft with two shoulders class 1 with crankcase FC1 (or class 2 with crankcase FC2).
A spare crankcase cannot be used with a mixed class driving shaft. The shaft for the spare parts is provided with half shafts of the same class.

N.B.: To replace the half crankcases, remove the countershaft bearings as described above. Remove from the half crankcase, transmission side, the antiflapping roller and the driven pulley assembly, as described in Chapter 3-Automatic transmission, and the hub cover with relevant gears and bearings, as described in Chapter 4-Final Reduction.

Oil pump

- Overhaul the oil pump as described in Chapter 10-Lubrication.

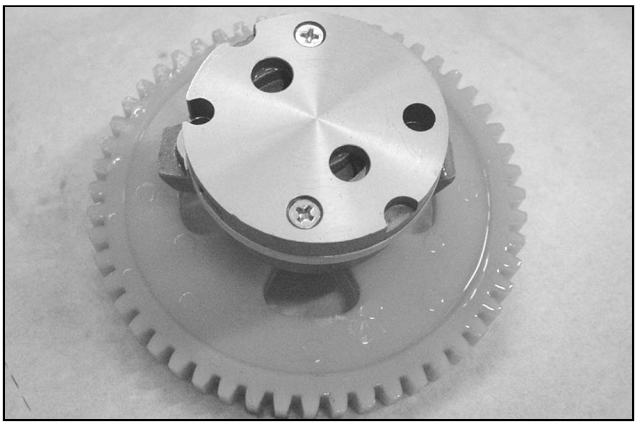

05_278

Countershaft

- Measure the 2 countershaft supports by means of a micrometer, as shown in the figure.

Standard diameter: $17^{-0.01}_{-0.02}$ mm

- Check that the water pump drive shows no signs of wear.

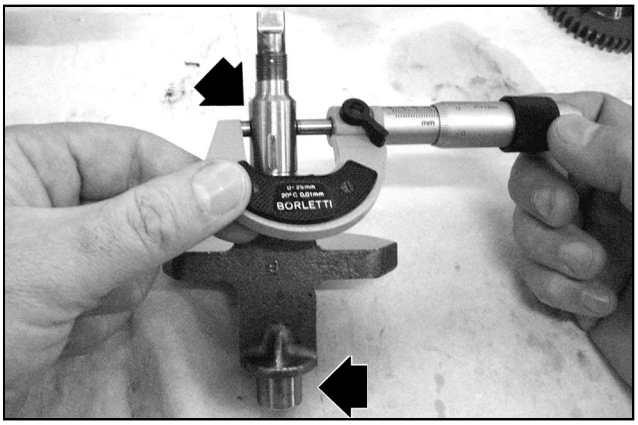

05_279

Oil pump assembly

- Check the gasket correct position.

N.B.: The gasket tooth must be positioned in the relevant seat.

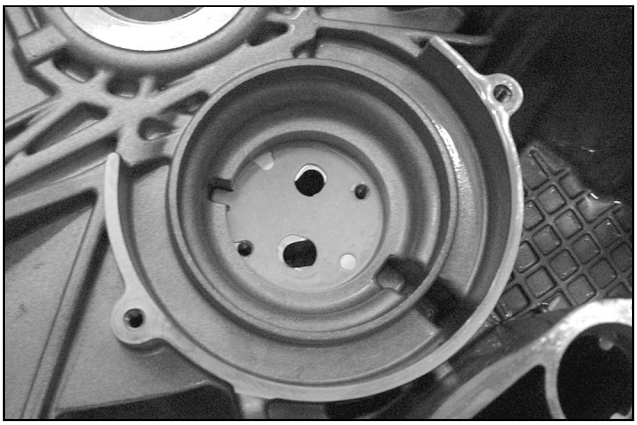

05_260

- Assemble the oil pump complete with the gear.
- Fit the 2 fixing screws through the slots on the gear and then tighten them to the prescribed torque.

N.B.: The pump assembly position is determined by the screws. Failure to observe the tightening torque may change the rotors to pump casing allowance.

Tightening torque:
Oil pump fixing screws: 5 - 6 N·m

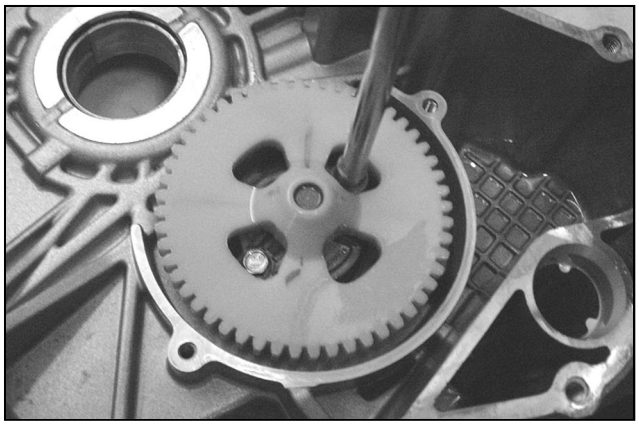

05_259

- Assemble the countershaft with the gear on the half crankcase flywheel side
- Fit the specific tool in the position shown in the figure

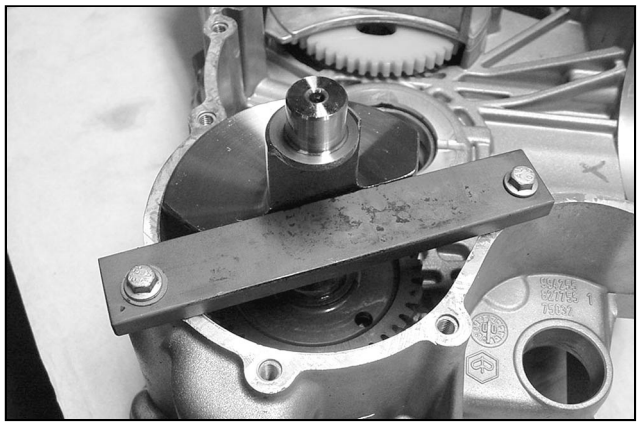

05_254

Specific tool:
Countershaft lock wrench 020479Y

- Hold the countershaft and fit the washer with nut
- Tighten the nut to the prescribed torque, apply LOCTITE 242
- Remove the specific tool.

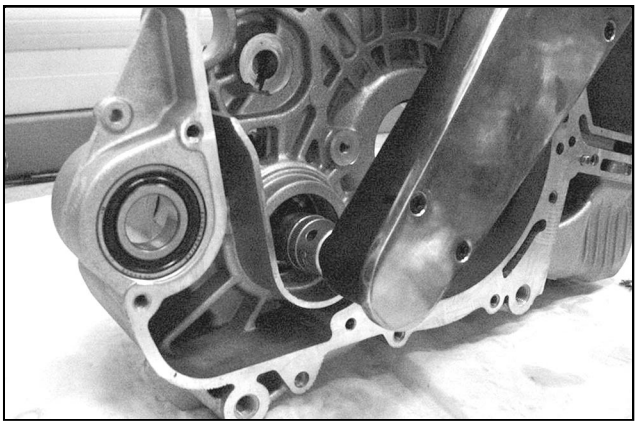

05_282

Tightening torque:
Countershaft fixing nut: 25 - 29 N·m

Driving shaft assembly

- Check that the countershaft control gear and the oil pump show no signs of dents or deformation. Replace if necessary.

N.B.: If the countershaft control gear and the oil pump are to be replaced, also replace the countershaft gear.

- Before assembling the gear on the driving shaft, carefully clean the two coupling surfaces by removing any residuals of LOCTITE from the holes by means of a brush.
  Blow compressed air and degrease the fixing holes on both surfaces to improve the new LOCTITE setting.
  Apply LOCTITE 242 again.

- Repeat the same procedure for the 4 fixing screws.
- Fit the control gear on the driving shaft with the holes countersink well visible.
- Tighten the 4 fixing screws to the prescribed torque.

N.B.: In order not to damage the screws control hexagon, use a socket wrench with inner hexagon.

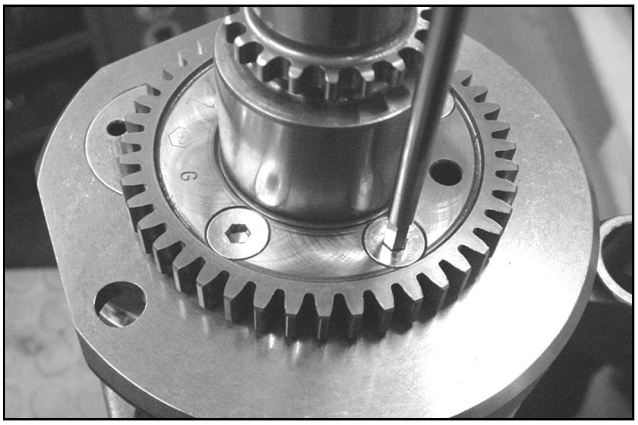

05_283

Tightening torque:
Driving shaft gear fixing screws: 10 - 12 N·m

- Lubricate the main bearing brass on the half crankcase flywheel side.
- Grease the shim washer
- Fit the shim washer on the driving shaft, in its original position
- Insert the specific tool for the timing in the hole on the countershaft

Specific tool:
Countershaft timing pin 020471Y

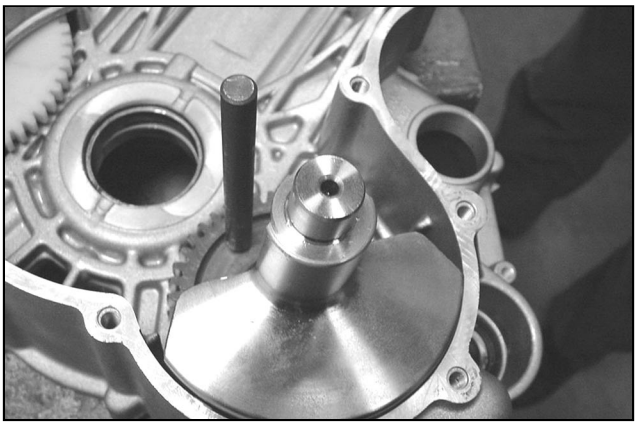

05_284

- Assemble the driving shaft on the pin. Further insert it in the brass very carefully.
- Before completing the assembly, fit the oil pump gear with the control gear.
- Complete the assembly and remove the specific tool.

N.B.: While assembling the shaft on the half crankcase, take care not to damage the main bearing brass with the threaded tang of the driving shaft and with the timing control toothed pinion.

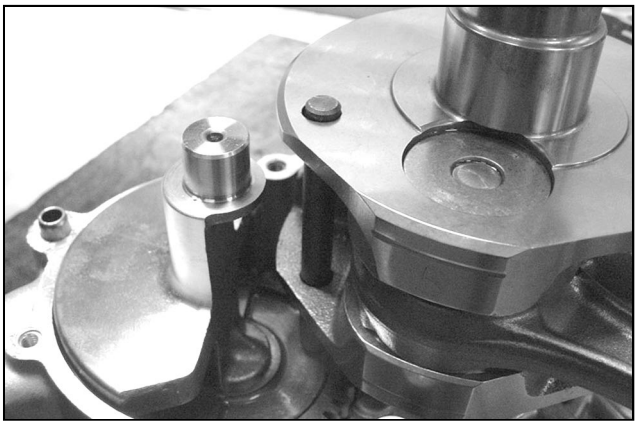

05_285

- Assemble the oil pump compartment gate.
- Tighten the 2 flanged fixing screws to the prescribed torque.

Tightening torque
Gate fixing screws: 8 - 10 N·m

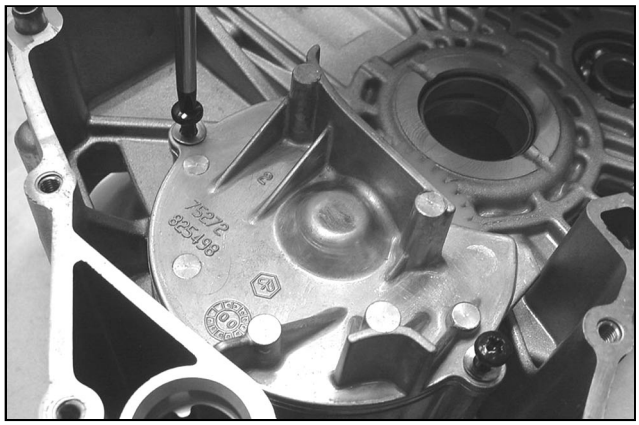

05_280

Crankcase coupling

- Remove the oil seal on the half crankcase transmission side by means of a screwdriver

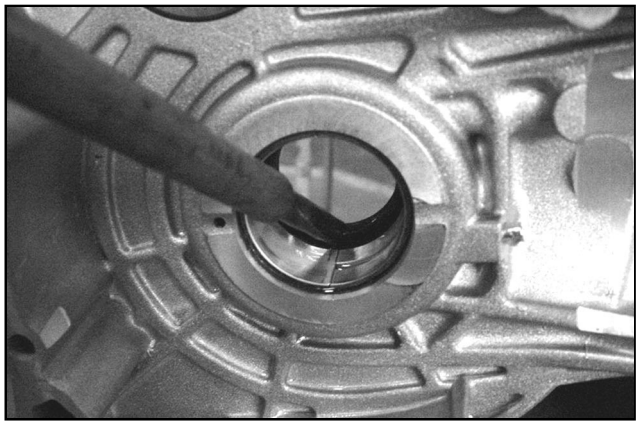

05_286

8

- Grease and assemble a new oil seal by means of the specific tool. Put it at 0.5 mm from the crankcase surface.

Warning - The oil seal wrong position will compromise the lubrication oil circulation.

Specific tool:

Adapter 52x55	**020360Y**
Punch handle	**020376Y**

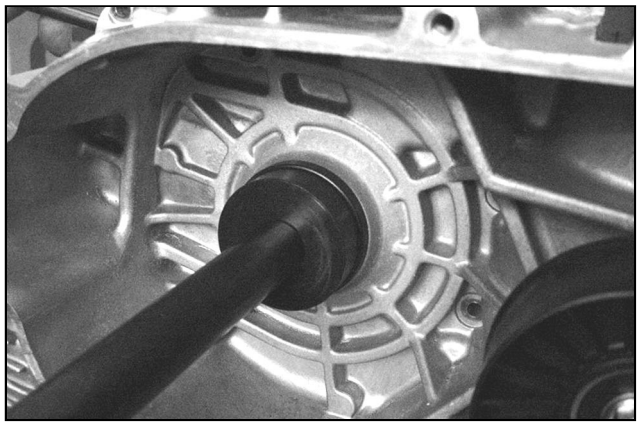

05_287

- Assemble the gasket on the half crankcase flywheel side

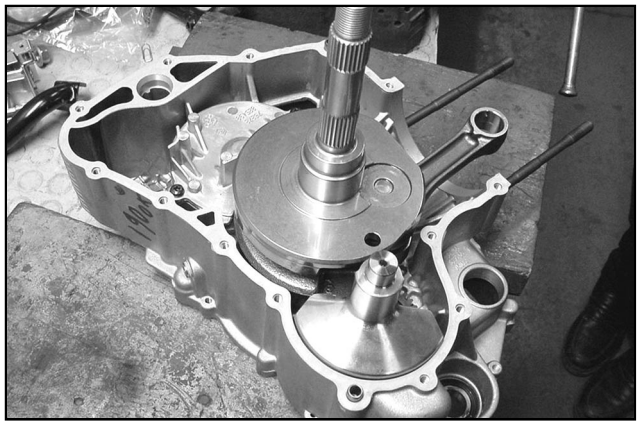

05_288

- Lubricate the main bearing brass on the half crankcase transmission side.
- **Mate the 2 half crankcases taking care not to damage the half crankcase brass transmission side, with the driving shaft threaded tang.**
- Insert, without locking it, the engine mount setscrew on the half crankcase flywheel side.
- Fit the 14 fixing screws, using the shorter screw **«A»** and the longer screws **«B»**, as shown in the figure.
- Fully screw the screws and then tighten them to the prescribed torque.
- Check that the driving shaft turns freely.

N.B.: Remove any part in excess from the crankcase coupling gasket on the cylinder surface in order to improve the sealing.

Tightening torque:
Crankcase coupling screws: 11 - 13 N·m

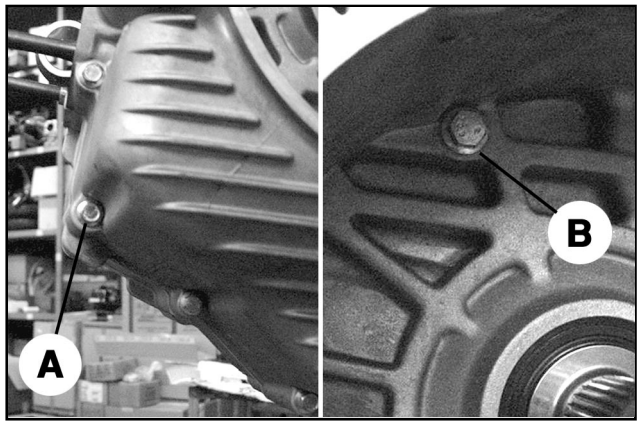

05_289

- Assemble the thermal unit (cylinder, head, piston) as described in Chapter 7-Thermal unit and Timing system.

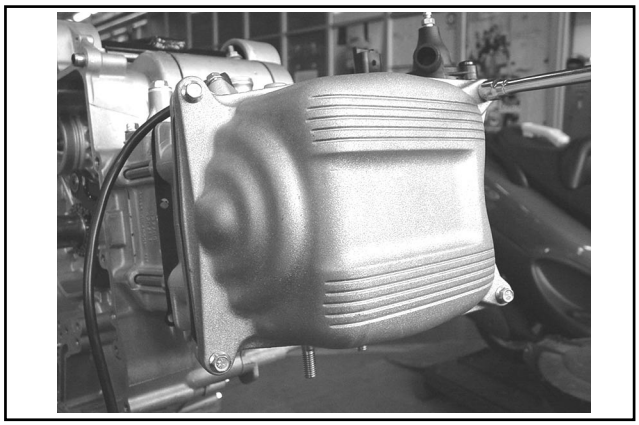

05_156

- Assemble the magneto flywheel with starting control as described in Chapter 6-Flywheel and Starting system.

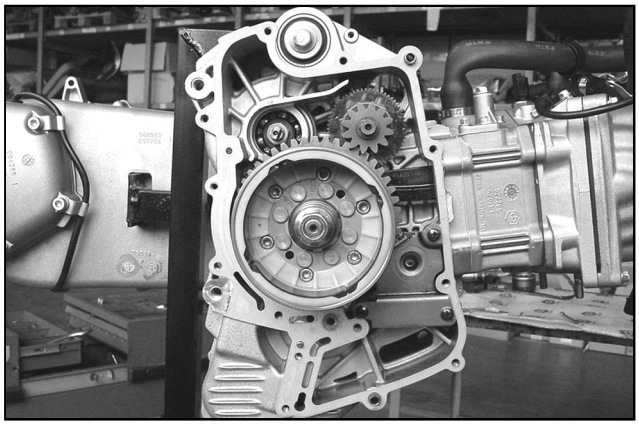

05_246

- Assemble the flywheel cover with the cooling system sleeves as described in Chapter 5-Flywheel cover.

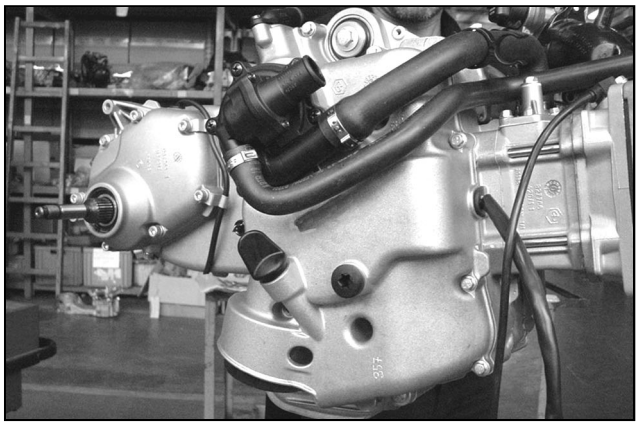

05_245

- Assemble the driving pulley assembly, transmission cover complete with net filter and the external transmission cover as described in Chapter 3-Automatic transmission.

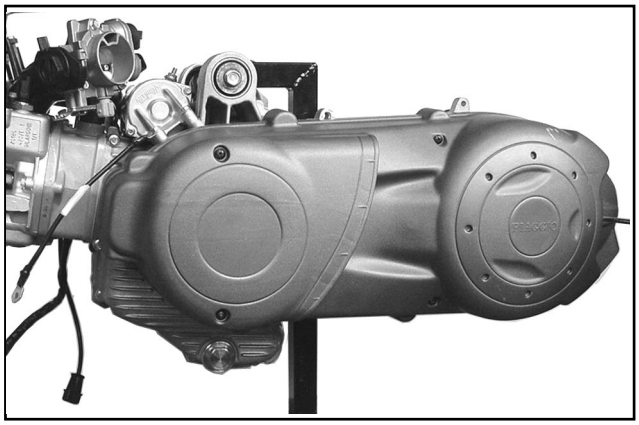

05_006

TABLE OF CONTENTS

FUEL INJECTION 9

INDEX

INTRODUCTION 9-3
PRECAUTIONS 9-5
TROUBLESHOOTING. 9-6
COMPONENTS LAYOUT 9-7
LAYOUT OF THE EMS CONTROL UNIT TERMINALS AND IMMOBILIZER 9-8
EMS SYSTEM DIAGRAM 9-9
FAULT SEARCH PROCEDURES 9-10
IMMOBILIZER SYSTEM 9-16
Non programmed system 9-17
SYstem programming 9-18
Diagnostic codes 9-20
Diagnostics guide of anomalies not revealed through self-diagnostics 9-23
FEED CIRCUIT OF THE DECODER AND THE FUEL INJECTION CONTROL UNIT 9-27
Constant feed circuit control 9-27
Feed circuit control derived from the key switch 9-30
DIAGNOSIS TESTER LINK CIRCUIT 9-34
FUEL INJECTION INDICATOR CIRCUIT 9-36
SELF-DIAGNOSIS SYSTEM 9-38
FUEL SUPPLY SYSTEM 9-39
General details 9-39
Pump feed circuit 9-40
Circuit control 9-41
Hydraulics control and system maintenance 9-46
Pressure regulator control 9-47
Fuel filter and pump control 9-49
Pump electrical controls 9-53
Pump support overhaul 9-54
Injector circuit control 9-58
Injector hydraulics control 9-62
REVOLUTIONS SENSOR 9-64
H.V. COIL 9-68
IGNITION TIMING 9-72
COOLANT TEMPERATURE SENSOR 9-74
AIR INTAKE TEMPERATURE SENSOR 9-78
PRESSURE SENSOR 9-82
T.P.S.=THROTTLE POSITION SENSOR 9-83
T.P.S. RESET 9-87
STEPPER MOTOR 9-89
IDLING CARBURATION REGULATION 9-95
CATALYST EFFICIENCY 9-98
ELECTRICAL FAN COMMAND CIRCUIT 9-99
REVOLUTIONS COUNTER COMMAND CIRCUIT 9-104

INTRODUCTION

EMS fuel injection system

The fuel injection system used is of the integrated fuel injection and ignition type.
Fuel is injected indirectly into the manifold by means of the electroinjector.
Fuel injection and ignition are timed on a 4-stroke cycle via a phonic wheel splined to the cam shaft control and a reluctance variance sensor.

Carburation and ignition are managed in relation to the engine revolutions and the opening of the throttle valve. Further corrections are carried out on the basis of the following parameters:
- Coolant temperature
- Air intake temperature
- Ambient pressure

The system carries out the idling supply correction on a cold engine via a stepper motor inserted on to a by-pass circuit of the throttle valve. The control unit manages the stepper motor and the timing of the injector opening, thus guaranteeing idling stability and correct carburation.
Under all working conditions, carburation is managed by modifying the injector opening time.
Fuel supply pressure is kept constant on the basis of ambient pressure.

The **feed circuit** is composed of:
- Fuel pump
- Fuel filter
- Injector
- Pressure regulator

The pump, filter and regulator are inserted into the fuel tank via a single support.
The injector is connected by means of two quick-connection tubes. This allows continuous circulation and avoids the risk of petrol overheating. The pressure regulator is situated at the end of the circuit. The fuel pump is commanded by the EMS control unit; thus guaranteeing vehicle safety.

The ignition circuit is composed of:
- H.V. coil
- H.V. cable
- Shielded cap
- EMS control unit
- Spark plug

The EMS control unit manages ignition with optimum advance, at the same time guaranteeing 4-stroke cycle timing (ignition only during compression stage).

The EMS igntion-injection system manages the working of the engine by means of a preset programme.
Should certain entry signals fail, an acceptable working of the engine is still guaranteed in order that the user may reach a repairs centre.

Obviously, this will not happen if the revolutions signal fails, nor if there is an anomaly in the control circuit:
- Fuel pump
- A.T.Coil
- Injector

The control unit has its own auto-diagnosis system connected to an indicator on the instrument panel.

Anomalies may be discovered and cancelled with a 020460Y diagnosis tester.

In any event, when the anomaly is no longer present, its memorization is automatically cancelled after 16 usage cycles (cold start, warm running, stopping).

The diagnosis tester is also indispensible for idling carburation regulation.

The EMS igntion-injection system carries out the function of revolution counter control and electrical fan control for cooling of the radiator.

The EMS control unit is connected to the decoder of the anti-theft immobilizer system.

The decoder is in turn connected to a diagnosis LED that also functions as a blinking deterrent light.

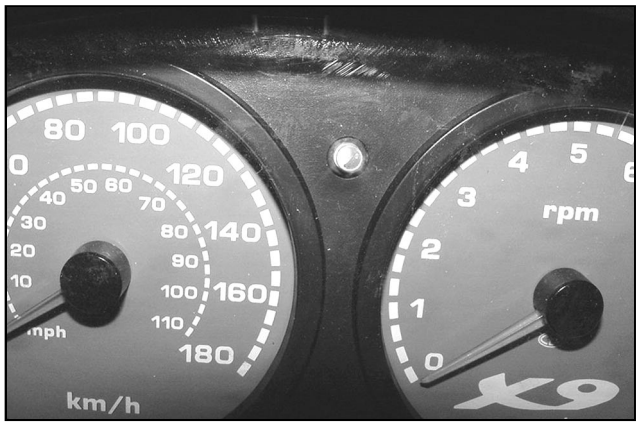

Feed of the EMS control unit is further controlled by the emergency switch and the side stand deviator; thus guaranteeing more vehicle safety.

PRECAUTIONS

1 - Before proceeding with any repairs concerning the fuel injection system, check for the presence of registered anomalies.
Do not disconnect the battery prior to checking the anomaly.

2 - The supply system is pressurized at 300 Kpa (3 BAR). Before disconnecting the quick-connection of a supply system tube, check that no open flames are present and do not smoke. Act with caution to avoid spraying into the eyes.

3 - During repairs on electrical components, the battery should remain connected only in cases of necessity.

4 - When carrying out functional controls, ensure that the battery tension is more than 12V.

5 - Before attempting to restart the engine, ensure that the tank holds at least two litres of petrol. Failure to respect this regulation could damage the fuel pump.

6 - If a long period of inactivity is foreseen for the vehicle, fill the fuel tank to more than half-full. This guarantees that the pump will remain immersed in the petrol.

7 - When washing the vehicle do not place pressure on the electrical components and cables.

8 - When ignition irregularities are revealed, begin controls by checking the battery and fuel injection system.

9 - Before disconnecting the EMS control unit connector, carry out the following operations in the order given:
- Set the ignition switch to “OFF”
- Disconnect the battery
Failure to respect this regulation may damage the control unit.

10 - When mounting the battery take care to not invert the polarity.

11 - So as not to cause damage, disconnect and reconnect the EMS system connectors only if it proves necessary. Before reconnecting, verify that the connections are not wet.

12 - During electrical controls do not forcefully insert the tester prods into the connectors. Do not take measurements which are not foreseen by the manual.

13 - At the end of each control carried out with the diagnosis tester, remember to protect the system connector with the appropriate cap.
Failure to respect this regulation could damage the EMS control unit.

14 - Before reconnecting the supply system quick-connections, verify that the terminals are perfectly clean.

TROUBLESHOOTING

Suggestions for troubleshooting

1 Damage to the EMS system could derive most probably from the connections and not from the components. Before carrying out a search on the EMS system, carry out the following controls:

1 Electrical feed
- Battery tension
- Burnt out fuse
- Electromagnetic switches
- Connectors

2 Frame earthed

3 Fuel supply
- Fuel pump broken
- Fuel filter dirty

4 Ignition system
- Spark plug faulty
- Coil broken
- Shielded cap broken

5 Air intake circuit
- Air filter dirty
- By-pass circuit dirty
- Stepper motor broken

6 Others
- Incorrect valve gear timing
- Idling carburation incorrect
- T.P.S reset sensor incorrect

2 Anomalies in the EMS system may derive from loose connectors. Ensure therefore that all connections are carried out correctly.

Check the connectors, paying attention to the following points:
1 check that the terminals are not bent.
2 check that the connectors are properly engaged.
3 check that poor functioning is modified by provoking a slight vibration of the connector.

3 Before replacing the EMS control unit check the entire system accurately.
If the anomaly disappears by replacing the EMS control unit, install the original control unit again to see if the anomaly returns.

4 For the fault search use a multimeter with an internal resistance of more than 10K/V.
Unsuitable instruments could damage the EMS control unit.
The recommended instruments are those with a definition superior to 0.1V and 0.5; precision must be superior to ±2%.

COMPONENTS LAYOUT

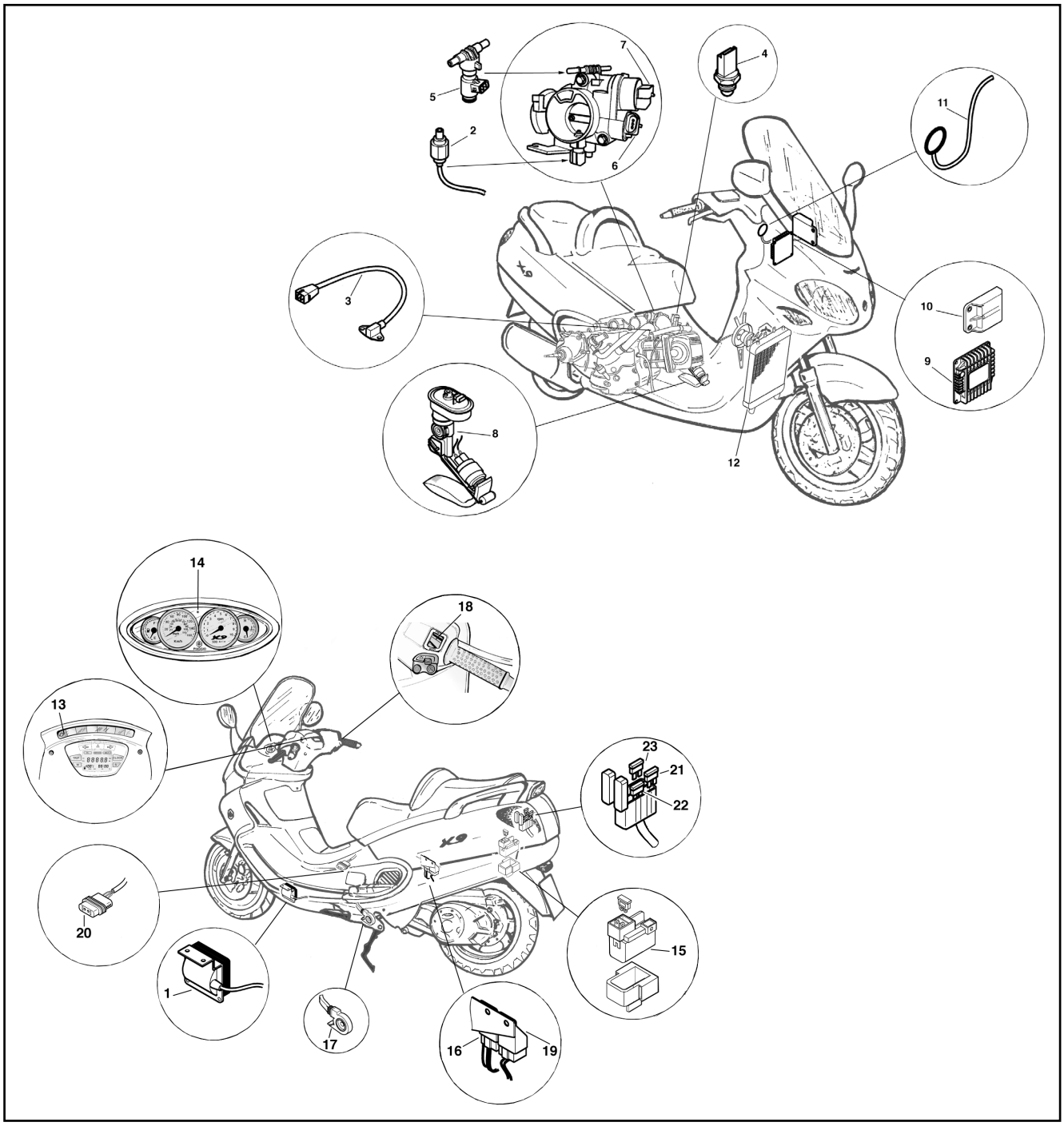

1 H.V. COIL	10 CONTROL UNIT DECODER	19 CONTROL UNIT CONTR. ELECTROMAGNETIC SWITCH
2 INJECTOR	11 AERIAL DECODER	20 EMS DIAGNOSIS SOCKET
3 ENGINE REVOLUTIONS SENSOR	12 ELECTRICAL FAN	21 5A N°4 FUSE
4 LIQUID TEMP. SENSOR	13 FUEL INJECTION INDICATOR	(FEED PANEL-LED-DECODER-EMS CONTROL UNIT)
5 AIR TEMP. SENSOR	14 IMMOBILIZER LED	22 3A N°3 FUSE
6 VALVE POS. SENSOR	15 ELECTROMAGNETIC SWITCH WITH FUSE (30A)	(FEED BASE DECODER-EMS CONTROL UNIT)
7 STEPPER MOTOR	16 ELECTROMAGNETIC SWITCH ENGINE STOP	23 10A N°2 FUSE
8 FUEL PUMP	17 DEVIATION STAND	(PUMP-INJECTOR- H.V. COIL)
9 EMS CONTROL UNIT	18 OFF-RUN SWITCH	

LAYOUT OF THE EMS CONTROL UNIT TERMINALS AND IMMOBILIZER

Representation of the control unit connector and the connector system side.

CONTROL UNIT SIDE	SYSTEM SIDE
	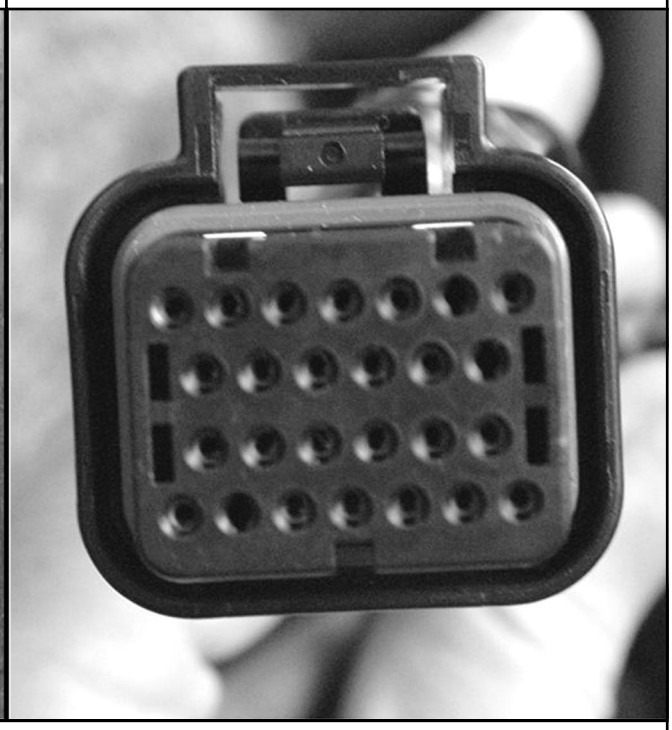

EMS CONTROL UNIT

N°	FUNCTION	N°	FUNCTION
1	THROTTLE POTENTIOMETER FEED (+5V)	14	STEPPER MOTOR
2	-	15	DIGITAL INSTRUMENT (FUEL INJECTION INDICATOR - NEGATIVE)
3	DIGITAL INSTRUMENT (REVOLUTIONS COUNTER CONTROL)	16	DECODER (SERIAL)
4	ENGINE TEMPERATURE (+)	17	BASE FEED (POSITIVE)
5	86 ELECTRICAL FAN ELECTROMAGNETIC SWITCH	18	AIR TEMPERATURE SENSOR (+)
6	ENGINE REVOLUTIONS SENSOR	19	85 ELECTROMAGNETIC SWITCH (PUMP-INJECTOR-H.V. COIL) (-)
7	EMS DIAGNOSIS CONNECTOR	20	H.V. COIL (NEGATIVE CONTROL)
8	-	21	STEPPER MOTOR
9	EMS DIAGNOSIS CONNECTOR	22	SENSORS FEED (-)
10	EMS DIAGNOSIS CONNECTOR	23	CONTROL UNIT NEGATIVE
11	THROTTLE POTENTIOMETER SIGNAL	24	STEPPER MOTOR
12	ENGINE REVOLUTIONS SENSOR	25	-
13	INJECTOR CONTROL (NEGATIVE)	26	UNDER PANEL FEED (POSITIVE)

DECODER

N°	FUNCTION
1	-
2	IMMOBILIZER LED CONTROL (NEGATIVE)
3	BASE FEED (POSITIVE)
4	NEGATIVE
5	-
6	EMS CONTROL UNIT (SERIAL)
7	-
8	UNDER PANEL FEED (POSITIVE)
	IMMOBILIZER AERIAL
	IMMOBILIZER AERIAL

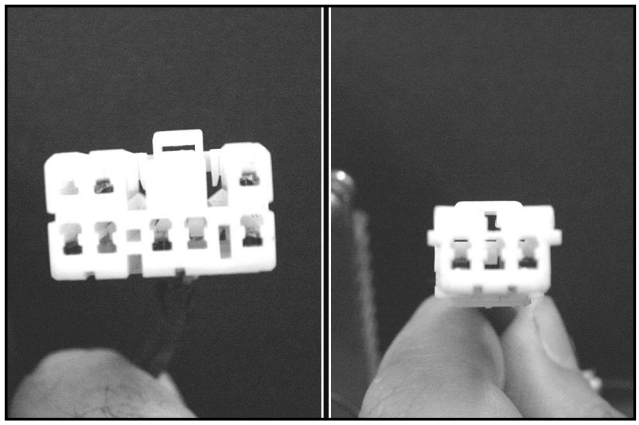

EMS SYSTEM DIAGRAM

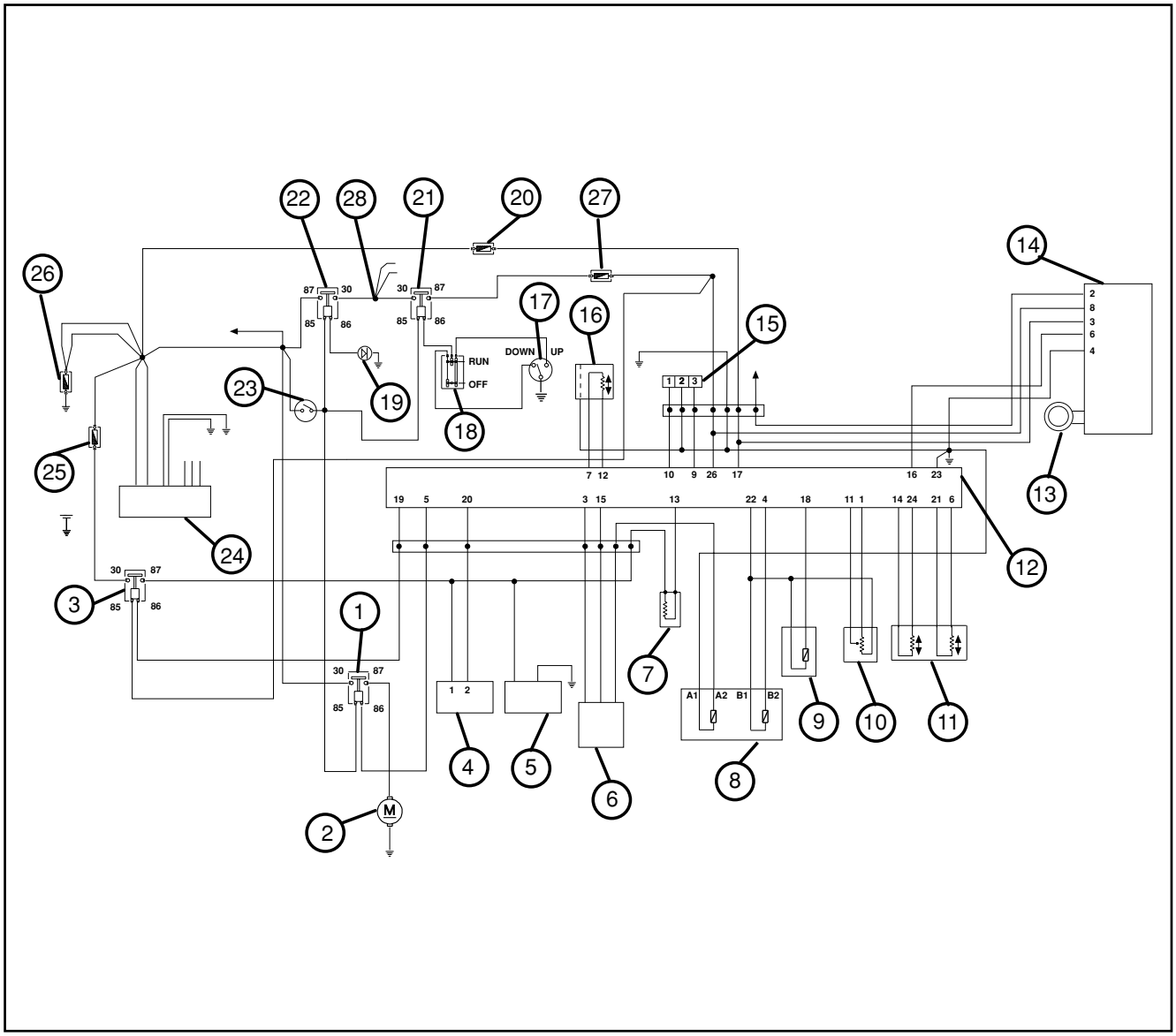

1) Electrical fan electromagnetic switch
2) Electrical fan
3) Electromagnetic switch
4) H.V. coil
5) Fuel pump
6) Digital instrument
7) Injector
8) Liquid temp. sensor
9) Air temp. sensor
10)Throttle potentiometer
11)Stepper motor
12)EMS control unit
13)Aerial
14)Decoder
15)EMS diagnosis socket
16)Phase revolutions sensor
17)Deviation stand
18)Emergency switch
19)2A diode
20)3A Fuse
21)Engine stop electromagnetic switch
22)Services electromagnetic switch
23)Key switch
24)Rectifier regulator
25)10A Fuse
26)30A Fuse
27)5A Fuse
28)Services

TROUBLESHOOTING

1) THE ENGINE DOES NOT START EVEN WITH NORMAL MOTORING OVER

Proceed with the following controls:

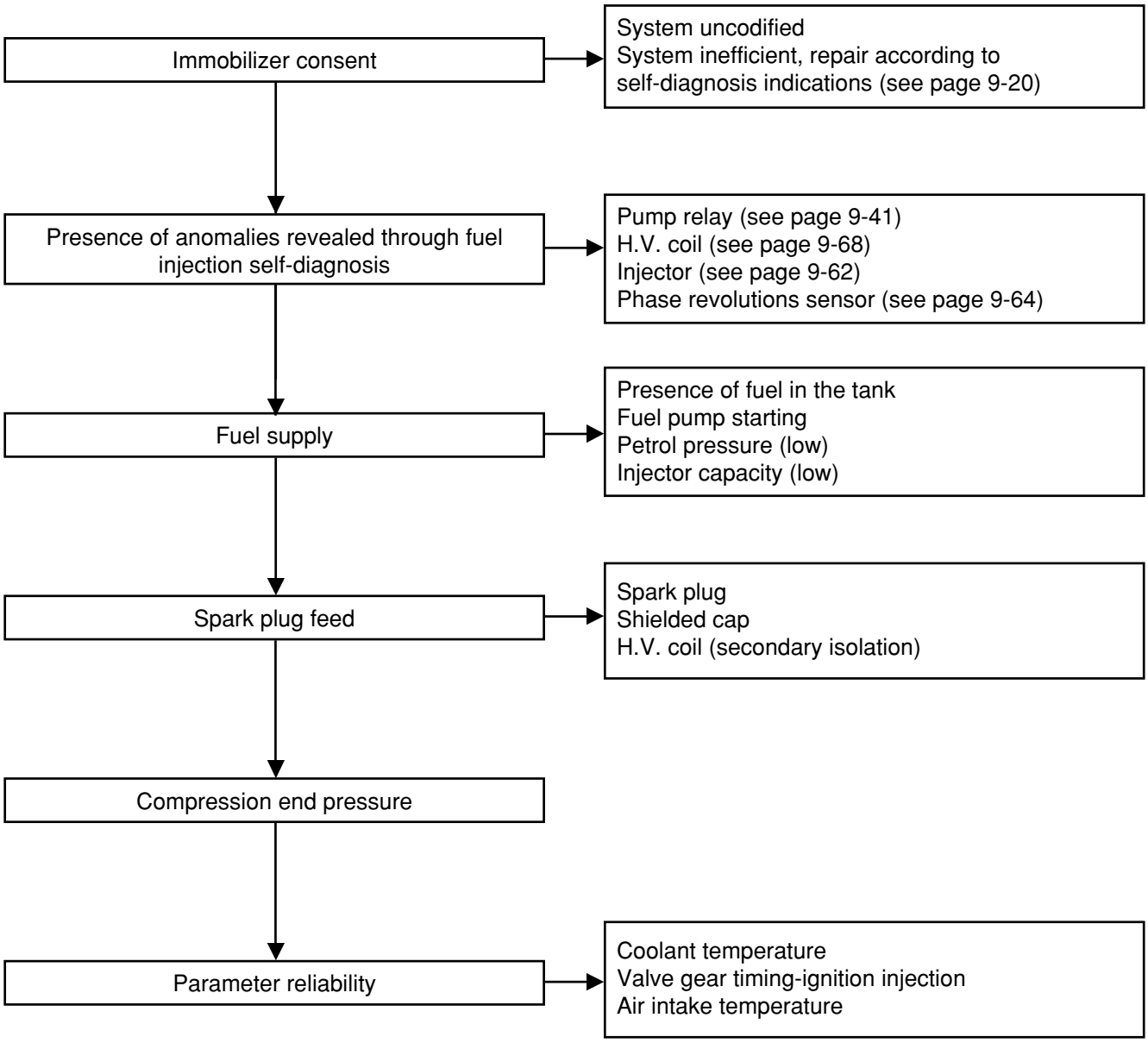

2) DIFFICULT COLD START OR WARM START OF THE ENGINE

Proceed with the following controls:

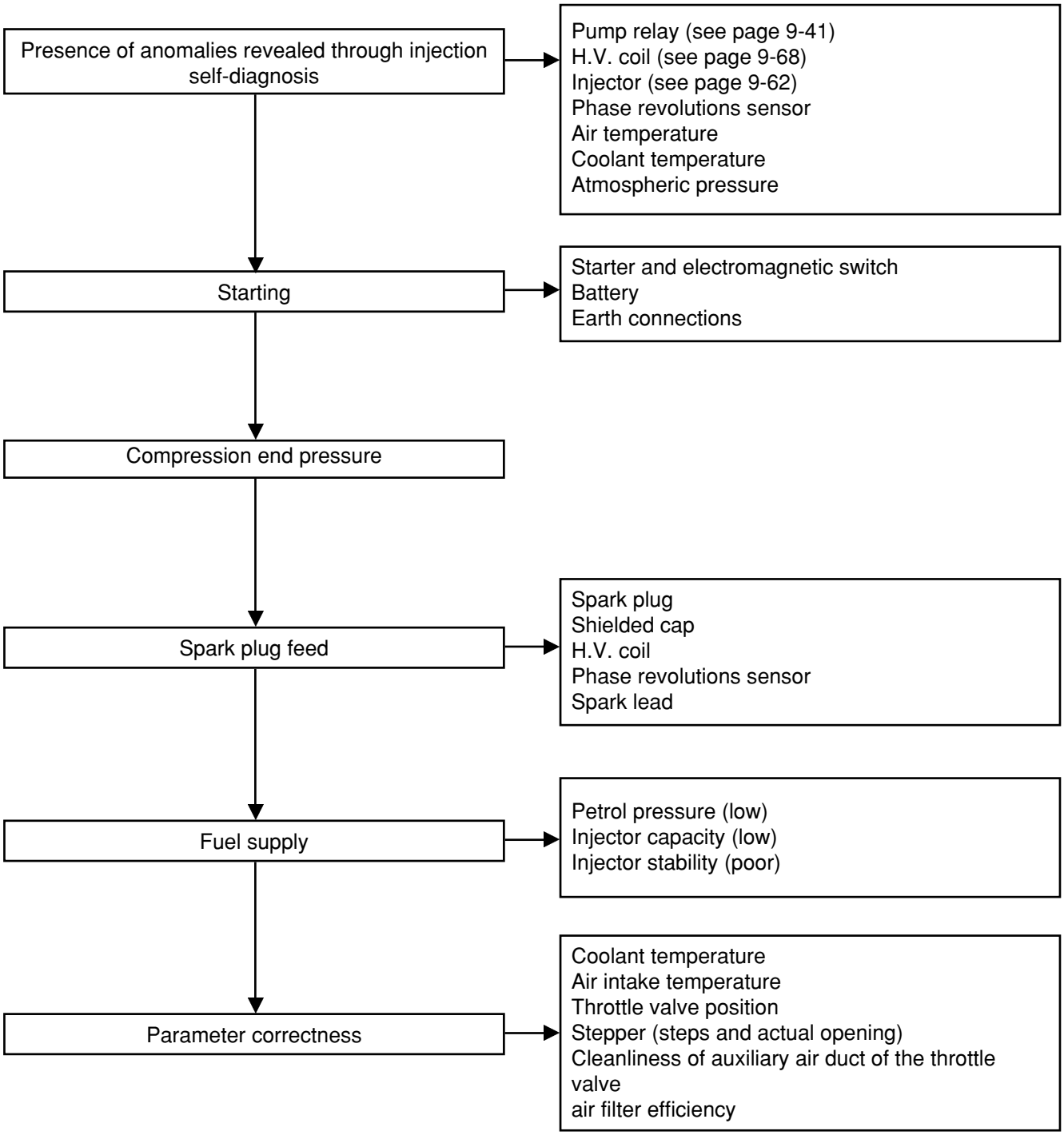

9

3) THE ENGINE DOES NOT MAINTAIN IDLING SPEED
IDLING SPEED IS UNSTABLE
IDLING SPEED IS TOO LOW

Proceed with the following controls:

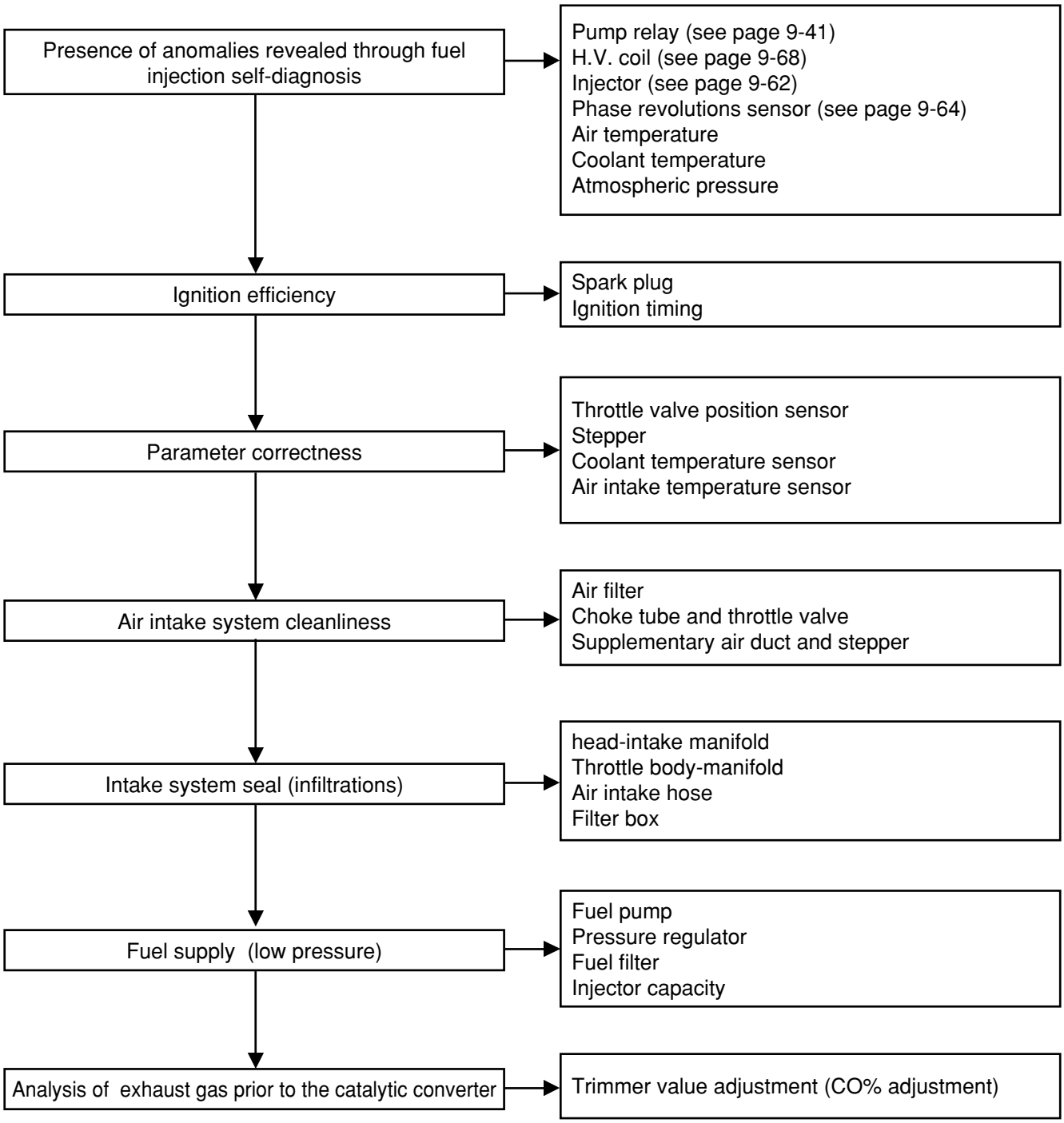

4) THE ENGINE DOES NOT TURN OVER ON IDLING SPEED IDLING SPEED TOO HIGH

Proceed with the following controls:

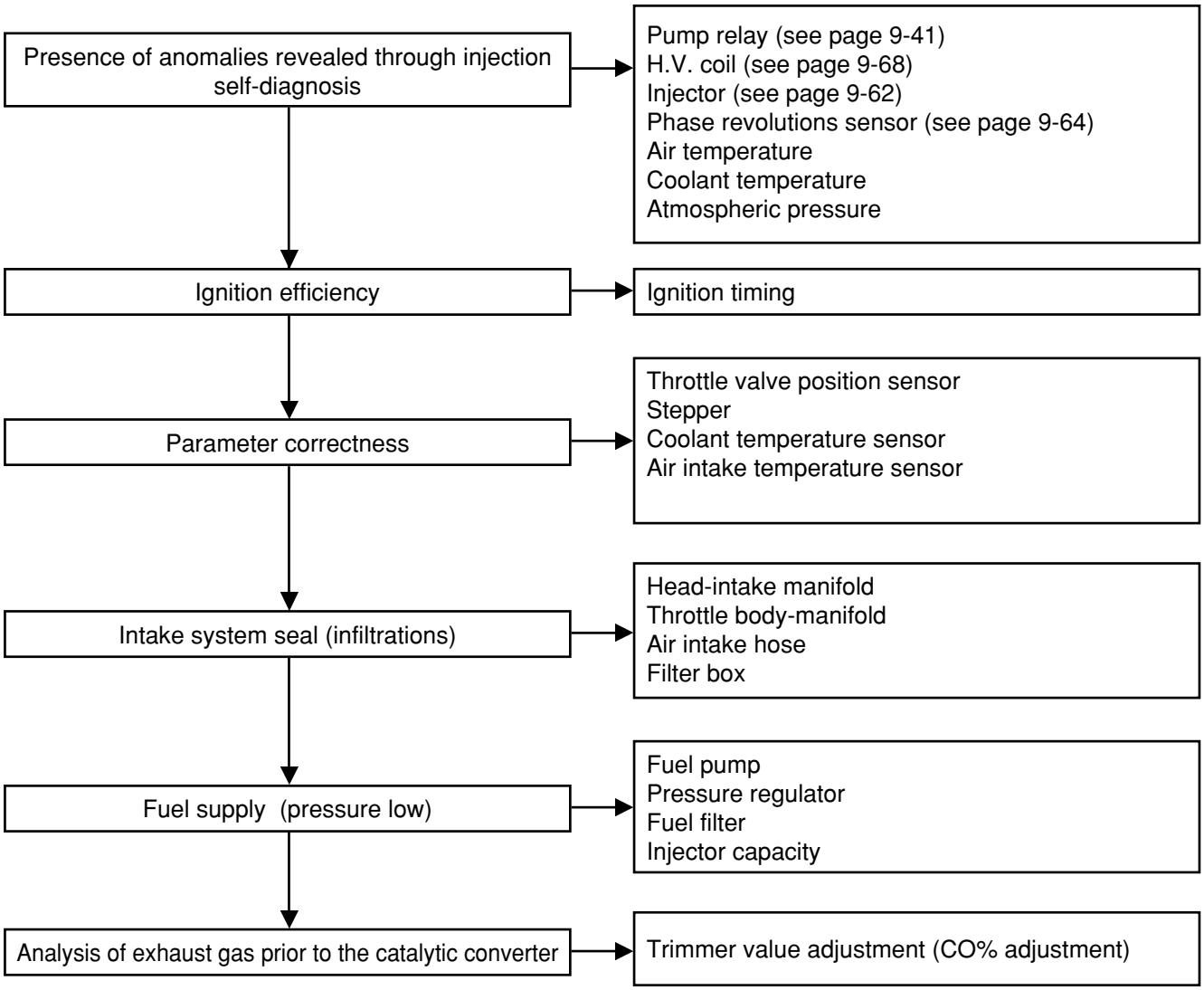

5) BACKFIRING IN DECELERATION

Proceed with the following controls:

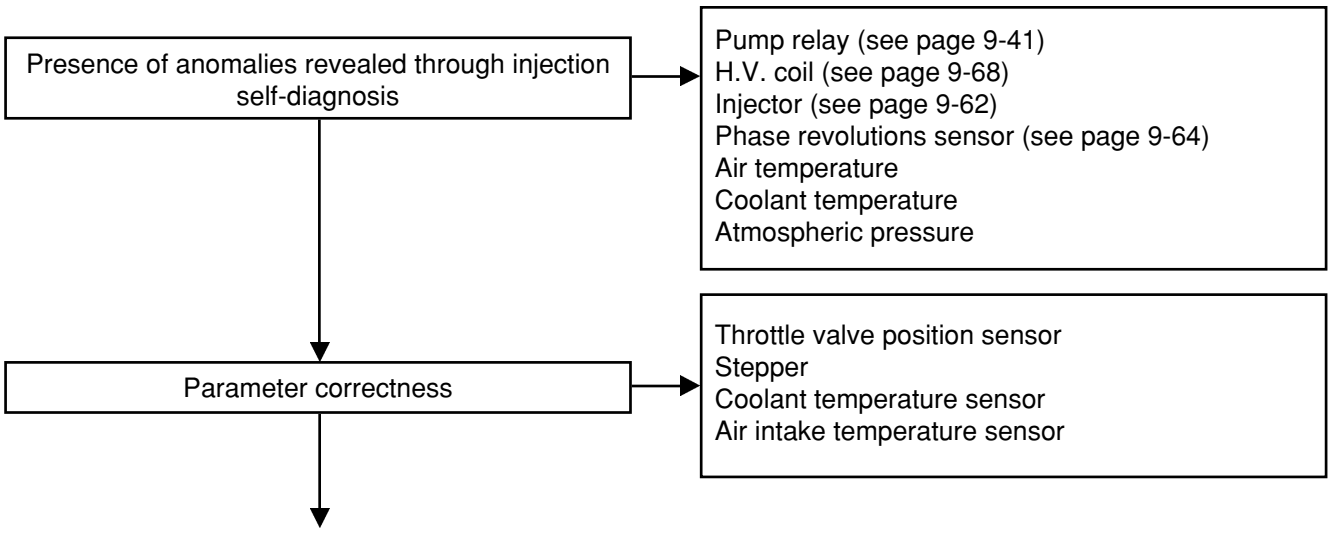

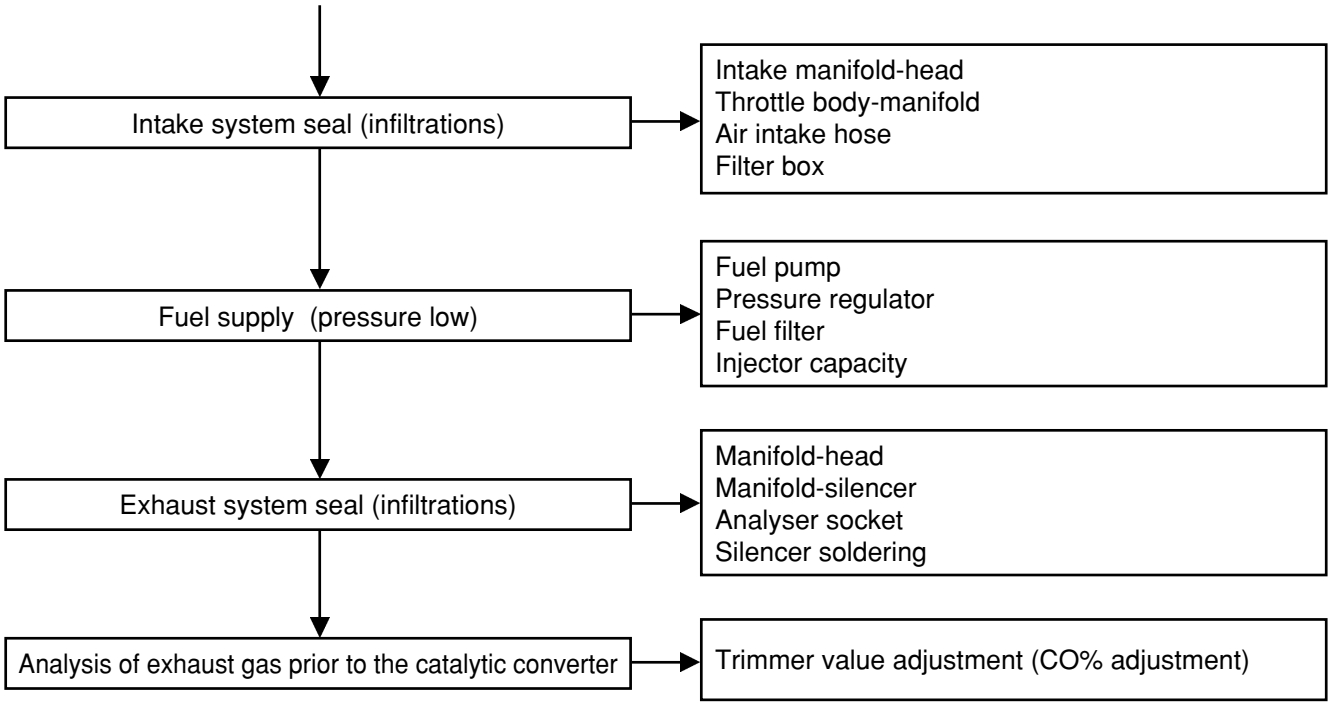

6) IRREGULAR RUNNING OF THE ENGINE WITH THROTTLE VALVE SLIGHTLY OPEN

Proceed with the following controls:

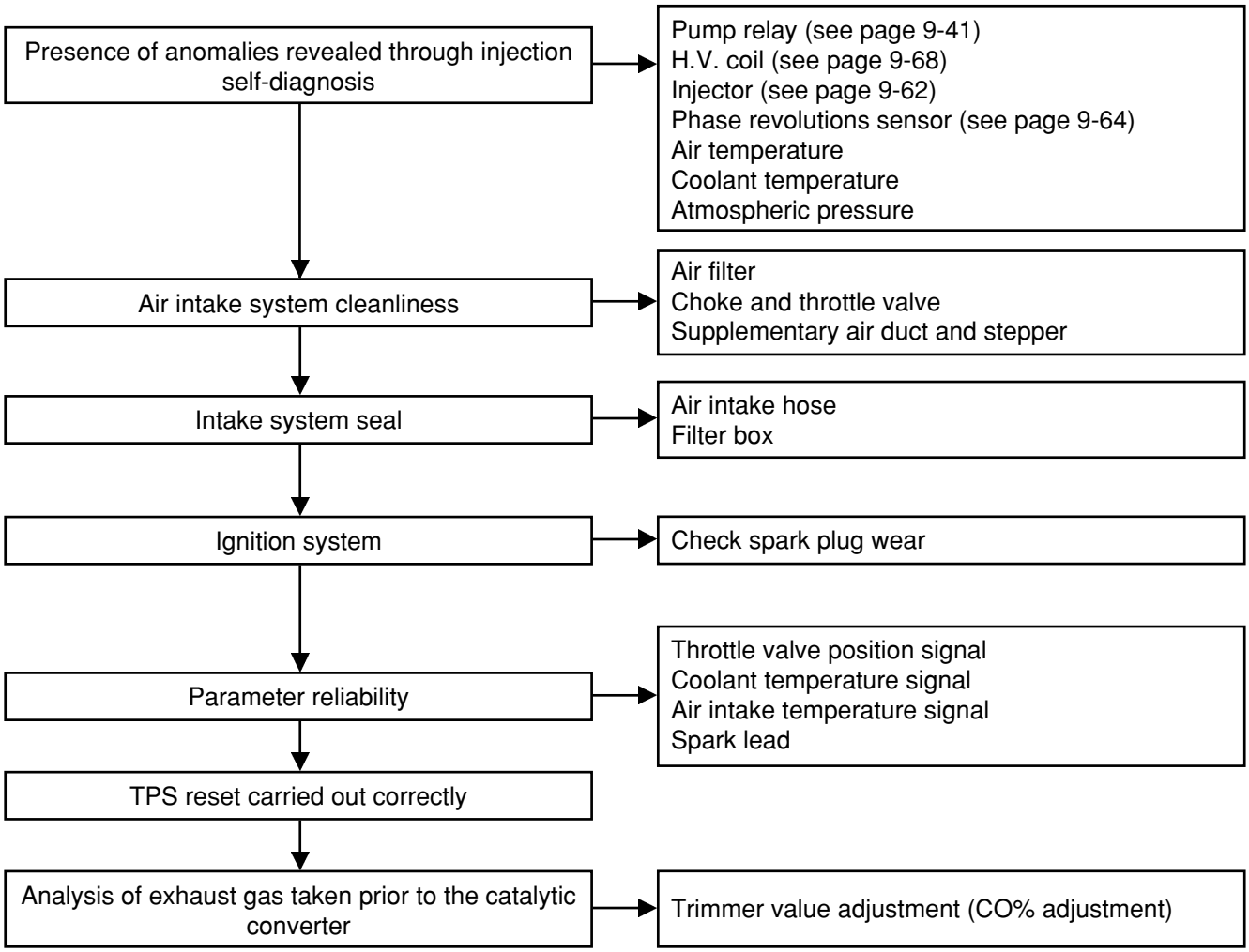

7) POOR ENGINE RUNNING ON FULL POWER IRREGULAR RUNNING OF THE ENGINE DURING ACCELERATION STAGE

Proceed with the following controls:

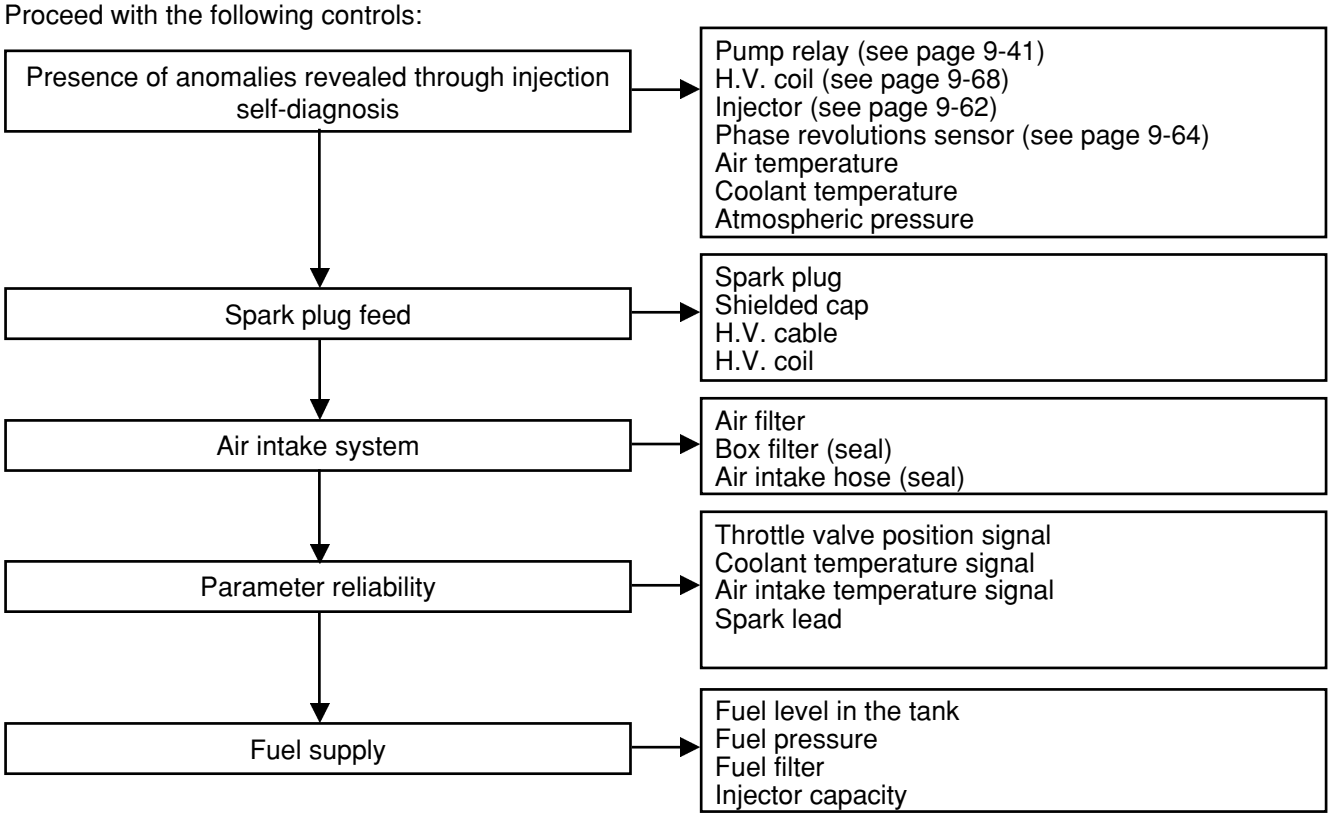

8) PRESENCE OF DETONATION (COMBUSTION SHOCK)

Proceed with the following controls:

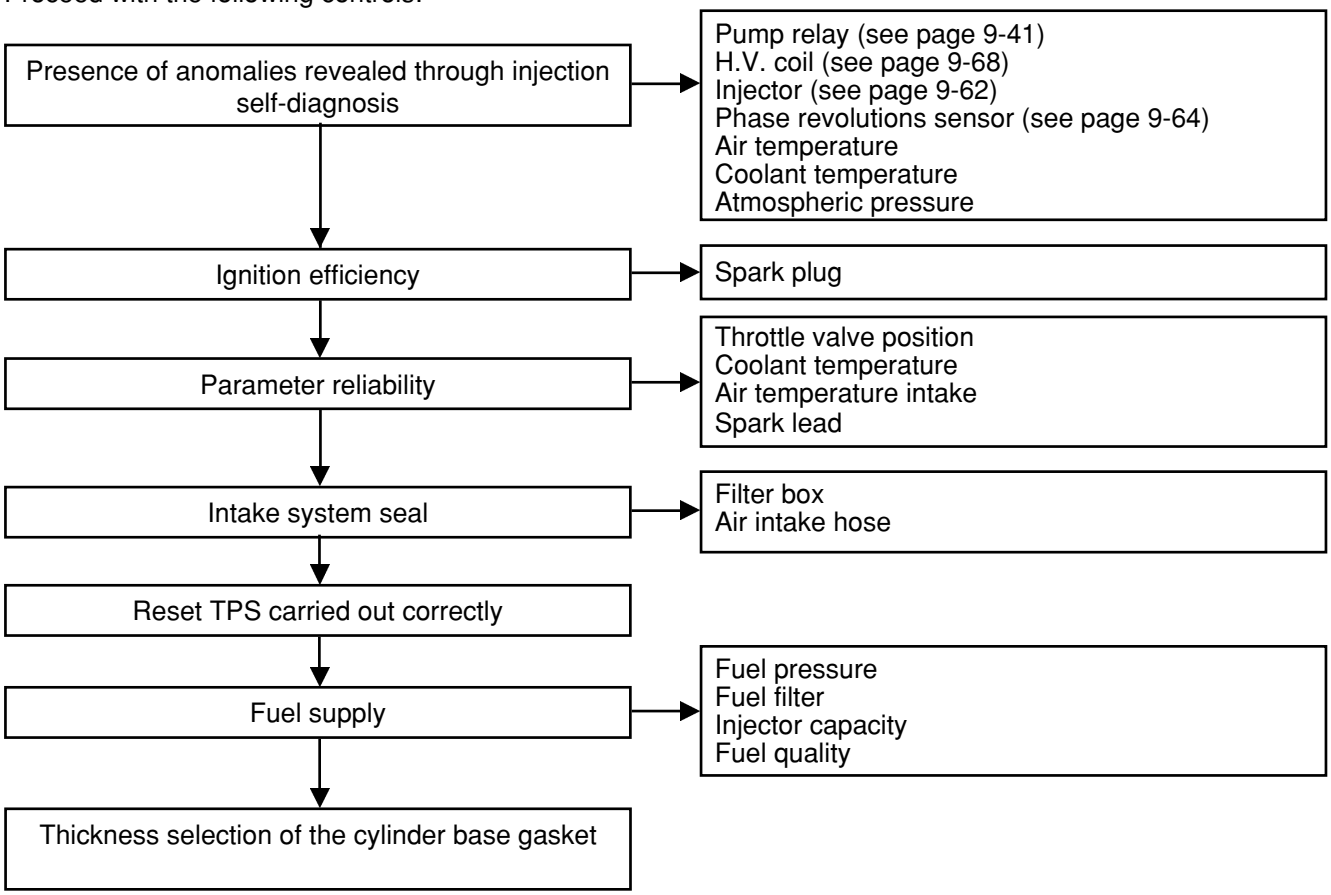

9

IMMOBILIZER SYSTEM

The EMS system is integrated with an immobilizer-type anti-theft device.
The functions achieved are:
- Starter initialization via key recognition
- Blinking deterrent light

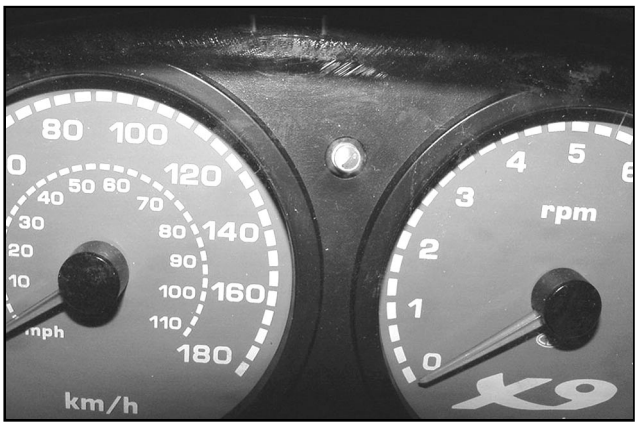

System components

The system is composed of:
- EMS system control unit
- decoder
- aerial
- master key (red)
- service key (black)
- diagnostic and deterrent LED

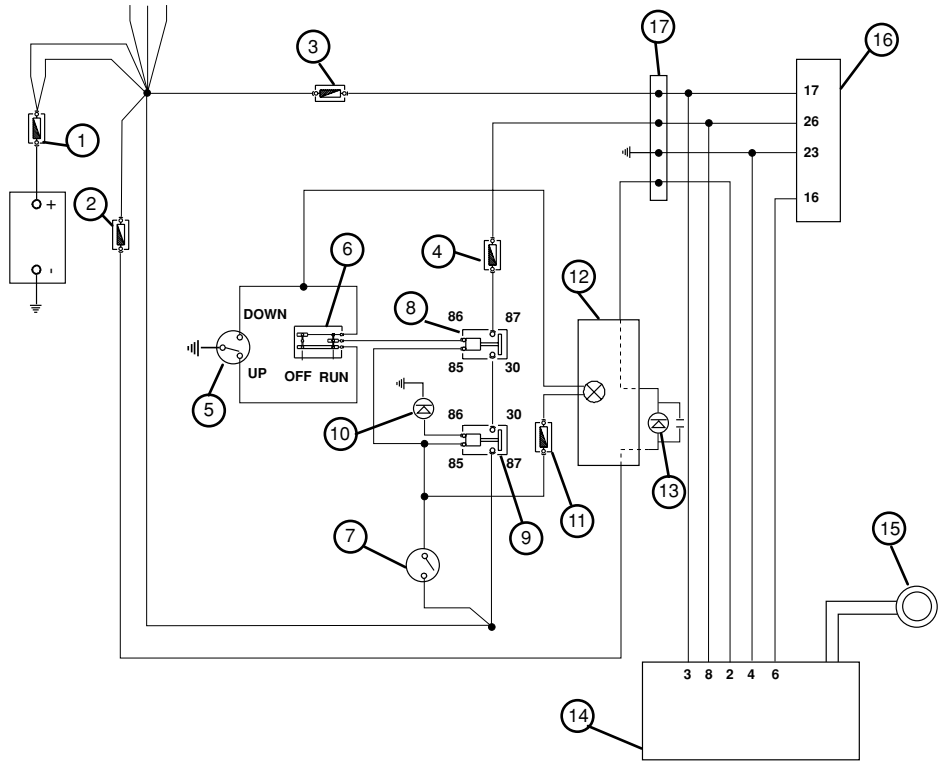

1	30A MAIN FUSE	10	DIODE
2	7.5A FUSE	11	7.5A FUSE
3	3A FUSE	12	DIGITAL INSTRUMENT
4	5A FUSE	13	IMMOBILIZ . LED
5	STAND SWITCH	14	DECODER
6	EMERGENCY SWITCH	15	AERIAL
7	KEY SWITCH	16	ECU CONTROL UNIT
8	STOP ELECTROMAGNETIC SWITCH	17	VEHICLE SYSTEM - INJECTION SYSTEM CONNECTOR
9	MAIN ELECTROMAGNETIC SWITCH		

Unprogrammed system

When the control unit (ECU) and the decoder are not programmed, the conditions described below occur:

- Key switch in “OFF” position. Blinking deterrent light inactive.

- Key switch in "ON" position. Ignition and fuel injection not activated and LED fixed light on.

When the key switch is set to "ON", the LED is lit as indicated in the diagram.

The LED lighting is commanded by the decoder.
It is possible to check the information present in the control unit using a diagnosis tester 020460Y.

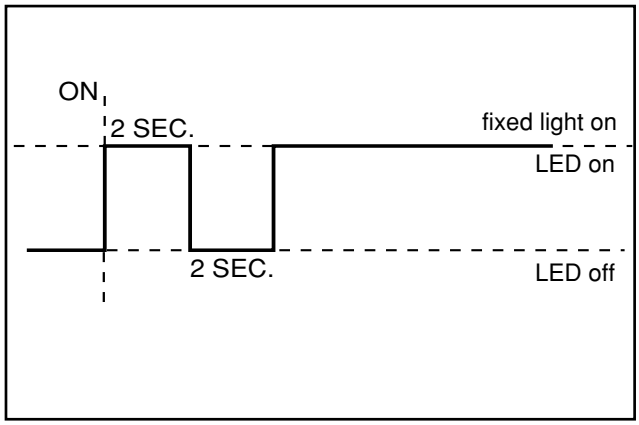

To connect the diagnosis tester, open the spark plug inspection door and pull out the EMS diagnosis socket. Remove the protection cap and connect the tester terminals.

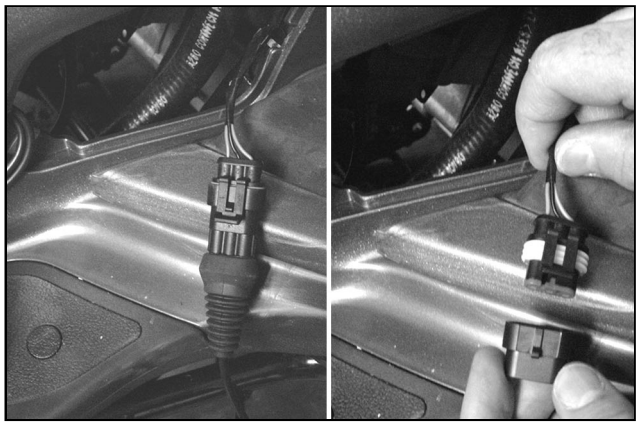

Feed the diagnosis tester by connecting the clamps to the battery poles or the specific connector to the internal socket of the glove compartment.

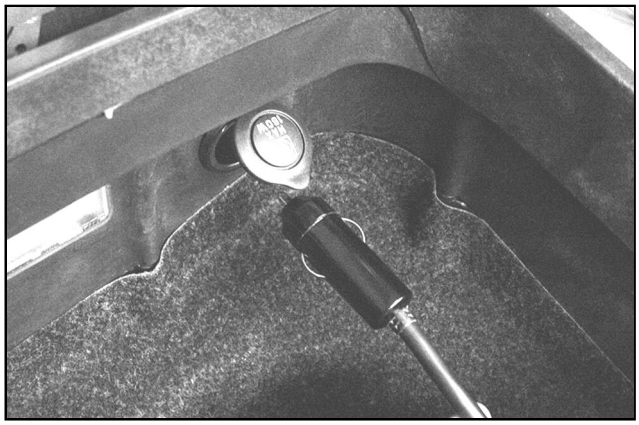

Set the commutator to "ON" and select the diagnosis tester menu on the immobilizer function.
Scroll down the available pages to reveal the data present in the control unit.

NOTE: The blank system can be revealed after initial assembly, or if the decoder and control unit are replaced at the same time.

The indications will be as follows:

Blank control unit	ON
Starting inhibited	ON
Number of keys	Zero › 250

System programming

Two keys are supplied with the vehicle:
- Master key (red) with removable transponder
- Service key (black) with fixed transponder

To codify the system the master key and service key must be used as follows:

- Insert the master key, set to “ON” and keep in this position for 2 seconds (limited values 1-3 seconds).
- Insert the black key and set to “ON” for 2 seconds.
- If duplicate keys are available, repeat the operation with each key.
- Insert the master key again and set to “ON” for 2 seconds.

The maximum amount of time available for changing from one key to the next is 10 seconds.
Up to 7 service keys (black) are accepted in the same memorization process.
The correct timing of the procedure is indispensable; if incorrect, repeat all from the beginning.

Once the system programming has been carried out, an inseparable link is created between the master key transponder and the decoder and control unit.
Maintaining this link, it is possible to proceed with programming of new service keys resulting from loss, replacement, etc.
Every new programming procedure cancels the previous one, so to add or eliminate a key it is indispensable that the procedure be repeated with all the service keys to be used.

NOTE: Accidental loss of the service key programming may derive from general disturbances of the ignition system. In this case proceed with the H.V. line screening controls.

In any event it is recommended that resistive spark plugs be used.

1 - LED indications

When the key switch is set to “ON” and programming is carried out normally, the LED should light up as indicated in the diagram.

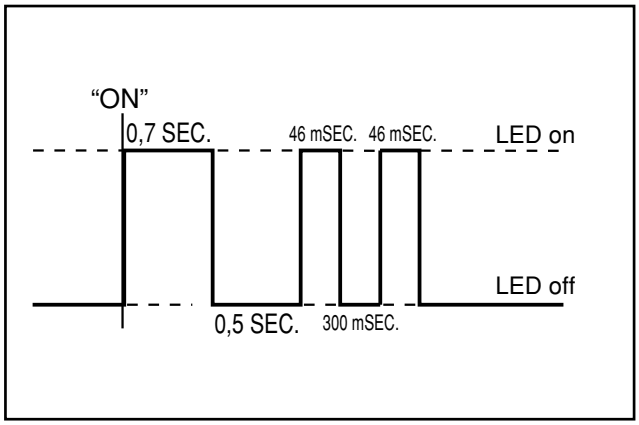

WITH MASTER KEY

After the confirmation flash when set to “ON”, the number of flashes that follows is equal to the number of keys programmed.

WITH SERVICE KEYS

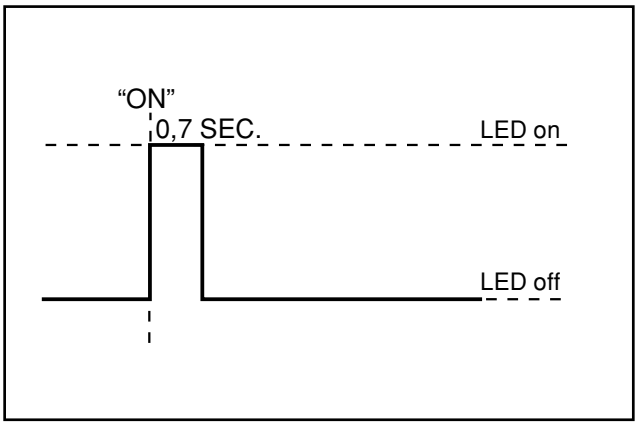

2 - Blinking deterrent light

By setting from "ON" to "OFF" when the system is programmed, the LED gives an intermittent light, as a deterrent against theft. This occurs with any key that has been programmed.

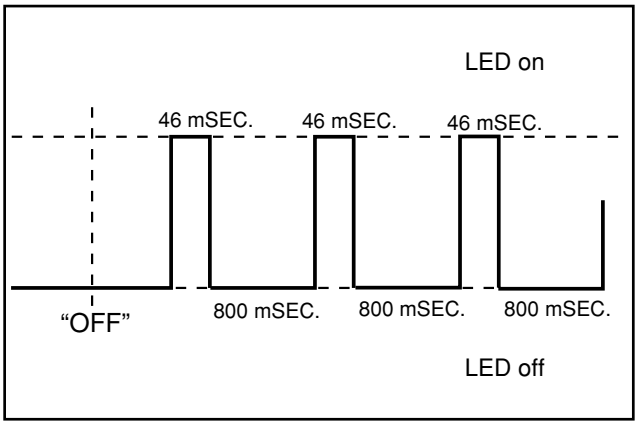

When the vehicle is not in use, so as not to eccessively discharge the battery, the blinking deterrent light stops automatically after 48 hours. By setting to the positions "OFF" "ON" "OFF" a new 48 hour cycle begins.

3 - Control of information revealed by the control unit with the system programmed

Connect the diagnosis tester 020460Y - see page 9-17
Set to "ON" and select the immobilizer function.
Visualize the data by scrolling the available pages.

The information given will be as follows:

Blank control unit	OFF
Starting inhibited	OFF
Number of keys	2*

* The number indicates how many keys have been entered in the programming including the master key.

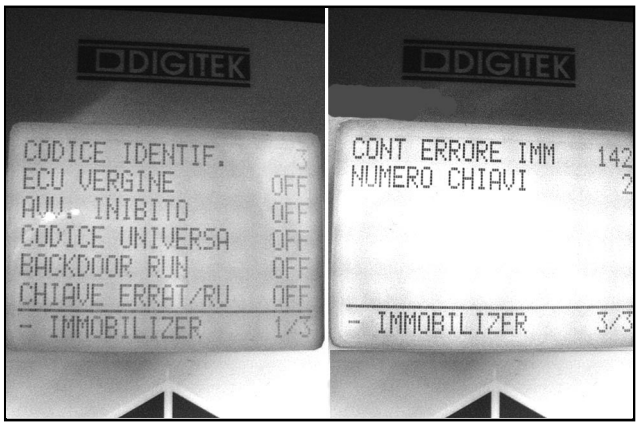

4 - System reprogramming in case of component replacement

1 Cylinder replacement
- Remove the transponder of the original master key and install it on the master key of the new cylinder.
- Reprogramme the system as described previously.

2 Decoder replacement
Following replacement of the decoder the full programming procedure must be followed.
The programming is indispensable to achieve engine ignition.
(See page 9-18 system programming)

3 Control unit replacement
Following replacement of the control unit it is necessary to carry out the programming in order to activate engine ignition.
In this case it is sufficient to set to “ON” using the master key.

NOTE:
- Programming cannot be carried out with a service key (black).
- An unprogrammed control unit allows no functional diagnosis of the engine.

4 Service key replacement or duplication
Keys can be duplicated by using the drafts and the original master key.
It is also possible to request a duplicate by using the code of the vehicle CODE CARD.
Carry out the new programming using the master key and all the service keys (See page 9-18 - system programming)

NOTE:
The CODE CARD can only be used when the original MASTER KEY is available.

Diagnostic codes

LED signalling is divided into 3 phases:

1st phase - One flash: recognition of the “ON” setting
2nd phase - Series of flashes: diagnostic code signal
3rd phase - Fixed light on or off: on = ignition inhibited,
off = ignition possible

1 Diagnostic code n°1

Code 1 indicates an unprogrammed system - see page 9-17.

If the code persists after carrying out the programming procedure, repeat the procedure more carefully, paying attention to the “ON” timing of each key.

If the code still persists proceed as follows:

- Disconnect the negative battery.
- Remove the connector from the control unit.
- Link the special tool 020481Y between the fuel injection system and the control unit.
- Remove the main connector from the decoder.

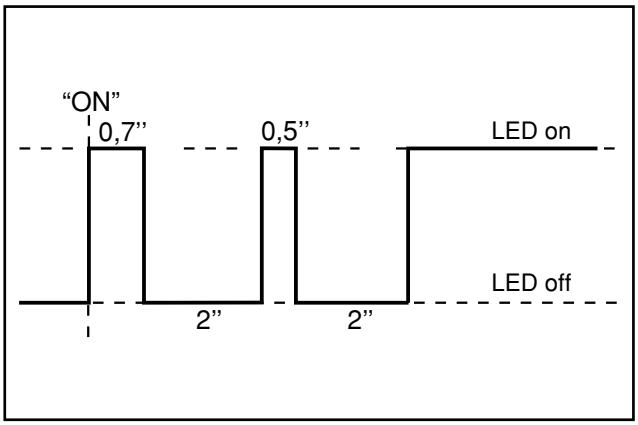

NOTE: To access the components see page 9-7.

Using a multimeter check the continuity between control unit pin 16 and decoder connector pin 6 → NO → Reset or replace the harness

YES ↓

Check the connections accurately → NO → Reset

YES ↓

Replace the decoder. Connect the battery Repeat the programming → NO → Disconnect the battery, replace the control unit, connect the battery. Repeat the programming

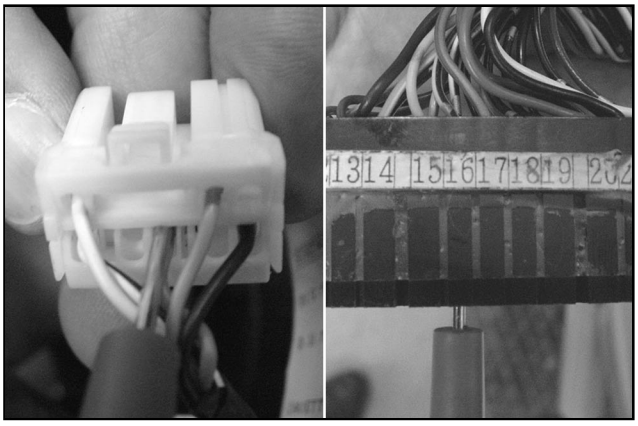

2 Diagnostic code n°2

Code n°2 indicates a system in which the decoder does not perceive the transponder signal

- Starting inhibited
- Fuel injection indicator fixed light

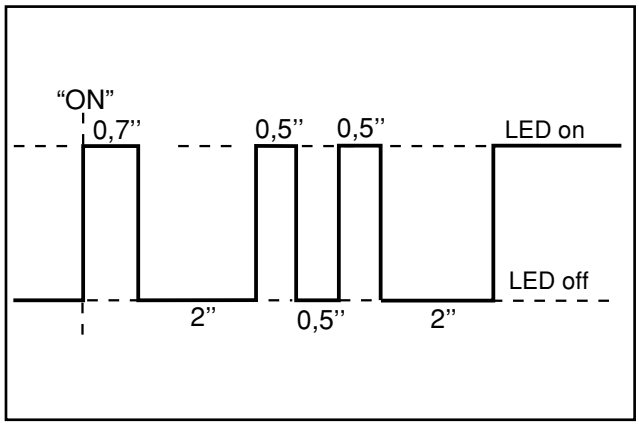

In this case proceed as follows:

Control whether the code is repeated when using a second key → NO → <u>Anomaly revealed with a service key:</u> Replace and reprogramme. <u>Anomaly revealed with master key:</u> Replace the transponder with one from a new cylinder kit. Replace the decoder and control unit. Reprogramme.

YES ↓

Check that the aerial connector is correctly inserted

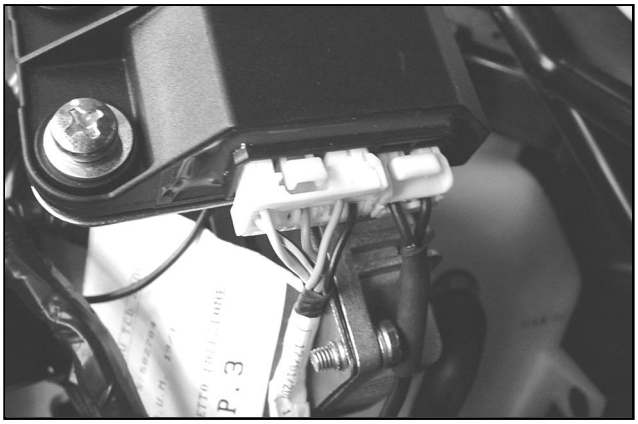

NO → Reset the connection and check that the code is present.

YES ↓

9

YES

Disconnect the aerial connector and check continuity (8 ± 2 Ω).

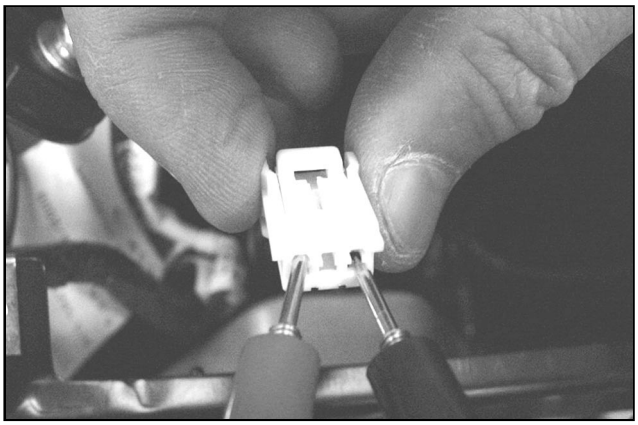

NO → Replace aerial

YES

Check the correct positioning of the aerial

NO → Position correctly

YES

Replace the decoder and check that the code is present

3 Diagnostic code n°3

Code n°3 indicates a system in which the decoder perceives a transponder not foreseen in the programming.

- Starting inhibited
- Fuel injection indicator fixed light on

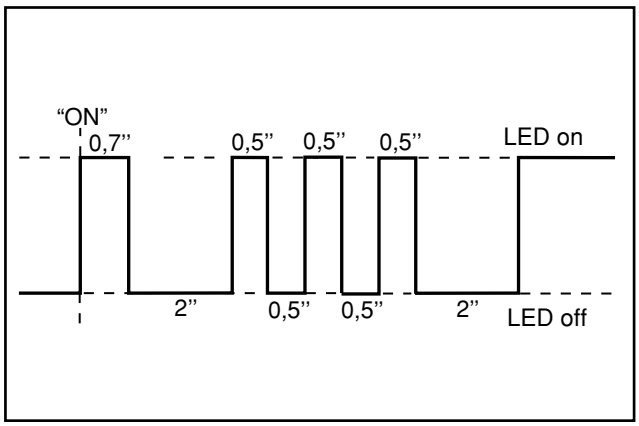

Check whether the code persists if the master key is used.

NO → Repeat the programming of all the service keys.

YES

Check that component connections are correct (keys-decoder-control unit)

NO → Reset

YES

Replace the decoder and control unit. Reprogramme the components.

4 Diagnostic code n°4

Code n°4 indicates a system in which the decoder is blank and the control unit is programmed.
The key is recognized by the control unit.

- Starting inhibited
- Indicator

Repeat the key programming procedure using the original MASTER key.

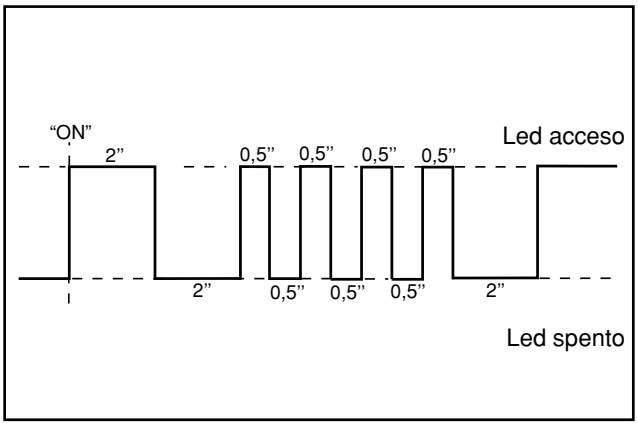

Diagnostics guide of anomalies not revealed through decoder self-diagnosis

① Immobilizer LED fails to light up

Control whether the fuel injection indicator lights up for 5 seconds after setting to "ON"

YES

Check 7.5A fuse n°8 (undersaddle compartment)

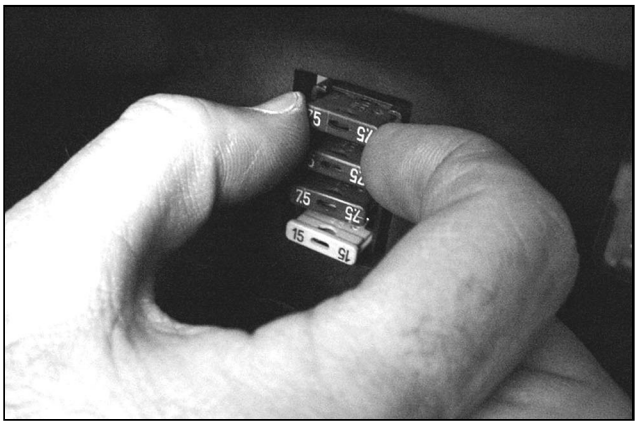

NO

Check for any short circuits on the digital instrument feed line.
Check that there are no short circuits on the digital instrument itself.

Reset

NO

YES

YES

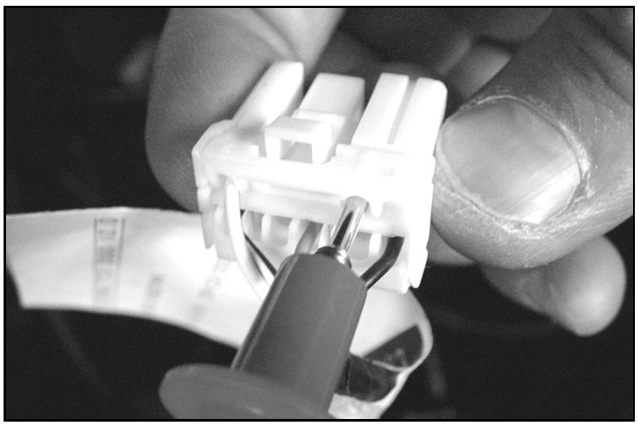

Check that the LED lights up by earthing PIN N°2 of the decoder (grey wire)

YES

Replace the decoder and reprogramme

NO

Disconnect the connector between the vehicle system and the fuel injection system.

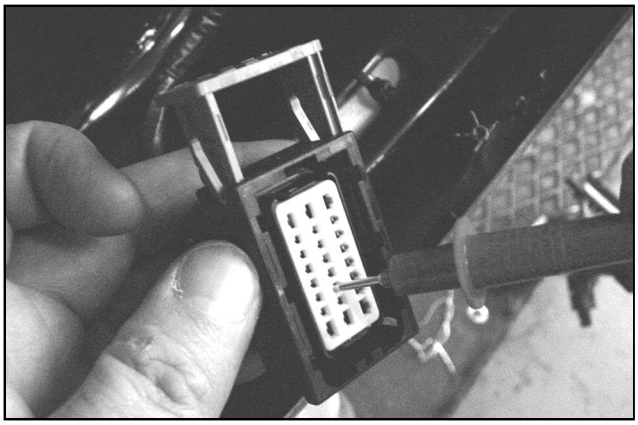

Earth the connector yellow-grey wire, vehicle system side.
(connector with control button)
Check if the LED lights up.

YES

Carefully check the connector between the vehicle system and the fuel injection system.
Reset or replace the fuel injection harness.

NO

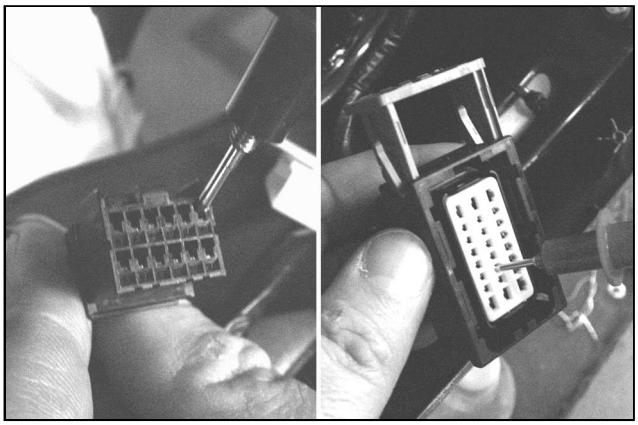

Check that there is continuity of the yellow-grey wire misurando between the connecting link from the fuel injection system
and the yellow-grey 12-way connector to the digital instrument, vedi figura.

(connector with button)-yellow-grey (PIN 6/12 digital instrument) =
continuity

YES

NO

YES

Check the presence of battery positive tension on PIN 5/12 of the 12-way digital instrument

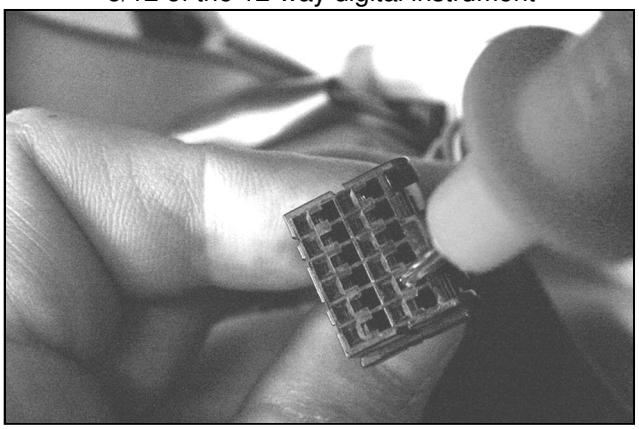

NO

Reset or replace the harness

YES

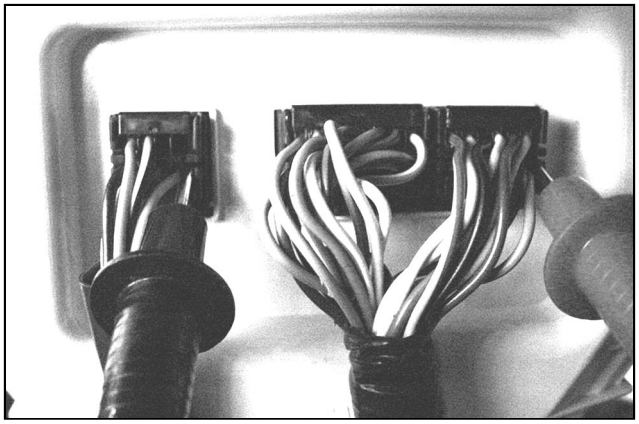

Check continuity of the digital instrument between PIN:

6/12 (yellow-grey) - 4/8 (light blue) = 0Ω (continuity)

NO

Replace the digital instrument

YES

Check continuity of the connection wire on the analogic instrument
4/8 (light blue) - 4 (analogic instrument) = 0Ω (continuity)

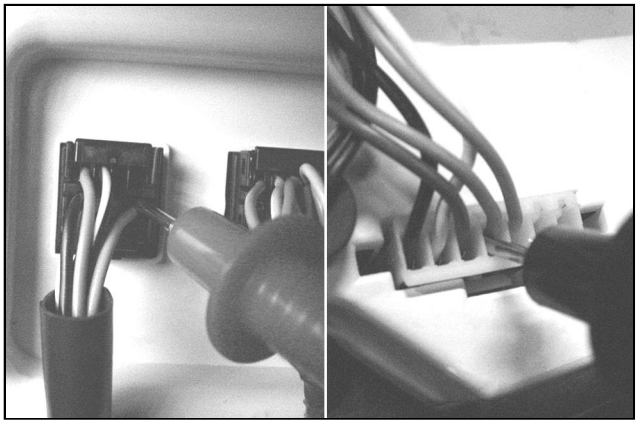

NO

Reset the harness

YES

The LED is faulty. Replace the analogic instrument.

NO

If the fuel injection indicator does not light or if it lights up for 3 seconds, proceed with controls of decoder and control unit feed circuits.
See page 9-27.

9

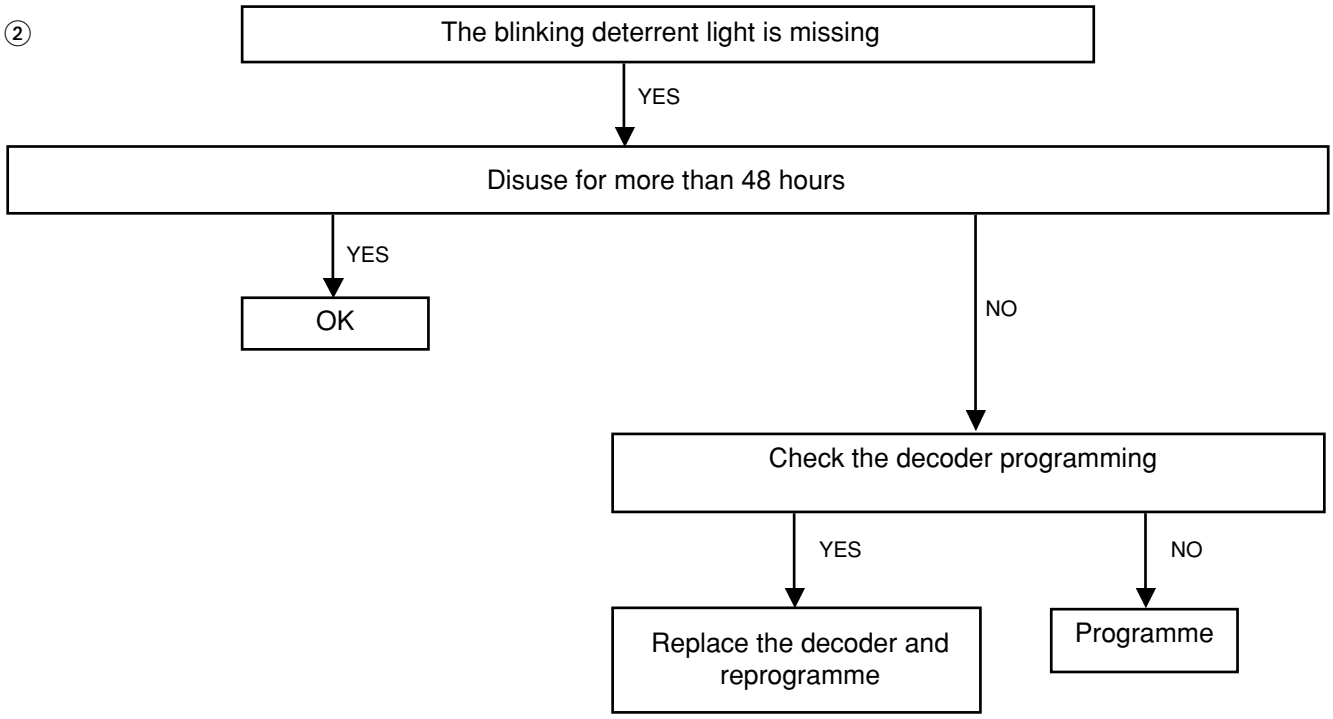
②
The blinking deterrent light is missing
YES
Disuse for more than 48 hours
YES
OK
NO
Check the decoder programming
YES
NO
Replace the decoder and reprogramme
Programme

FEED CIRCUIT OF THE DECODER AND THE FUEL INJECTION CONTROL UNIT

1 Check that circuit feed is constant

The basic feed on the decoder is necessary for the management of the blinking deterrent light. The feed on the injection control unit is necessary for the management of the stepper motor.
The lack of basic feed inhibits both ignition and fuel injection.
In the case of a feed problem, diagnosis tester n° 020460Y gives the information “THE CONTROL UNIT DOES NOT RESPOND”.

To carry out controls proceed as follows:

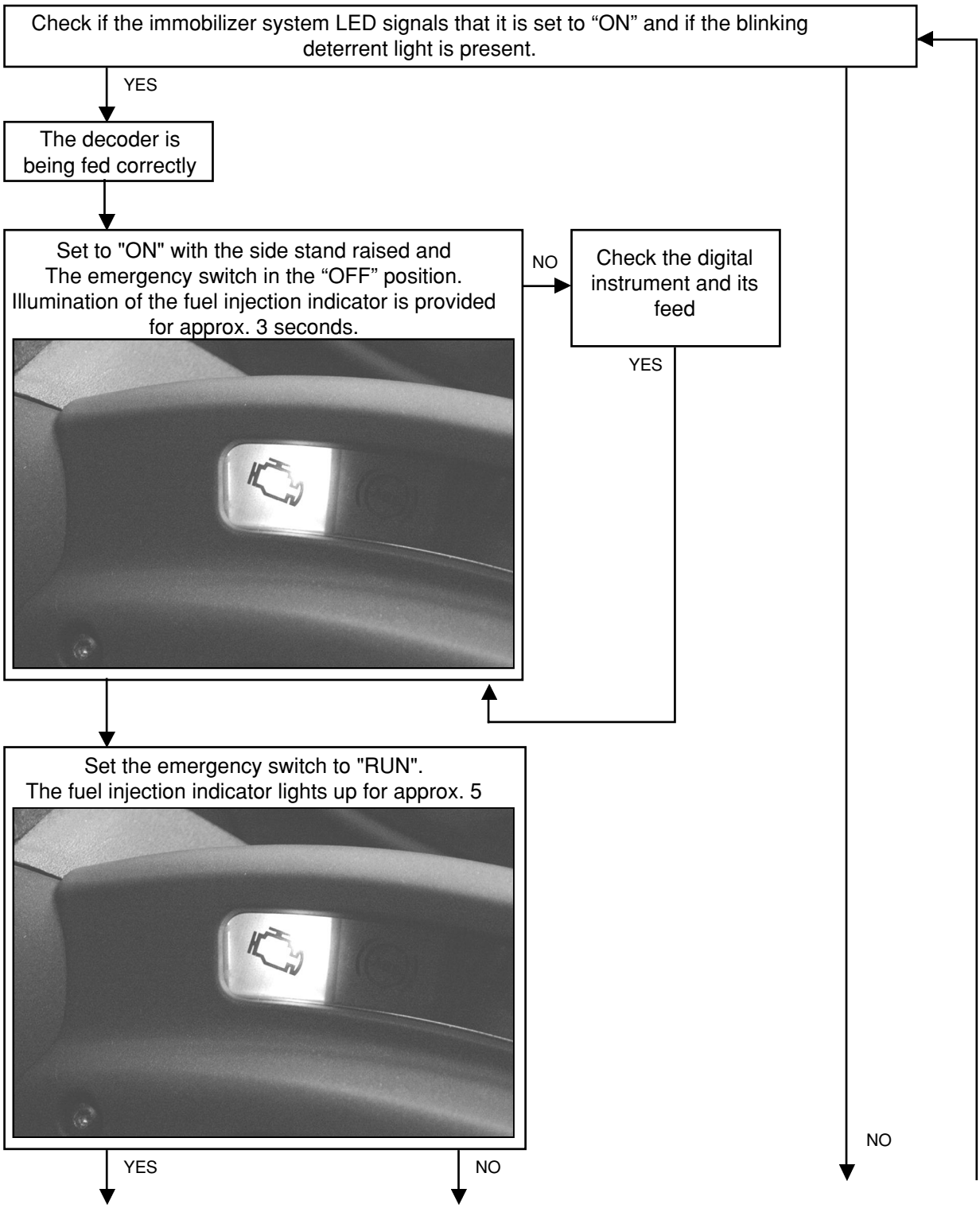

YES

The fuel injection control unit is being fed safely.

NO

NO

Check efficiency of 3A fuse n°3.

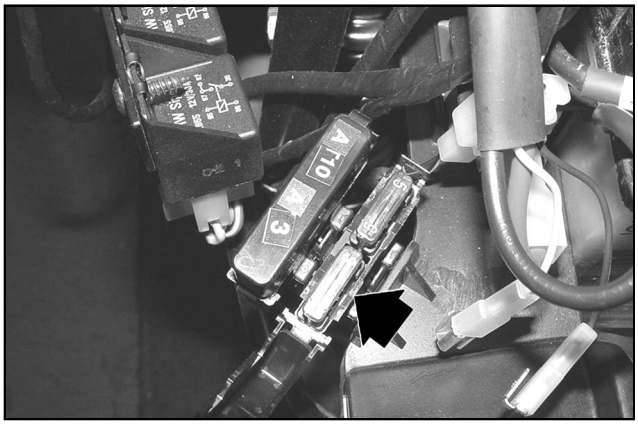

YES

NO

Eliminate any possible short circuit of the harness and replace the fuse.

YES

NO

Check for a possible short circuit of the decoder or control unit. Replace if necessary

YES

Interpose the special tool n° 020481Y between the control unit and the fuel injection system. See page 9-8

Disconnect the main decoder connector and check the following conditions:
terminal n° 3=positive battery
terminal n° 4= negative battery

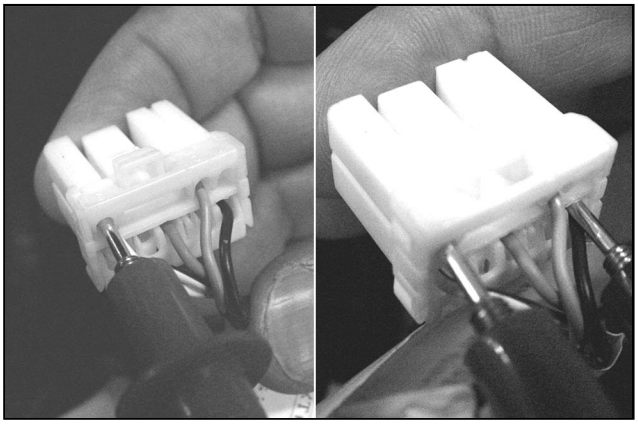

NO

YES

Decoder basic feed correct

YES

Using the special tool check the basic feed of the control unit
PIN 17= positive battery
PIN 23= negative battery

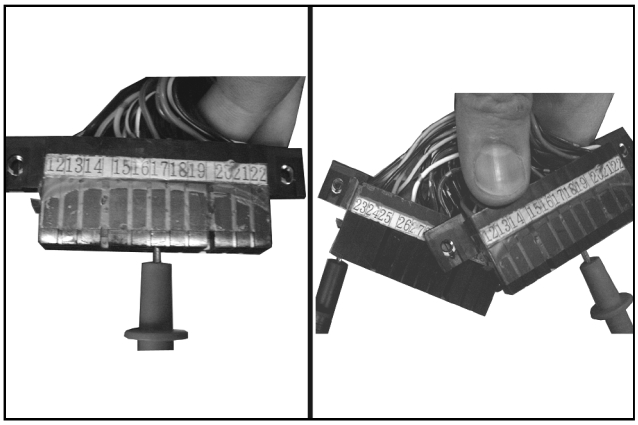

YES

Control unit basic feed is correct

NO

NO

If lack of the battery negative is revealed, check the harness and earthing to the control unit clamp.

If lack of the battery positive is revealed, disconnect the connection between the fuel injection system and the vehicle system. The vehicle system is recognizable by the connector with a coupling control button. Red-white wire on the connector, vehicle system side = battery positive Red-white wire, fuel injection system side = continuity with PIN 17 of the tool and n° 3 of the decoder.

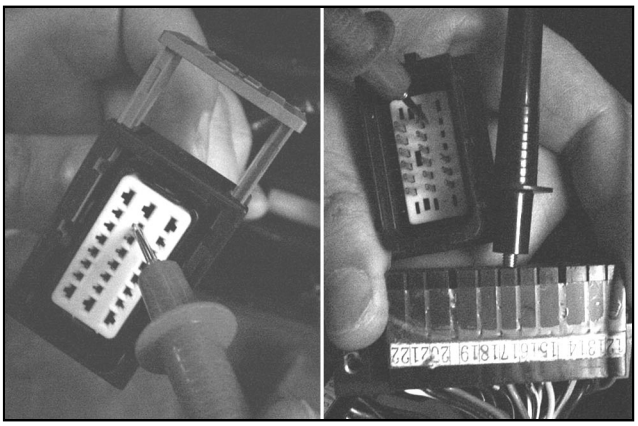

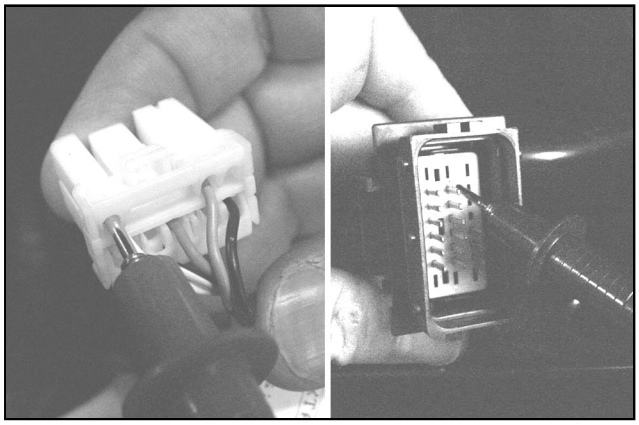

YES

NO

Reset the harness

9

2 Control of the feed circuit deriving from the key switch.

- Lack of under-panel feeds inhibits functioning of the ignition and fuel injection.
- If a feed problem is revealed, the diagnosis tester n° 020460Y gives the information "THE CONTROL UNIT DOES NOT RESPOND".

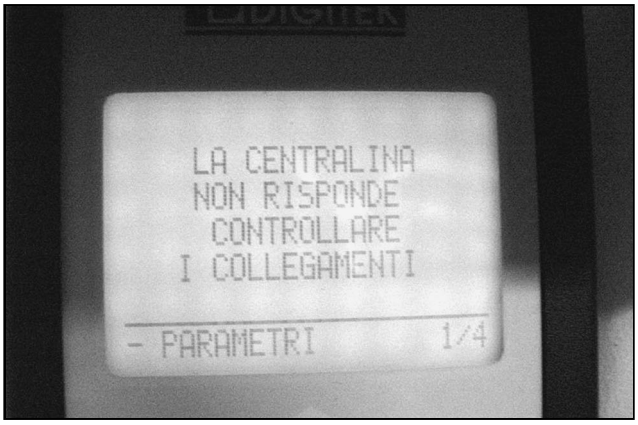

To control the circuit proceed as follows:

Check if the immobilizer system LED signals the setting to "ON".

YES

Raise the side stand.
Set the emergency switch to "OFF".
Set the key switch to "ON".
Set the emergency switch to "RUN".
Check if the fuel injection indicator lights up for 5 seconds.

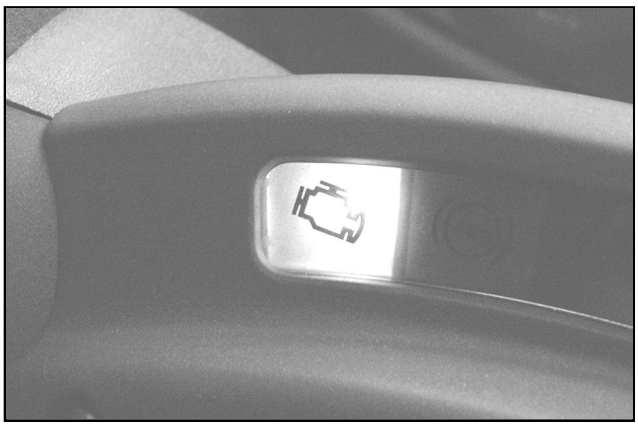

YES

The under-panel feeds are regular.

NO

NO

NO

NO

Check efficiency of n°4 5V fuse

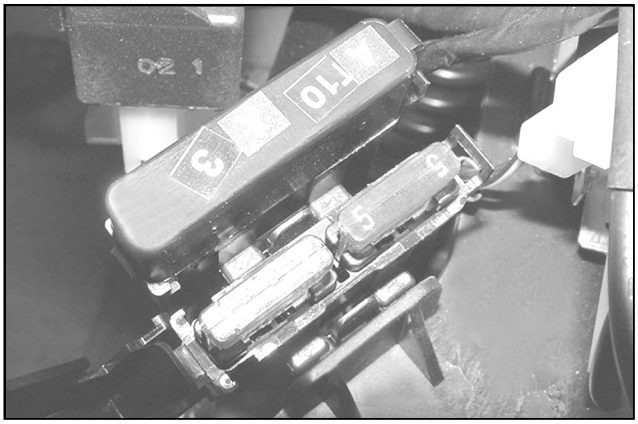

YES

NO

Interpose the special tool n° 020481Y between the control unit and fuel injection system. See page 9-8

Eliminate any short circuit, replace the fuse If necessary check the decoder and control unit.

Disconnect the main decoder connector and check the following conditions:
Commutator set to "ON", switch set to RUN, side stand raised
Terminal n°8= battery positive
Terminal n°4= battery negative

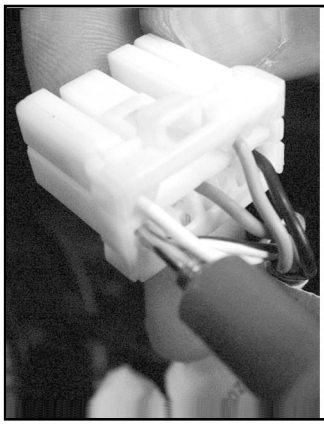

YES

Decoder with under-panel feed is correct

NO

YES

YES

Using special tool 020481Y check the under-panel feed of the control unit.
Commutator set to "ON", switch set to "RUN", side stand raised.
PIN 26= battery positive; PIN 23= battery negative

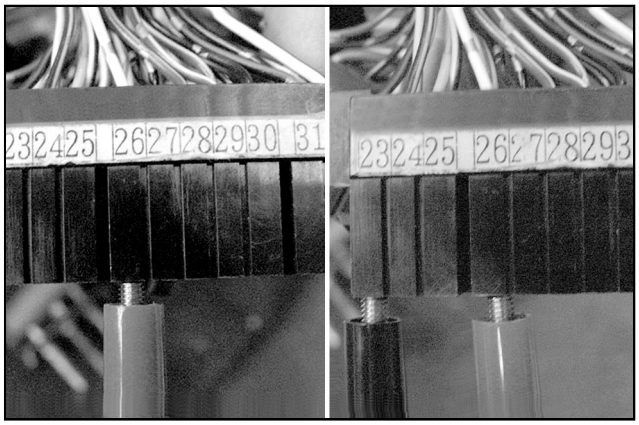

YES

Control unit with under panel feed is correct

NO

NO

If lack of feed is revealed in only one component, check the connector concerned.
If the anomaly concerns both the decoder and the control unit, disconnect the connector linking the vehicle system and the fuel injection system.

White-black wire on terminal, fuel injection side = continuity with pin 26 of the control unit and n° 8 of the decoder.

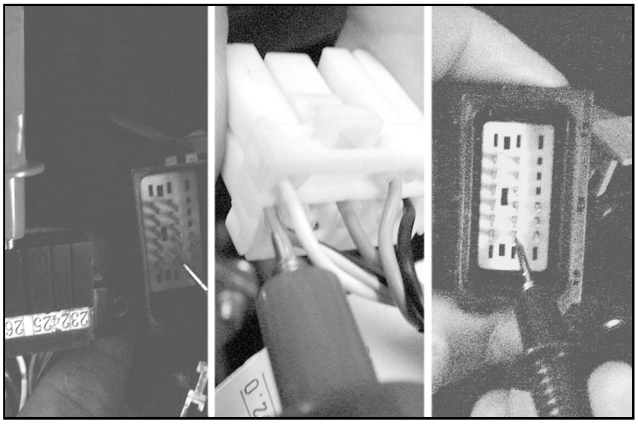

YES

NO

Repair the connection or harness

Side stand raised, commutator set to "ON", switch set to "RUN".
Terminal vehicle system side white-black wire = battery positive tension

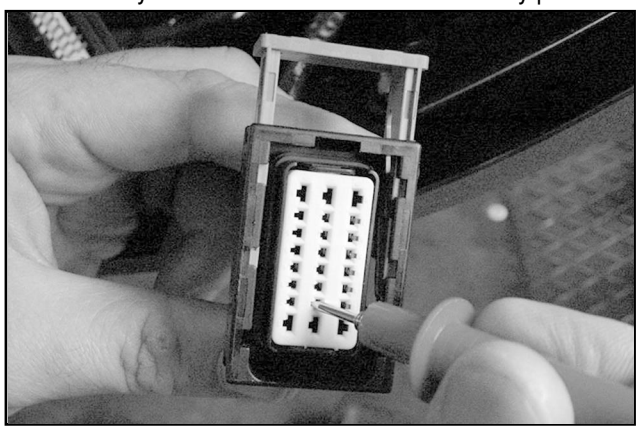

YES

NO

YES

Under-panel feed is correct
(vehicle system section)

NO

Check the connector and continuity of the Key switch set to "ON"

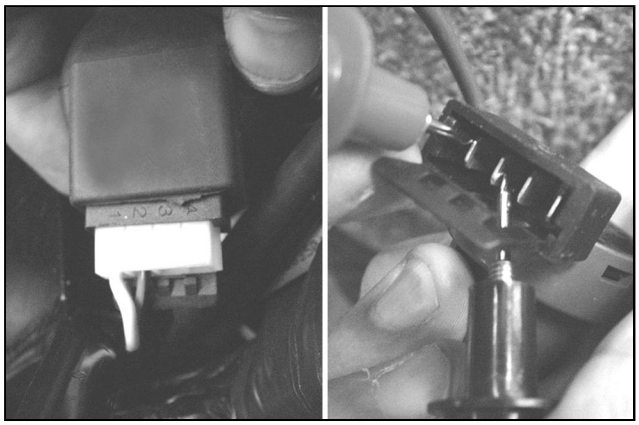

Check the stop engine electromagnetic switch connector and its efficiency.
The connector is recognized by its thicker white wire.

NOTE: check the coil resistance
85 - 86 = ~ 70Ω

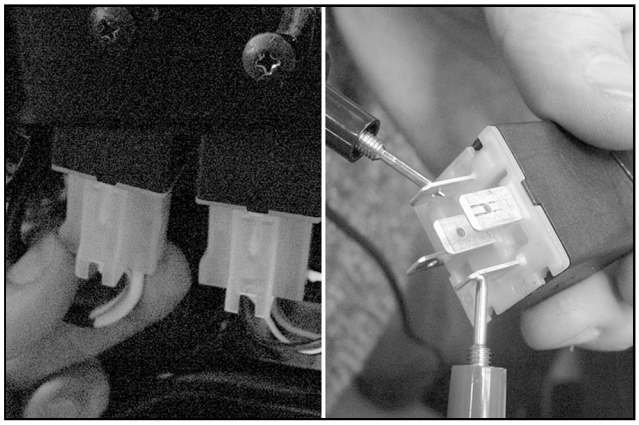

Check consents circuit:
- connector and emergency switch
- connector and deviation of the side stand

NOTE: the functioning of this circuit can be revealed also via:
- signalling of impossibility to start the engine
- functioning of the ignition control

Check the harness continuity.

Check the services control main electromagnetic switch.

Disconnect the main electromagnetic switch.
Check the diode inserted on the excitation earthing of the main electromagnetic switch.
86 - earth = high resistance continuity (connect the positive tester with 86 negative to the earth).
On inverting the polarity there should not be continuity.

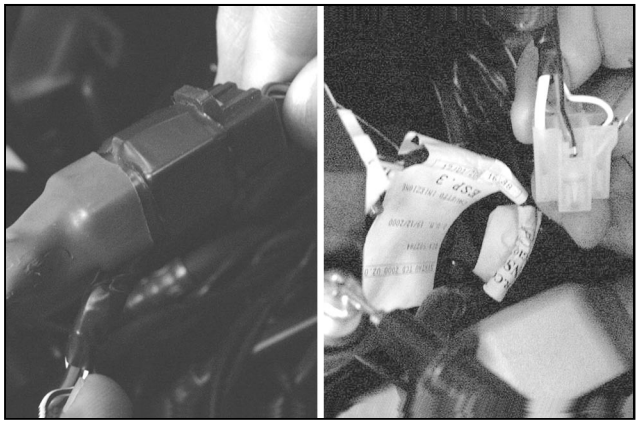

9

DIAGNOSIS TESTER LINK CIRCUIT

CIRCUIT DIAGRAM

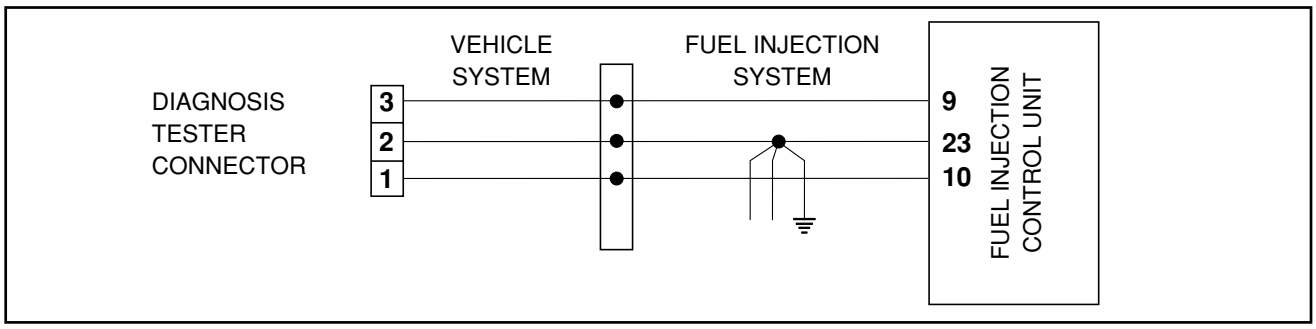

Connect the diagnosis tester n° 020460Y see page 9-17.
If the diagnosis tester gives the information "THE CONTROL UNIT DOES NOT RESPOND", remove the under-panel feed for 10 seconds and reset to "ON"; if the same information is repeated proceed as follows:

Check the diagnosis tester connections

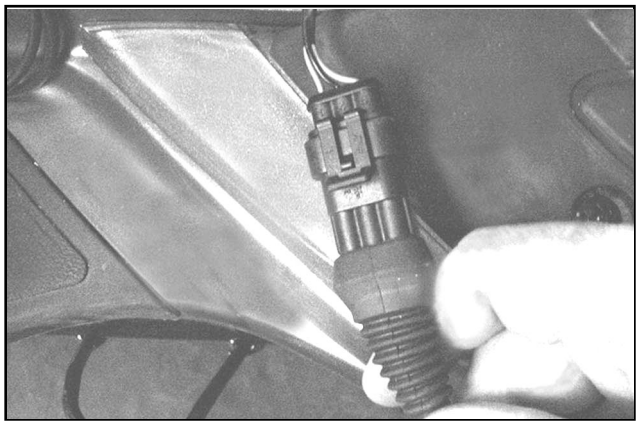

YES → Check the basic and under-panel feeds of the control unit (see page 9-8).

NO → Reset

Interpose the special tool 020481Y between the control unit and the fuel injection system (see page 9-8). Keep the control unit disconnected.

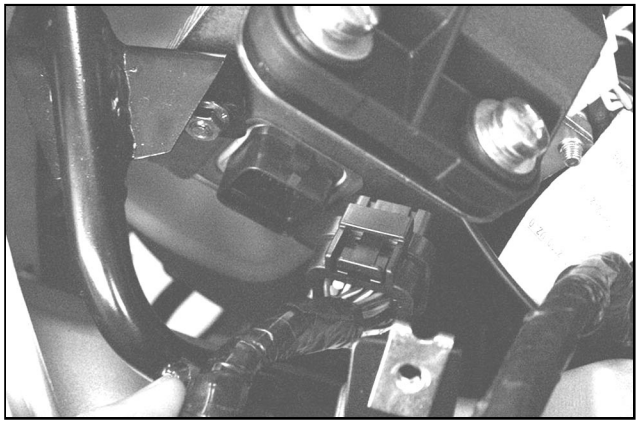

Check the following conditions:

① diagnosis socket - 10 control unit = continuity
② diagnosis socket - 23 control unit = earthed continuity
③ diagnosis socket - 9 control unit = continuity
10 - 23 = isolation (> 1MΩ)
9 - 23 = isolation (> 1MΩ)

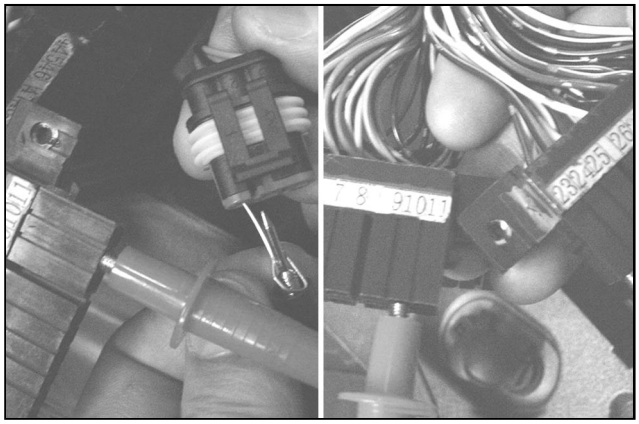

YES

The circuit functions correctly

Check the control unit

NO

Disconnect the connection between the fuel injection system and the vehicle system.
Repeat controls in the two system sections.

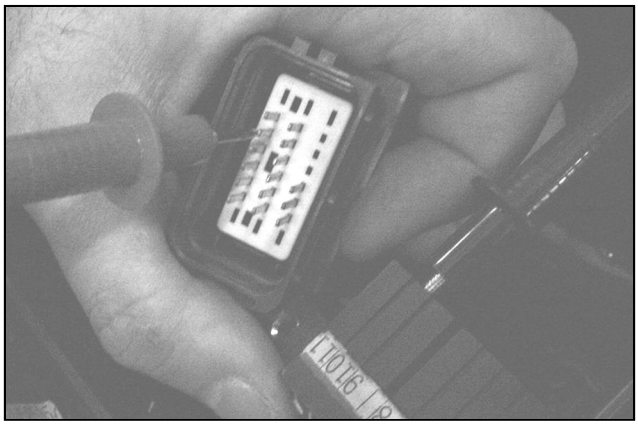

Repair any interruptions or short circuits

FUEL INJECTION INDICATOR CIRCUIT

CIRCUIT DIAGRAM

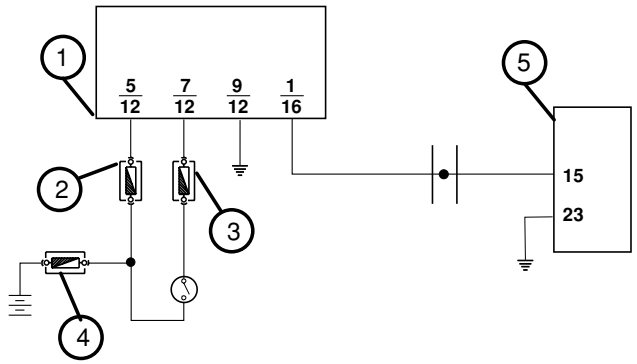

1	DIGITAL INSTRUMENT	4	30A FUSE
2	7.5A FUSE	5	CONTROL UNIT
3	7.5A FUSE		

TERMINAL	CONDITIONS		STANDARD VALUES
15 - 23	- commutator set to "ON" - side stand raised - switch set to "RUN"	during checks	O V
		after checks	battery tension

The fuel injection indicator is commanded whenever the setting is "ON" with a timing of 3 seconds generated by the digital instrument. This phase is normally superimposed by fuel injection control unit control. This timing lasts 5 seconds.

The diagnosis tester 020460Y is not programmed for the control of this circuit.
Proceed as follows:

Commutator "ON" under conditions of:
- Side stand raised
- Emergency switch set to "OFF"

The fuel injection indicator lights up for 3 seconds.

YES → Keep the commutator set to "ON"
Set the emergency switch to "RUN"
Check that the indicator lights up for 5 seconds

YES → The system is functioning

NO → If the other indicators light up check the digital instrument. Otherwise, control the feed and fuses, and if necessary replace the digital instrument.

NO →

Interpose special tool 020481Y between the control unit and the fuel injection system (see page 9-8).

Key switch set to "ON".
Side stand raised.
Emergency switch set to "RUN".
Wait for more than 5 seconds.
15 - 23 = battery tension

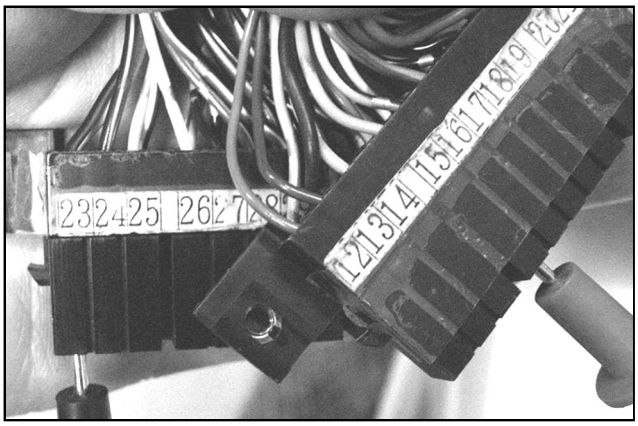

YES

Check the control unit connector
Check the control unit

NO

Check the connector between the fuel injection system and the vehicle system.

Check continuity of the brown-black (1/12) wire:
digital instrument (1-2) - connector
connector - PIN15 control unit

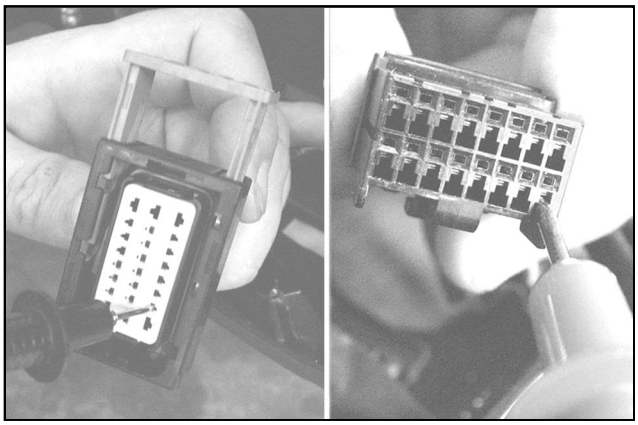

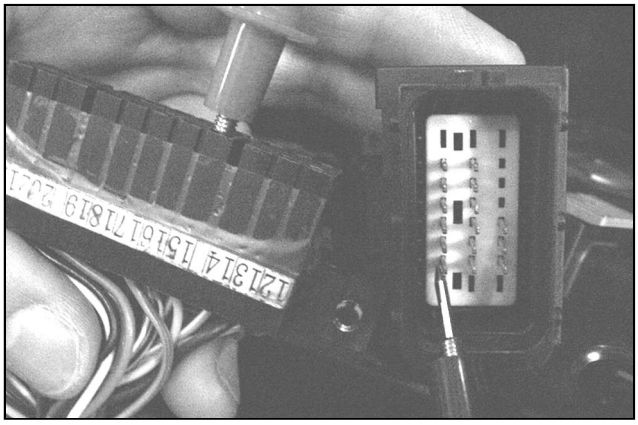

The fuel injection control unit therefore manages the indicator negative. The indicator should turn itself off after the initial check.
The indicator lights up again as soon as the control unit self-diagnosis reveals an anomaly.
When the anomaly disappears, the indicator turns itself off again; however, it is necessary to proceed with related function controls.
The indicator may light up independently of engine functioning.

SELF-DIAGNOSIS SYSTEM

The fuel injection control unit has a self-diagnosis function.

When an anomaly is revealed, the control unit proceeds to:
- lighting of the fuel injection indicator (only when current).
- activation of engine management controls on basic data entered in the control unit (where possible).
- memorization of the anomaly (always).

If an anomaly revealed is not always present, the indicator follows the state of the anomaly and memorization remains active. Memorization of the event is cancelled automatically if the anomaly does not occur again for more than 16 usage cycles (warm up - usage - cooling). Disconnection of the battery does not cancel the memorization.

- **Control of memorized anomalies**

Connect diagnosis tester 020460Y to the vehicle system - see page 9-17.
Selection the “ERRORS” function menu.

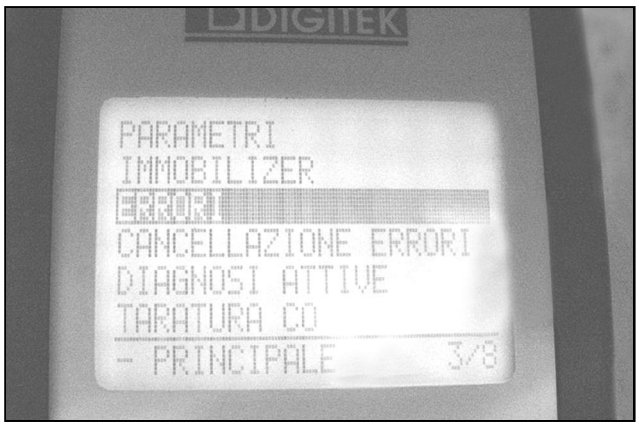

The pages of the tester show a list of the errors that may be revealed during self-diagnosis.
Errors revealed through self-diagnosis are marked by one or two reference bullets.

These are located in two rows
Row A = current anomalies (present)
Row M = memorized anomalies

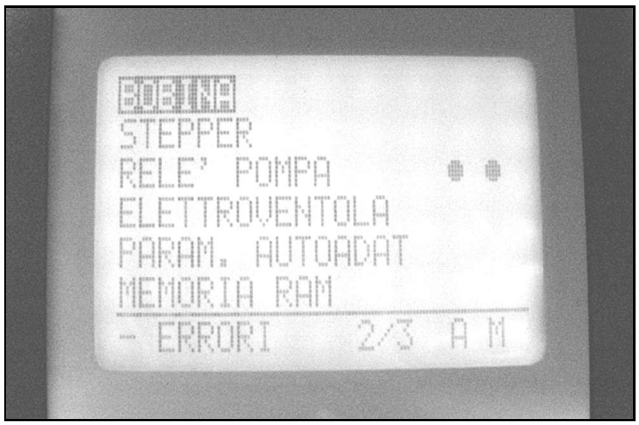

Errors revealed through self-diagnosis may refer to the following control unit system circuits or fields:
- throttle valve position signal
- ambient pressure signal
- coolant temperature signal
- air intake temperature signal
- incorrect battery tension
- Injector and related circuit
- H.V. coil and related circuit
- Stepper and related circuit
- Pump relay circuit
- Electrical fan relay circuit
- RAM Memory
- ROM Memory
- EEPROM
- Microprocessor
- Signals panel (revolutions - phase - unstable cycle signal)

The anomalies underlined cause the engine stopping.
In the other cases the engine works on basic data management.

- **Cancellation of memorized anomalies**
After any repairs, connect the diagnosis tester 020460Y (see page 9-17).
Select the function menu “ERROR CANCELLATION”
Press OK and follow the instructions given.

Carry out a trial run to check if the anomaly is repeated.

For a guide to resolving any anomalies consult the related parts of this chapter.

FUEL SUPPLY SYSTEM

General details

Fuel supply to the injector is guaranteed by a pump, a filter and a pressure regulator integrated with a fuel level indicator inside the tank.

The pump assembly is connected to the injector via:
2 semi-rigid tubes
4 quick-connections
1 T-ring joint with O ring and injector stop bracket

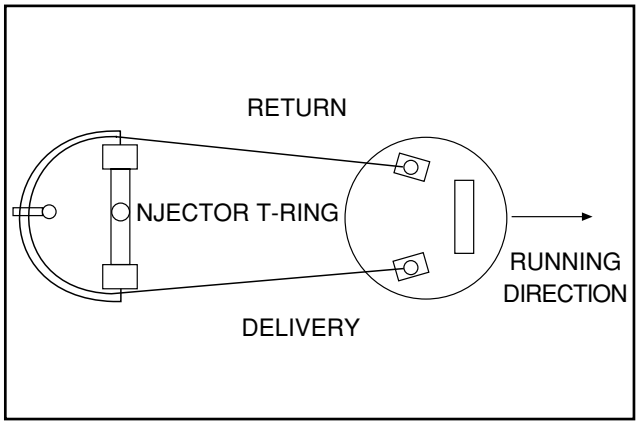

The tubes are crossed and fixed to the air intake manifold so as not to provoke wear and tear on the quick-connections connected to the injector T-ring joint.

9

NOTE: before carrying out work on the supply system, all parts should be cleaned accurately to avoid damaging the stability of the quick-connections or allowing the infiltration of impurities into the ducts.

WARNING: The system is pressurized.
Do not smoke while working on parts.
Sprays of fuel can be expected.

PRECAUTIONS:
- Before starting the engine, ensure there is fuel in the tank.
- Do not run the vehicle on the reserve tank, so as to avoid the risk of running dry.
- If a long period of disuse is expected, fill the tank to at least half.

FAILURE TO RESPECT THESE REGULATIONS MAY DAMAGE THE PUMP

CIRCUIT DIAGRAM

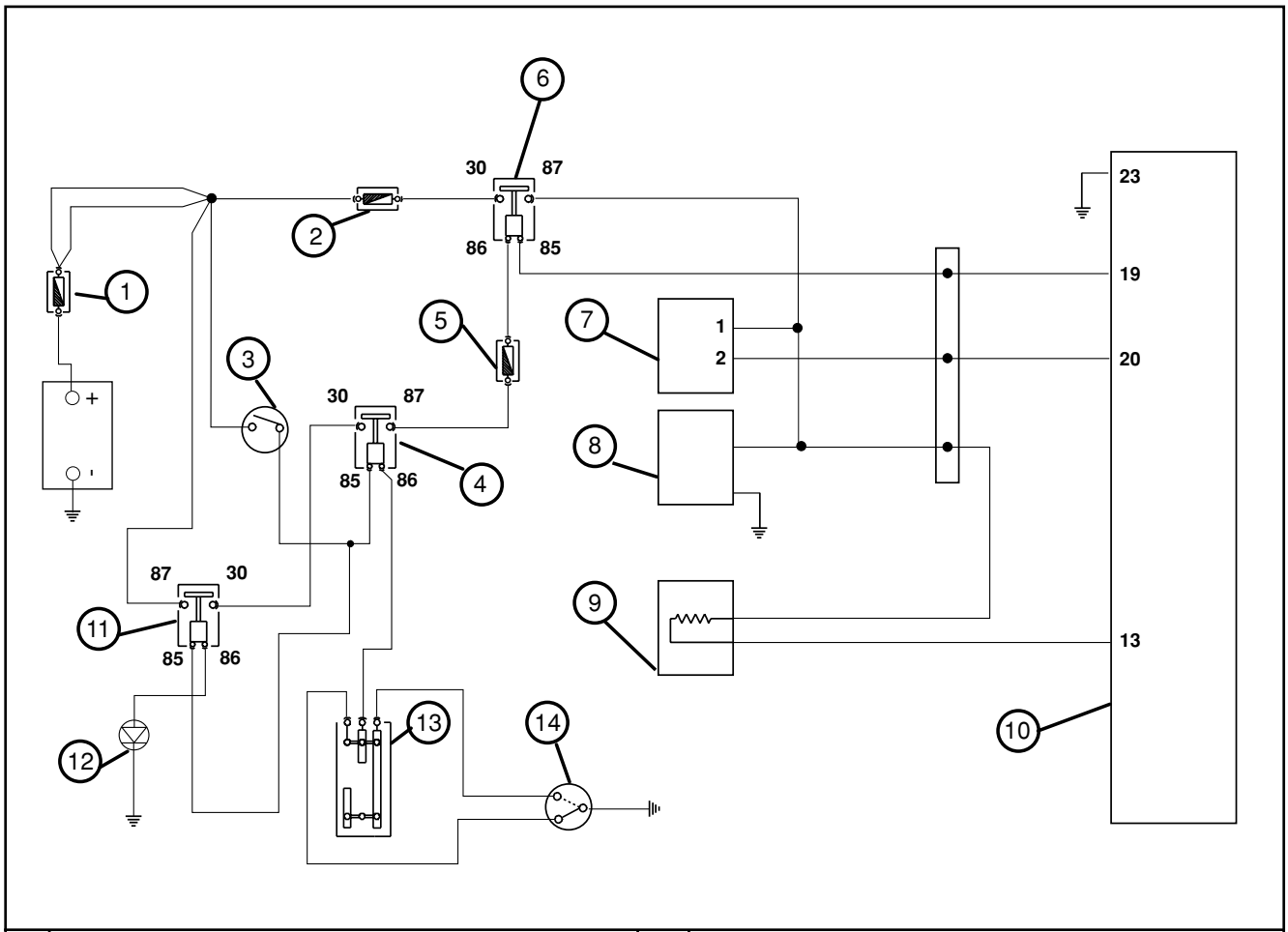

1	30A FUSE	8	FUEL PUMP
2	10A FUSE	9	INJECTOR
3	COMMUTATOR	10	FUEL INJECTION CONTROL UNIT
4	ENGINE STOP ELECTROMAGNETIC SWITCH	11	MAIN ELECTROMAGNETIC SWITCH
5	5A FUSE	12	2A DIODE
6	ELECTROMAGNETIC SWITCH	13	ENGINE STOP SWITCH
7	H.V. COIL	14	STAND SWITCH

Pump feed circuit

The control unit intervenes by activating the pump under the following conditions:

- setting to "ON" with emergency switch set to "RUN" and side stand raised.
  Pump feed for 2 seconds.

- when the phase revolutions signal is present.
  Continuous feed

The initial timing is useful to drain the system, especially after leaving the vehicle parked with the engine warm. In these conditions, fuel altered by overheating will be mixed with that in the tank.

During use, the pump function will be subordinated by the engine revolutions.

Circuit control

Proceed as follows:

Set to "ON" with the emergency switch set to "RUN" and the side stand raised.
There is pump revolution for 2 seconds.

YES

Attempt ignition.
Check that the engine revolution matches that of the pump.

YES

The electrical feed of the pump is conformant.

NO

NO

The pump does not turn or turns continuously.

Connect diagnosis tester 020460Y
to the vehicle system. (See page 9-17).

Attempt ignition.
Select the "ERRORS" function menu.
Check for the presence of anomalies.

YES

Malfunctioning of the
pump command relay circuit.

YES

Malfunctioning of:
- injector
- HV coil
- signals panel

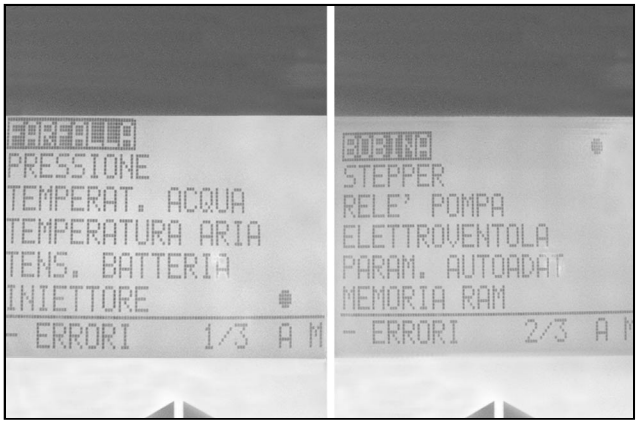

NO

9

The control unit reveals an anomaly on the wire of pin 19

YES

Earth wire
In this case the pump turns constantly when under-panel tension is present.

Check and reset the earthing isolation of wires 19-85 (of the electromagnetic switch). Check the two sections separately: vehicle system fuel injection system

Cancel the code and check from the beginning

YES

Broken wire connection
The relay cannot control the pump feed.

Install special tool 020481Y between the control unit and fuel injection system - see page 9-8.

Set to "ON" with the switch set to "RUN" and side stand raised.
Wait more than 2 seconds and check the following conditions:
19-23 = battery tension

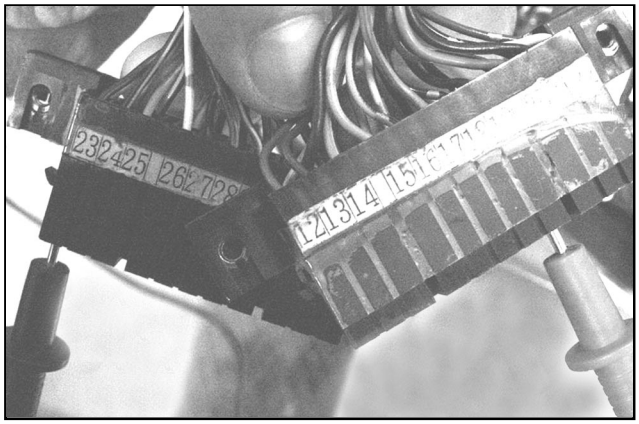

NO

YES

Replace the control unit

Disconnect the vehicle system- fuel injection system connection.
23 - black - violet (vehicle system) = battery tension

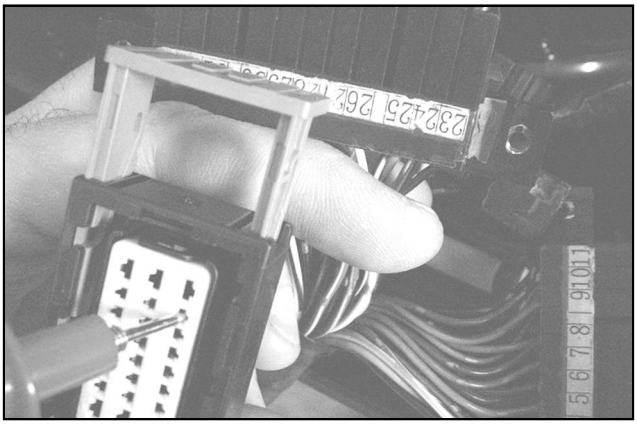

YES

Check the connector and the harness injection side

NO

Check continuity of the vehicle harness and continuity of the relay coil. Relay control:
85 - 86 = 100 ± 50Ω

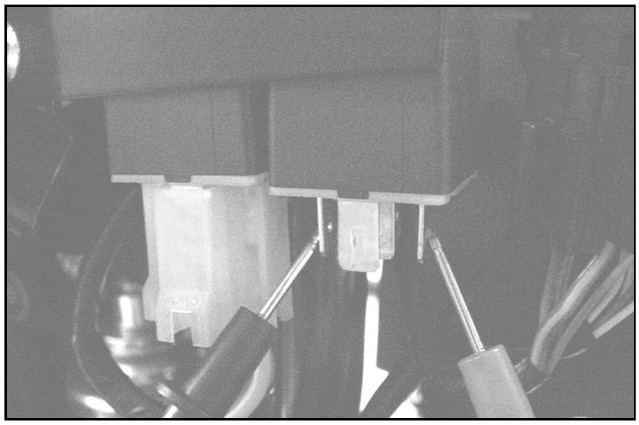

Check the efficiency of 10 A fuse n° 2

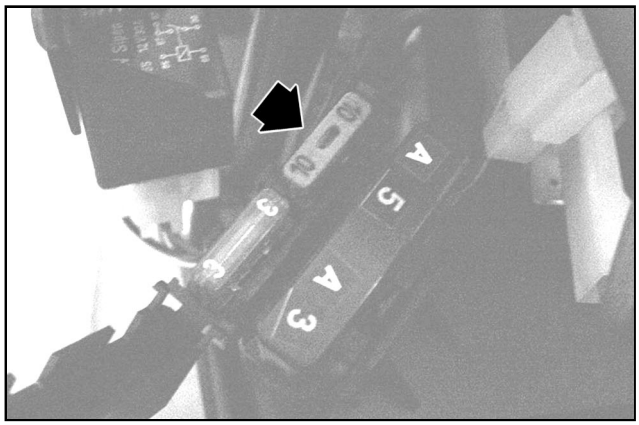

NO

YES

9

YES

NO

Check efficiency of the pump command electromagnetic switch. Check continuity of the harness between electro-magnetic switch and pump.
87 (electromagnetic switch) - green - black (pump) = continuity

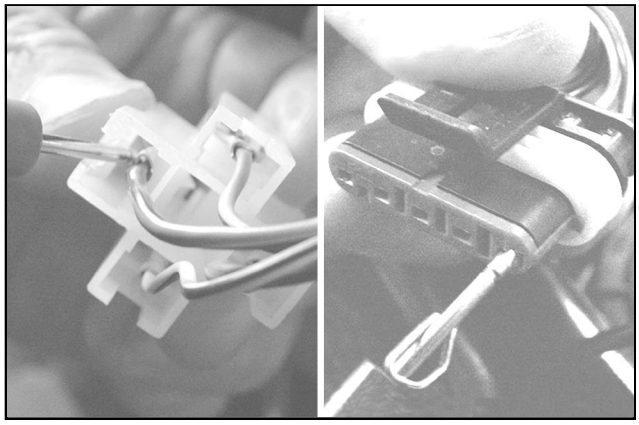

Reset and repeat controls from the beginning.

Disconnect the connectors to: fuel pump, HV coil, injector

Check the earthing isolation of the harness
87 (pump electromagnetic switch) - 23 = isolation (> 1MΩ)

NO

Reset harness isolation and replace the fuse.

YES

Check the earthing isolation of the HV coil primary and the injector coil.
See related sections. (page 9-68).

YES

Check resistance of the windings in the pump.
Resistance ~1.5 Ω

Replace the fuse and proceed with pump control.

NO

Proceed with control of absorbed current (see page 9-53).

Select the function menu "ACTIVE DIAGNOSIS" of the diagnosis tester 020460Y.
Select the fuel pump simulation function.
Activate the function with under-panel feed inserted and engine stopped.

The tester asks the control unit to activate the pump for 30 seconds

Check acoustically the following conditions:
- relay closure
- pump revolution
- relay opening

YES

The pump receives feed.
Proceed with the pump functioning control

NO

Check the pump support connector.

YES

Replace the pump see page 9-54.

NO

Reset

9

Hydraulics control and system maintenance

Before carrying out controls concerning system pressure, carefully clean all the components of the supply system.
To carry out the controls the special tool 020480Y from the fuel pressure control kit is required.

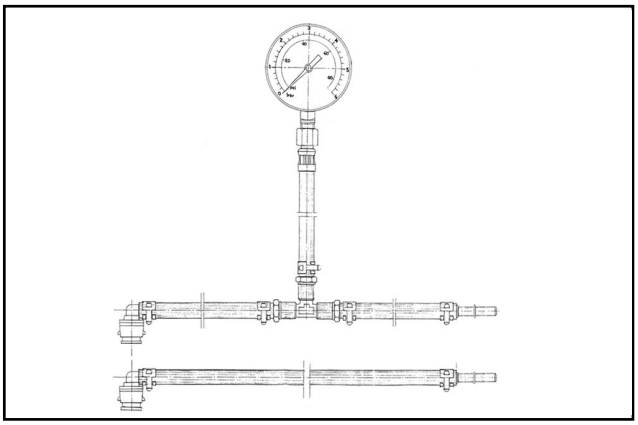

Before proceeding to detach any quick-connection reduce system pressure.
Disconnect the electrical connection from the pump support while the engine is turning over and wait for it to stop.
The engines stops at around 1.5 bar.

WARNING: disconnect the tube terminal with caution. Prevent spraying in the eyes.

The special tool has quick-connections of the same kind as those in the system.
To disconnect the female terminals (injector side) it is necessary to push the two appendices then pull outwards.

Warning - Do not use force if the terminal does not come out; try to turn it. The system is created in such a way that if traction is increased, the terminal blocks further.

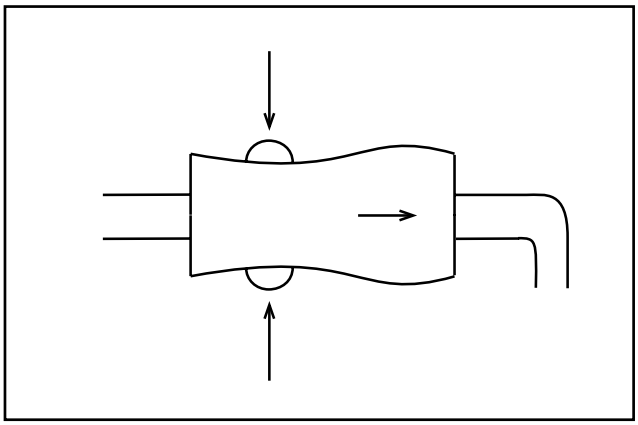

To disconnect the male terminals (pump side) it is necessary to push the coaxial tube rings towards the pump support and extract the terminals.

Warning - Do not use force if the terminal does not come out; try to turn it. The system is created in such a way that if traction is increased, the terminal blocks further.

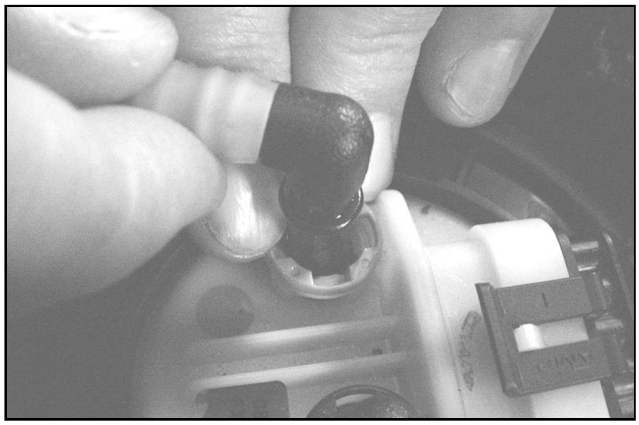

System pressure control, for practical reasons, must be carried out by connecting to the pump side.

Connect the manometer to the delivery duct (right side) and the extention tube to the return duct (left side).

NOTE: before mounting check that the tool ducts are clean.

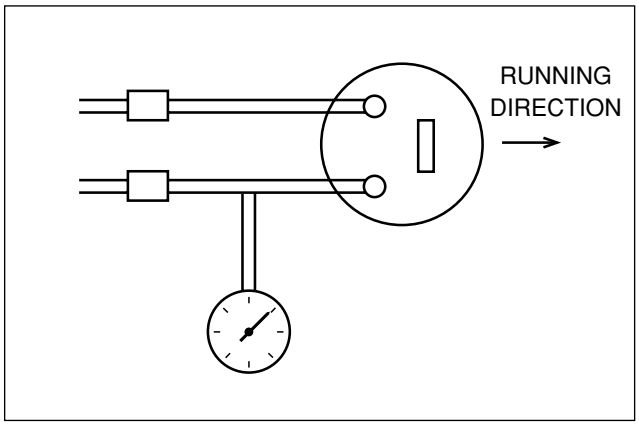

Pressure regulator control

Connect the diagnosis tester 020460Y
see page 9-17.
Select the function menu "ACTIVE DIAGNOSIS".
Select the function "PUMP DIAGNOSIS".

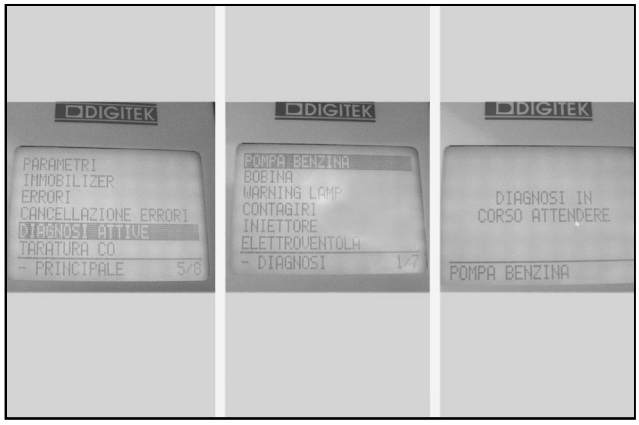

Activate the function with under-panel feed inserted and the engine stopped.
The control unit controls the pump for 30 seconds.

9

Allow the system to purge for a few seconds.
Check that the system has no external leaks.
Check the adjusting pressure with pump feed tension of more than 12 V.
Adjusting pressure = 300 - 320KPa (3 - 3.2 BAR)

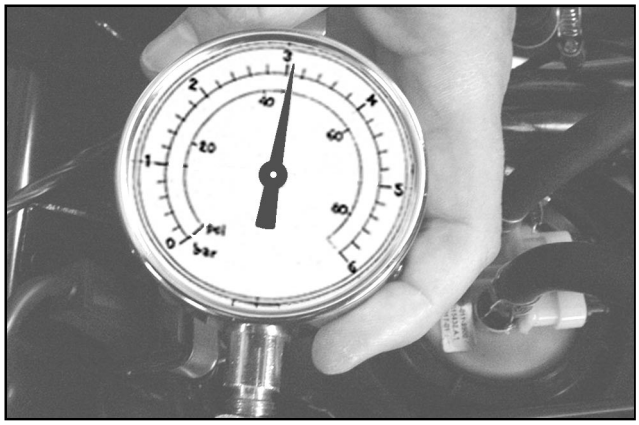

YES

The pressure regulator is efficient

NO

Pressure too high

Check that the return duct is not clogged or compressed.

Replace the pressure regulator

See page 9-54 - pump support overhaul.

NO

Adjusting pressure too low

Activate pump revolution again. Using long, flat-tonged pliers, squeeze the return duct for a moment acting only on the extention part of the special tool.
(the current tube does not allow this operation).
fuel pressure = greater than 300 KPa (3 BAR)

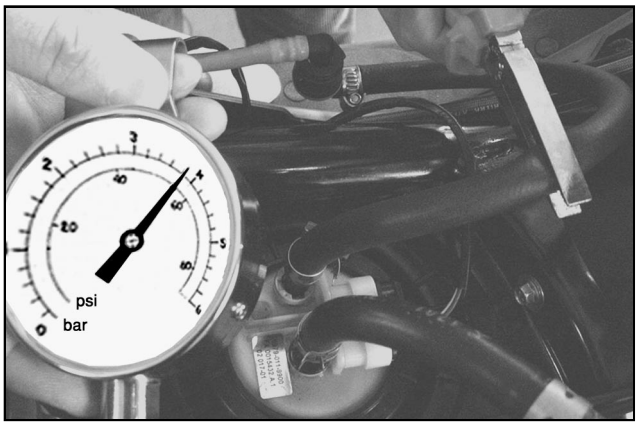

YES

NO

YES

Replace the pressure regulator

See page 9-54 - pump support overhaul.

NO

Replace the fuel pump

See page 9-54 - pump support overhaul.

Pump and fuel filter control

This procedure is useful during maintenance to check the efficiency of the outlet filter.

Connect the diagnosis tester 020460Y see page 9-17.
Connect the fuel pressure control kit 020480Y see page 9-46.

Select the “ACTIVE DIAGNOSIS” function menu on the diagnosis tester.
Select the function "PUMP DIAGNOSIS".
The pump activates for 30 seconds.

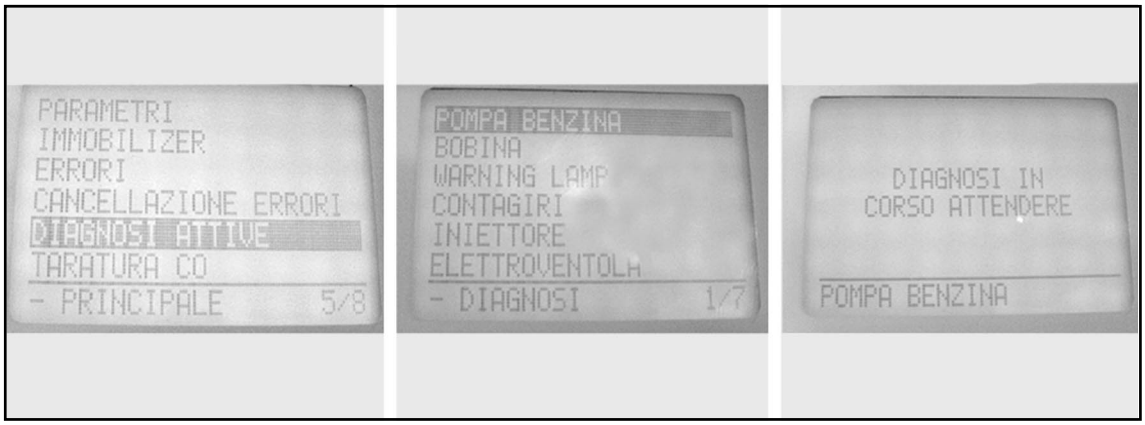

Allow to purge for a few seconds.
Check that the system has no leaks.
Using long, flat-tonged pliers, squeeze the return duct for a moment by acting only on the extention of special tool 020480Y with pump feed tension greater than 12 V, check the maximum system pressure.
maximum pressure = > 600 KPa (6 BAR)

YES

NO

9

Proceed with the system seal control

Activate the pump for 30 seconds using diagnosis tester 020460Y.
After the pump stops wait for 3 minutes.
Check the system pressure.
Fuel pressure = greater than 200 KPa (2 BAR)

NO

YES

System seal is good.

The pressure is lower

Carefully check the tension with the pump under pressure.
If tension is greater than 12 V replace the pump (see page 9-54 overhaul of the pump support).

Repeat the test. When the pump stops, using long, flat-tonged pliers, squeeze the return duct acting only on the extention of the special tool. This action leads to an increase in fuel pressure.

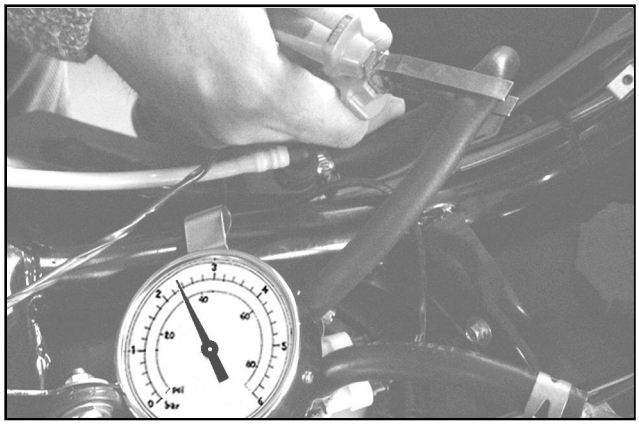

Check if the pressure reduces at the same rate as when the system is not squeezed.

The pressure reduces much more slowly

Replace the pressure regulator (see page 9-54 overhaul of the pump support).
Check system seal again

Rate variations are not evaluated

Repeat the test by squeezing the tube of the special tool 020480Y in the tract between the derivation and the injector. Check if pressure reduces at the same rate as when the system is free.

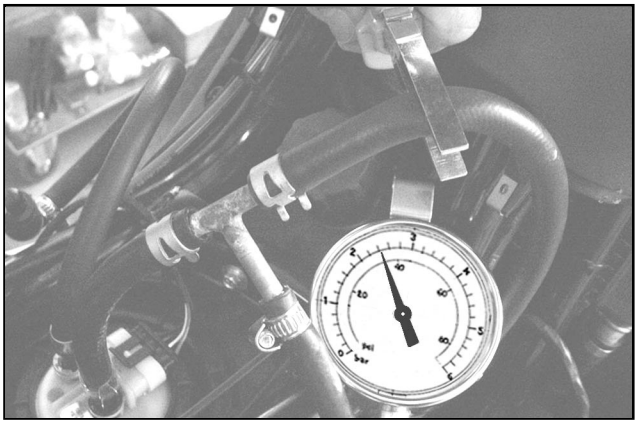

The pressure reduces much more slowly

Proceed with controls and possible replacement of the injector due to insufficient seal (see page 9-62 and Chapter. 7-THERMAL UNIT AND TIMING SYSTEM).

Rate variations are not evaluated

Repeat the test by squeezing the tube of the special tool 020480Y in the tract between the derivation and the injector. Check if pressure reduces much more slowly.

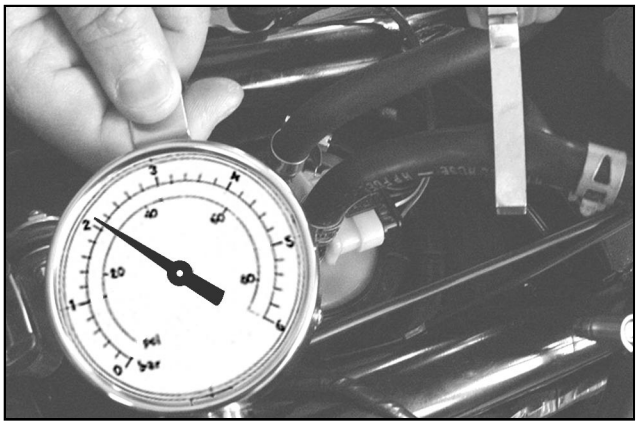

YES

The unidirectional pump valve is defective Replace the pump (see page 9-54 - overhaul of the pump support).

NO

Check seal of the tubes and the injector. joint more accurately. If necessary repeat seal controls of the components.

NOTE: poor system seal only prejudices readiness at ignition stage.

Check the free flow capacity

Disconnect the pump connector, start the engine, wait for it to stop, reconnect the connector. Disconnect the fuel return duct from the pump support (left hand tube).

Insert the return duct in a measuring container. Using the diagnosis tester 020460Y, activate the fuel pump for 10 seconds. Ensure that feed tension is greater than 12 V. Measure the quantity of fuel distributed.

Free flow capacity of the pump = 300 - 320 cc.

YES

The fuel filter is not clogged. It is possible to continue using it respecting the 48000 Km limit.

NO

The flow capacity is lower than 250 cc.

The fuel filter is dirty. Proceed with replacement of the pump support (see page 9-54).

Pump electrical controls

Resistive check

Disconnect the pump support connector. Using a tester measure the resistance of the pump windings.
Connect the tester prods to the pump support pins as shown in the figure.

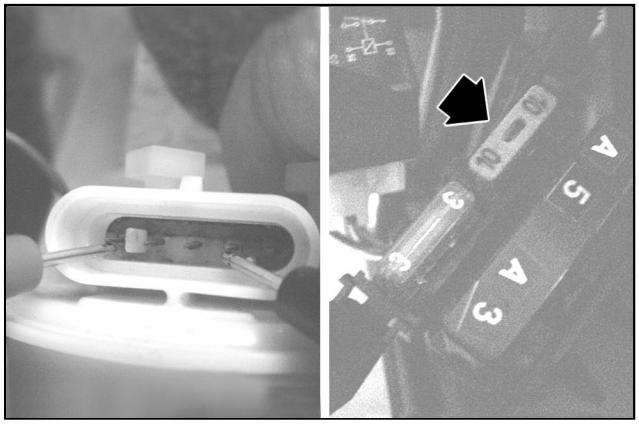

Resistance = ~1.5 Ω

On meeting with infinite resistance replace the pump.
With infinite resistance, the pump will not turn.
With resistance close to 0 W the pump absorbs excessively with the possibility that the 10 A fuse n° 2 will burn out. Proceed with controls as below.

Pump absorption control

Pump absorption may vary depending on:
- feed tension
- running-in of the pump
- adjusting pressure
- cleanliness of the delivery filter

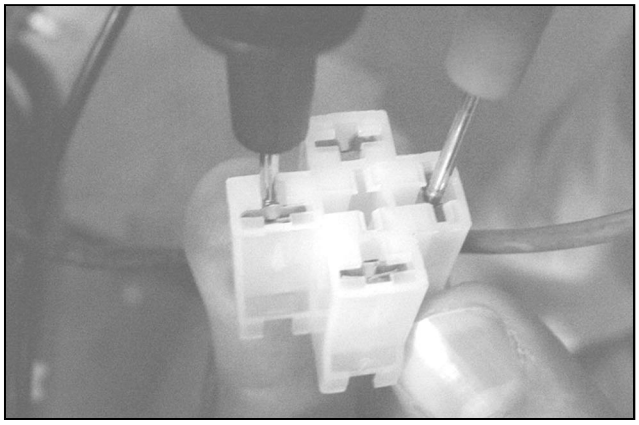

To carry out a control of the current absorbed, proceed as follows:
- disconnect the pump command electromagnetic switch connector
- with the ignition key set to "OFF", jump 30-87 to the connector using the tester prods in amperometer function (see figure).
- check the pump revolution and its absorption

Current absorbed = ~ 3.5 - 4.2 A

NOTE: this absorption refers when:
- feed tension = ~ 12 V
- pump run-in
- system pressure = 300 KPa (3 BAR)
- clean fuel filter

A dirty filter causes absorption increase.
If the overpressure valve is opened the pump absorbs ~ 6-7 A

If excessive absorptions are revealed (> 5A) proceed with replacement of the filter. See page 9-54 overhaul of the support pump.
If the anomaly persists replace the pump.

Fuel filter control

For the fuel filter control, check:
- Free flow capacity. See page 9-52
- Current absorbed by the pump. See page 9-53

An obstructed filter causes:
- Performance decline, especially at full power
- Increased pump absorption

NOTE: Do not blow the filter with compressed air.
A damaged filter may cause blocking of the injector.

Pump support overhaul

To remove the pump support from the tank, proceed as follows:

- Disconnect the electrical connection
- Start the engine and wait for it to stop spontaneously
- Clean the tank and the pump support (if necessary wash and blow dry with compressed air)
- Disconnect the delivery and return pipes by means of the quick-connections (see page 9-46)

Warning - Expect possible sprays of fuel.

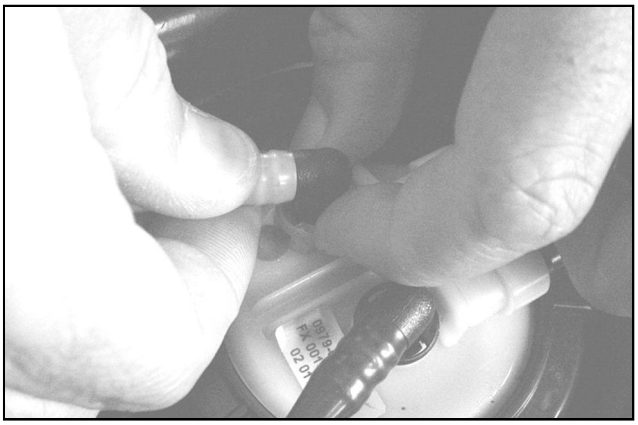

- Unscrew the pump support fixing ring nut (right-threaded twist)

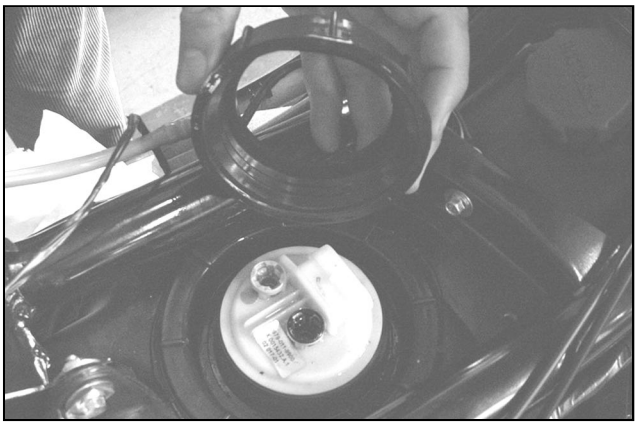

- Remove the pump support and the gasket

NOTE: carry out the extraction operation paying attention not to bend the float arm.

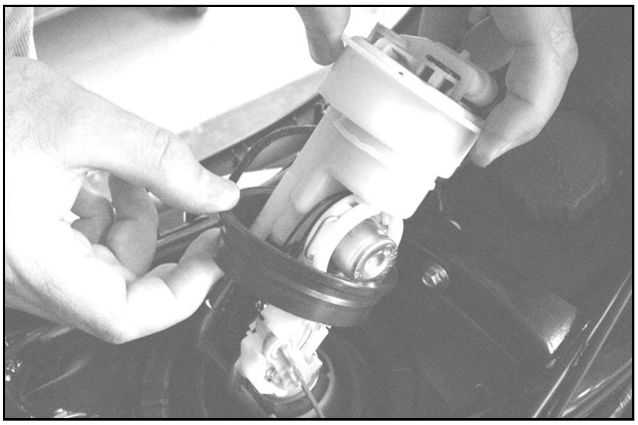

For the replacement of components proceed as follows.

(**1**) Level indicator:
- Take note of the mounting position and course of the two connecting wires.
  pos 2 = wire connected to the circuit
  pos 3 = wire connected to the moving arm

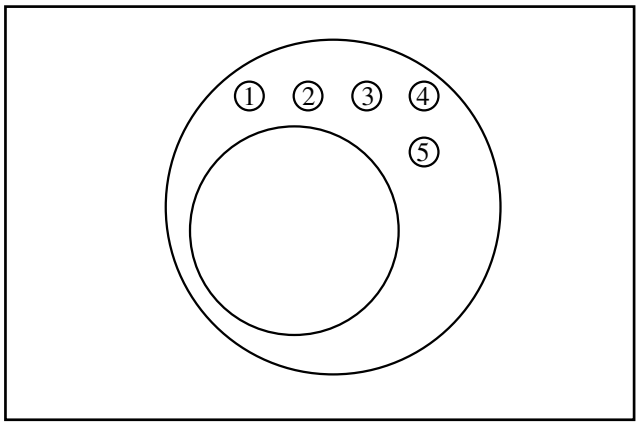

The wires must pass through the hole made between the filter and the pressure regulator.

- Disconnect and pull out the wires
- Using a screwdriver on the stop tang as shown in the figure, pull the level indicator out from the support.

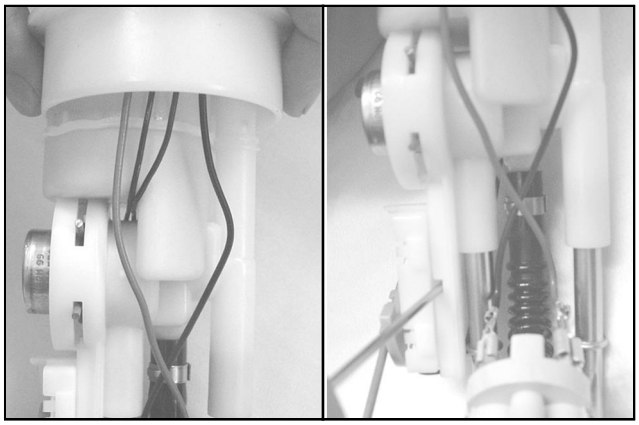

- Indicator level control
  The control can also be carried out before dismantling from the support.
  Measure resistance between the two wires of the indicator level.
  Moving the arm with float, check that the resistance is subjected to progressive variations with the arm movement.
  Value limits
  empty tank position = 95 - 105 Ω
  full tank position = 0 - 9 Ω
- For reassembly follow the dismantling procedure in the reverse order.

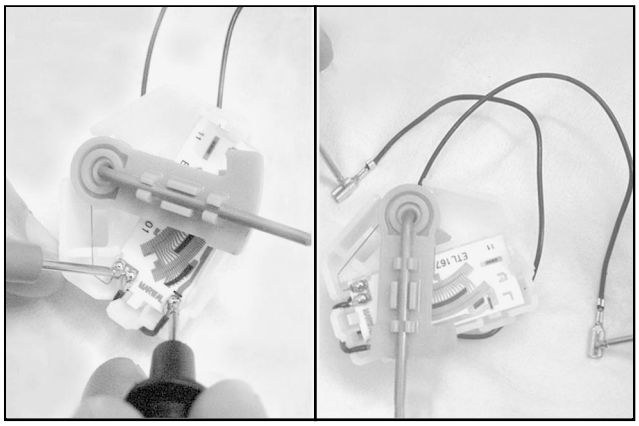

(**2**) Pressure regulator:
- Remove the spring clip
- Pull out the pressure regulator complete with its fixing rings.

NOTE: to overcome resistance of the O rings, lever with a screwdriver using the openings cut into the side where the clip is inserted.

- For the reassembly, grease the O rings and assemble in the disassembly reverse order.

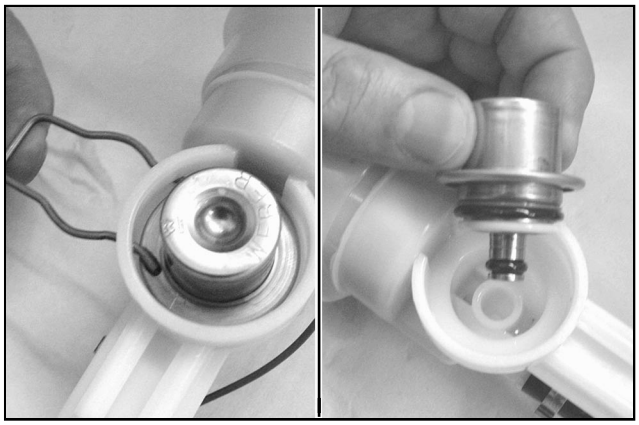

(**3**) Fuel pump
- Take note of the position of the feed wires on the support
  pos 1 = positive (red)
  pos 4 = negative (black)

NOTE: the pump connections are not interchangeable.

- Disconnect the feed wires

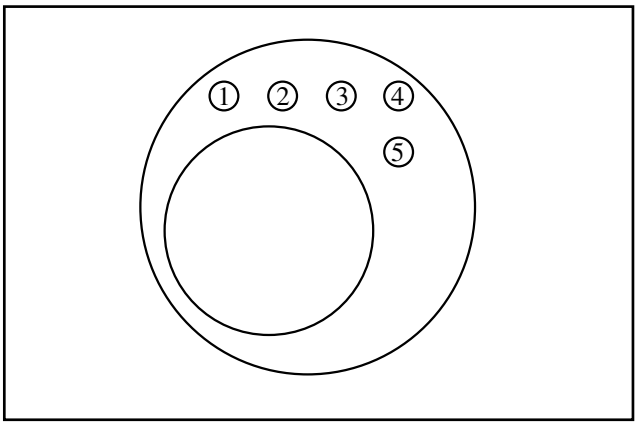

- Cut the hose clamp from the delivery pipe on the support

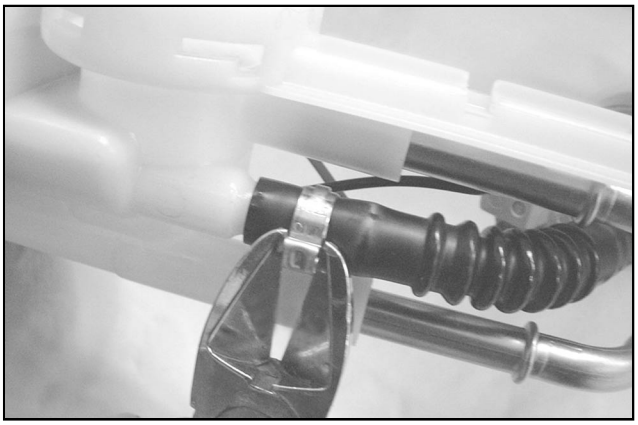

- Remove the fixing washer from the pump

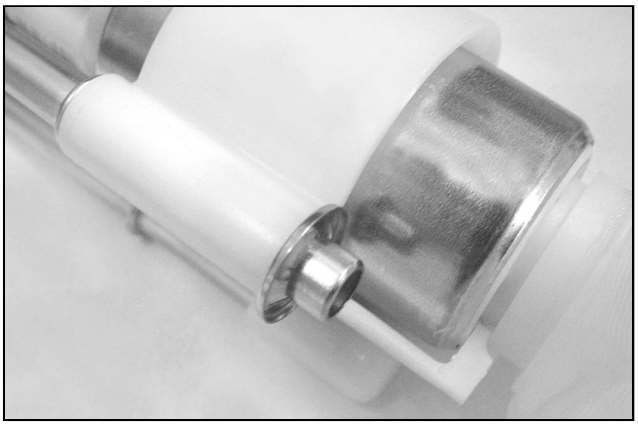

- Remove the tube from the filter attachment
- Remove the pump complete with ring support and prefilter

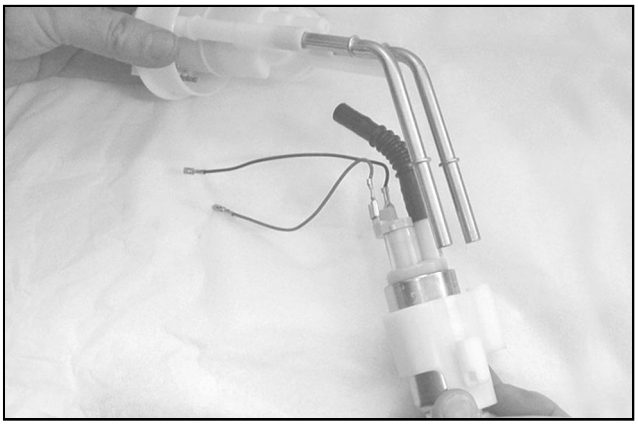

- If the pump is to be replaced, remove the prefilter and ring support.
- For the reassembly follow the dismantling procedure in the reverse order using a new clamp for the delivery pipe and a new fixing washer for the pump.

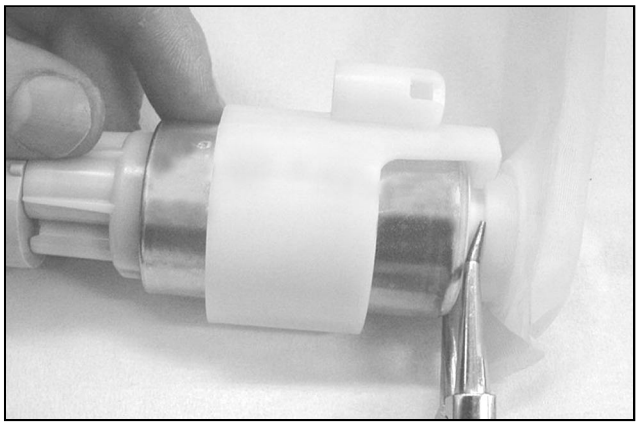

NOTE: To clean the prefilter use fuel and compressed air.
Place the pump correctly.

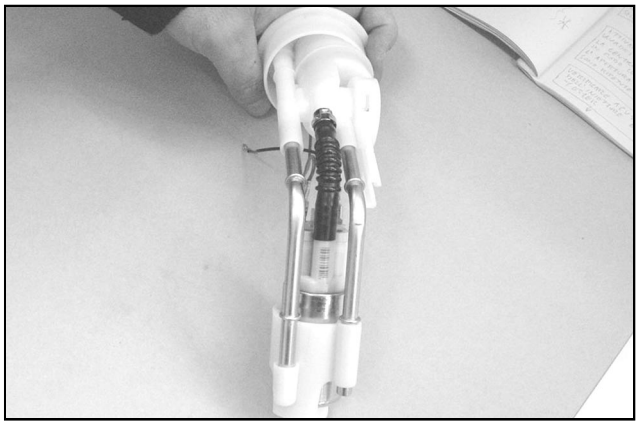

(**4**) Fuel filter
The fuel filter is supplied ready-assembled with the pump support.
For replacement of the support it is necessary to transfer the level indicator, the pressure regulator and the pump from the old to the new support.
For these operations the instructions described above must be respected.

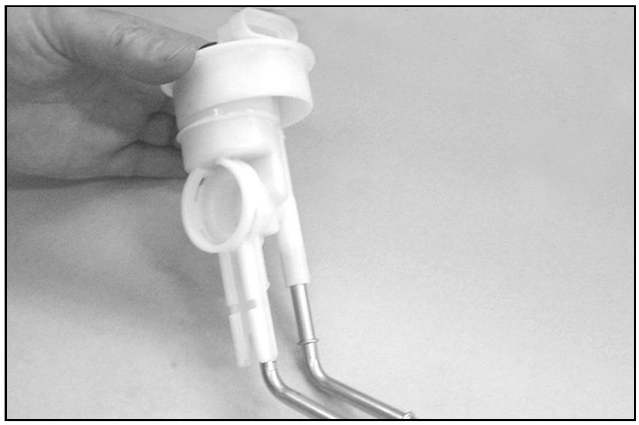

Installation of the pump support on to the tank

- Before proceeding with the reassembly check the cleanliness of the tank accurately.
  If traces of dirt or water are found proceed with dismantling of the tank.

- Install the gasket on the pump support
- Insert the pump into the tank taking care to not bend the arm of the level indicator.

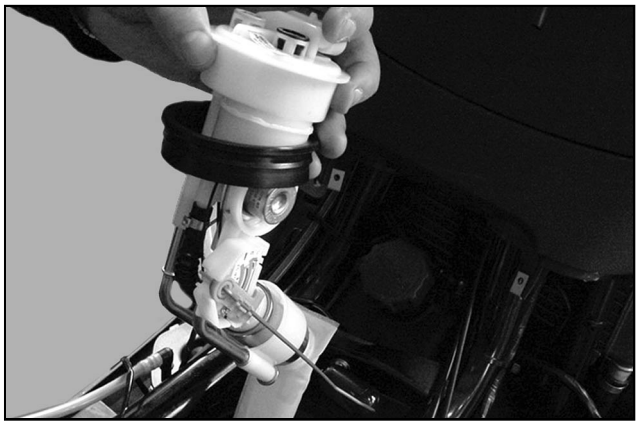

- Position the gasket on the tank.
- Install the pump support into its seat taking care to align the connector with the longitudinal axis of the vehicle.

NOTE: incorrect orientation may compromise the functioning of the level indicator.

- Screw the fixing ring nut fully on.

Tightening torque:
Electropump locking ring nut 20 N·m

- Reconnect feed circuit tubes, checking correct insertion via upwards traction and rotation.
- Reconnect the electrical connection.
- Reload the system with at least 4 - 5 timings (key switch OFF-ON)

NOTE: do not activate the pump without fuel in the tank. Failure to respect this regulation causes damage to the pump.

- Check the seal of the quick-connections of the supply system.

Injector circuit control

Terminals	Conditions	Standard
13-23	During timing of the pump with the engine stopped	Battery tension

CIRCUIT DIAGRAM

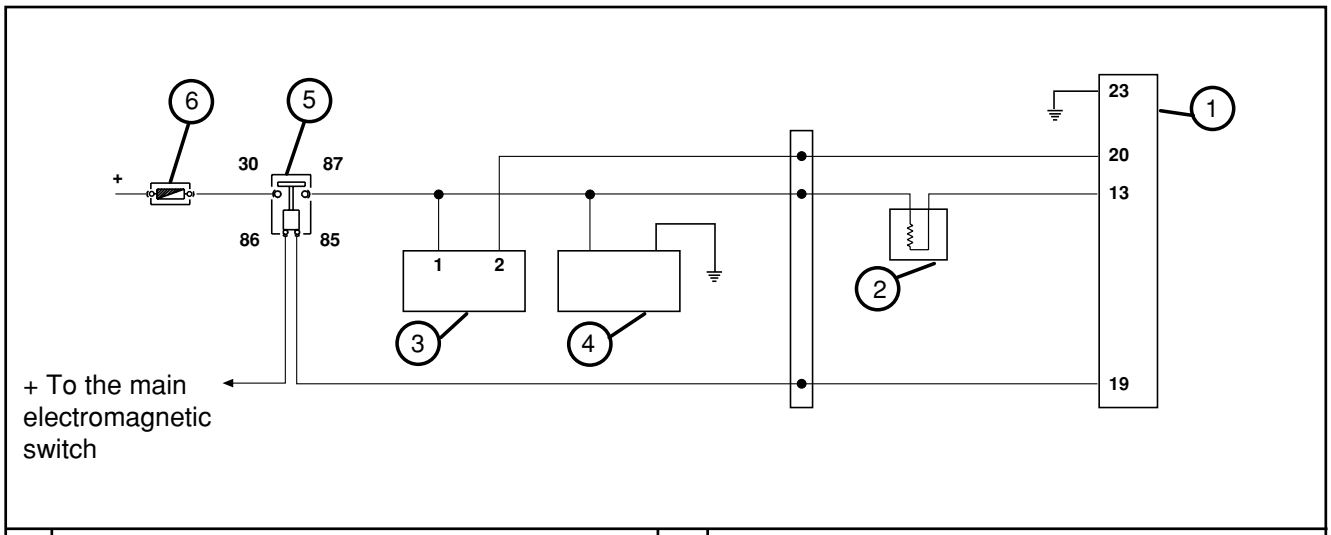

1	ELECTRONIC CONTROL UNIT	4	PUMP
2	INJECTOR	5	CONTROL UNIT ELECTRMAGNETIC SWITCH
3	HV COIL	6	10A FUSE

Connect the diagnosis tester 020460Y
(see page 9-17)
Select the "active diagnosis" function on the menu
Select the "injector diagnosis" function.

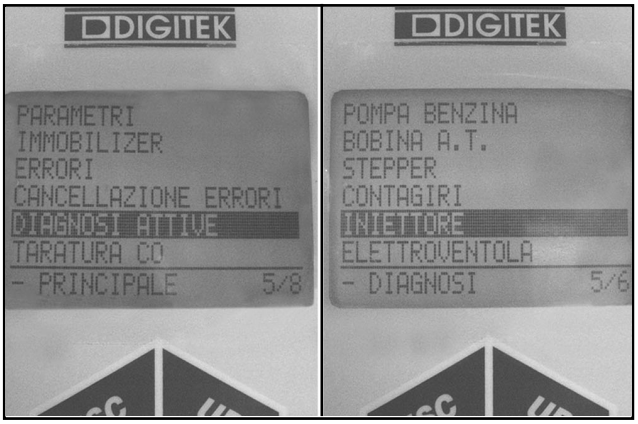

Activate the function with under-panel feed inserted and the engine stopped.
The control unit commands the fuel pump constantly and at the same time activates opening of the injector. The injector openings are repeated for a few seconds.

Acoustically check the injector openings and await the tester result.

4 injector openings are revealed.
The fuel injection tester responds “test completed successfully".

The injector control circuit is efficient. Proceed with injector hydraulics control.

No injector openings are revealed.
The fuel injection tester responds "test failed".

No injector openings are revealed.
The fuel injection tester responds "test completed successfully".

The injector control circuit is efficient. Repeat the acoustic check and to be even more certain, proceed with the Injector hydraulics control
(see page 9-62)

Select the “ERRORS” function from the menu.
Check if only the injector damage is present.

NO

YES

NO

9

Damage is also indicated as being present:
- relay pump

Control the relay pump control circuit
See: pump feed circuit.
(see page 9-40)

damage is also indicated as being present:
HV coil

Control the feed circuit with the 10A fuse
and the electromagnetic switch.
Feed to the fuel pump is regular.
(see: pump feed circuit page 9-40)

YES

Install the special tool 020481Y between the control unit and fuel injection system (see page 9-8)

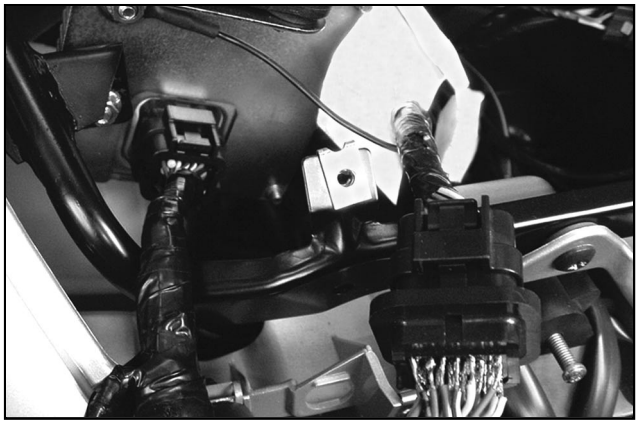

Arrange the multimeter with the positive prod on pin 13 and the negative prod on pin 23.
Set to "ON" with the switch on "RUN" and the side stand raised.
Check the presence of battery tension during timing of the fuel pump.

13-23 = battery tension for 2 seconds.

YES

NO

The electrical circuit of the injector is continuous.
Repeat checks.
If the anomaly persists check the control unit connector.
If necessary replace the control unit.

NO

Disconnect the connector between the vehicle system and the fuel injection system.
Disconnect the connector to the control unit.

Check resistance between pin 13 and the terminal of the black-green wire on the connector fuel injection system side.

13-black-green = 14.5Ω ± 5% (injector resistance)

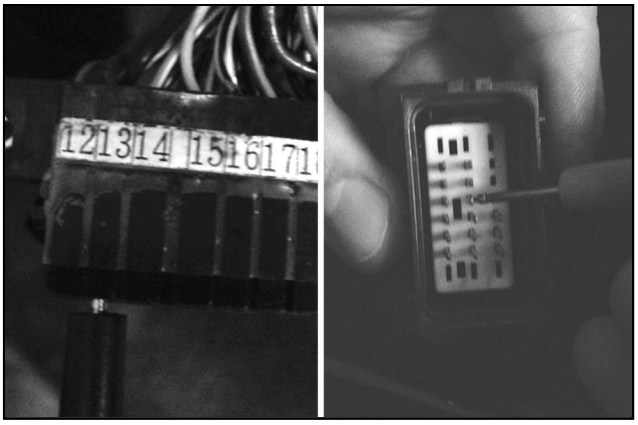

YES

Check continuity of the black-green wire in the vehicle system section.
Check the connector accurately between vehicle system and fuel injection system.
Repair or replace the harness.

Check the earthing isolation of the negative wire of the injector.
Control unit and injector connectors disconnected

13-23 = Ω infinity

NO

Repair or replace the harness

NO

There is no continuity
Disconnect the connector and repeat resistance controls directly on the injector terminals.
Resistance =14.5Ω ± 2%

YES

NO

9

YES

Check continuity between:
- injector feed connector (red-yellow) and pin 13.
- injector feed connector and black-green wire terminal on the connector between the vehicle system and the fuel injection system.

Reset continuity or replace the harness.

NO

Replace the injector

Injector hydraulics control

To carry out injector control, it is advisable to proceed to dismantling of the air-intake manifold Complete with throttle body and injector.
Dismantle the injector from the collector only if it proves necessary.
For these operations see Chapter. 7-THERMAL UNIT AND TIMING SYSTEM

Connect the diagnosis tester 020460Y (see page 9-17). Use the socket in the saddle compartment.

Install the special tool 020480Y from the fuel pressure control kit. See page 9-46
In this case the injector may be connected directly to the quick-connections of the tool.

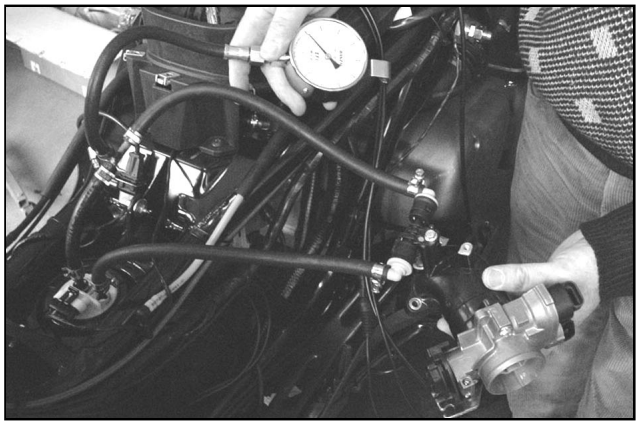

Prepare a measuring container of at least 100 cm^3 with a resolution of 10 - 20 cm^3

Connect the injector to the wire forming part of the fuel injection tester kit .
The wire is supplied with crocodile terminals for direct connection to the battery.
Prepare an auxiliary battery.

Set to "ON" with switch on "RUN" and side stand raised.
Select the "diagnosis active" function.
Activate pump diagnosis.

During the 30 seconds of pump diagnosis, feed the injector via the wire and the auxiliary battery for 15 seconds.
Using the measuring container, collect the fuel distributed from the injector.

Supply pressure = 300 KPa (3 BAR)
Quantity supplied = around 40 cm^3

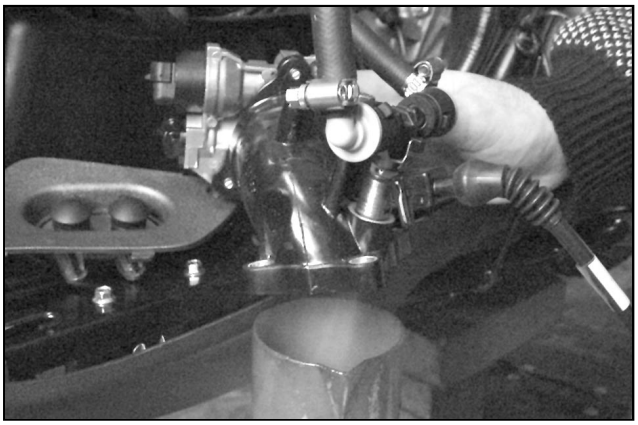

YES

NO

Higher quantities are not plausible.
For lesser quantities proceed with replacement of the injector. (see Chapter. 7-THERMAL UNIT AND TIMING SYSTEM)

Proceed with the injector seal test.
Dry the injector outlet with a jet of compressed air.
Activate the fuel pump. Wait one minute, check that there is no loss from the injector outlet. A slight oozing is normal.

Limit value = 1 drop per minute

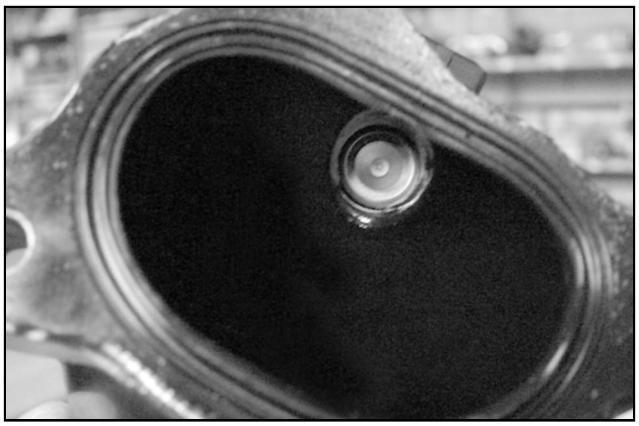

NO

Repeat the test. If the anomaly persists replace the injector. (see Chapter. 7-THERMAL UNIT AND TIMING SYSTEM)

YES

The injector is conformant

9

Atomization of the injector cannot be checked with simple systems. The injector is supplied with 5 holes whose gradient form gives a jet with taper of around 80°. Formed in this manner, the jet covers both the air intake valves.

NOTE:

- An injector with low flow capacity influences the maximum performance.
- And injector with poor seal mainly influences idling and ignition characteristics after parking briefly with the engine warm.
- On discovering occlusion of the injector, proceed with replacement of the injector, filter and the fuel tank contents. Clean the system and the tank accurately.

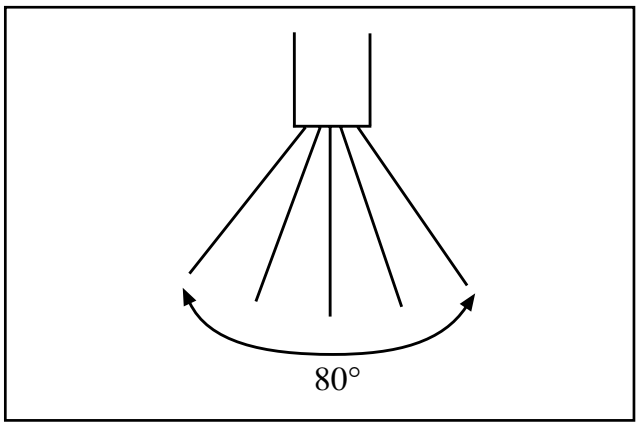

REVOLUTIONS SENSOR

Terminals	Conditions	Standard
7-12	Starting speed	0,8 - 4.5 V~

CIRCUIT DIAGRAM

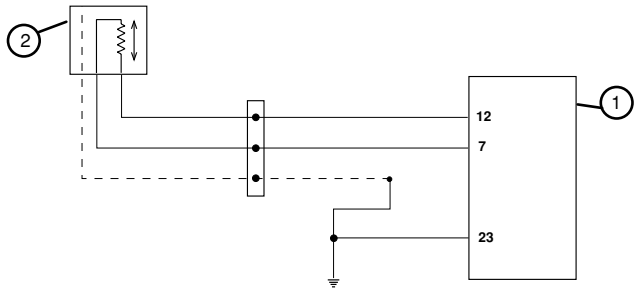

1	CONTROL UNIT SENSOR	2	ENGINE REVOLUTIONS

The sensor allows recognition of the revolutions and the angular position of the driving shaft with reference to the TDC. As the phonic wheel is keyed on the camshaft it is also possible to recognize the 4-stroke cycle. This solution allows command of the injector and spark plug every 2 revolutions of the driving shaft.
The sensor is of the reluctance variation kind, and can therefore be assimilated to a alternate tension generator which feeds the control unit.
The signal frequency is interrupted by the vacuum generated by two cogs lacking on the phonic wheel.

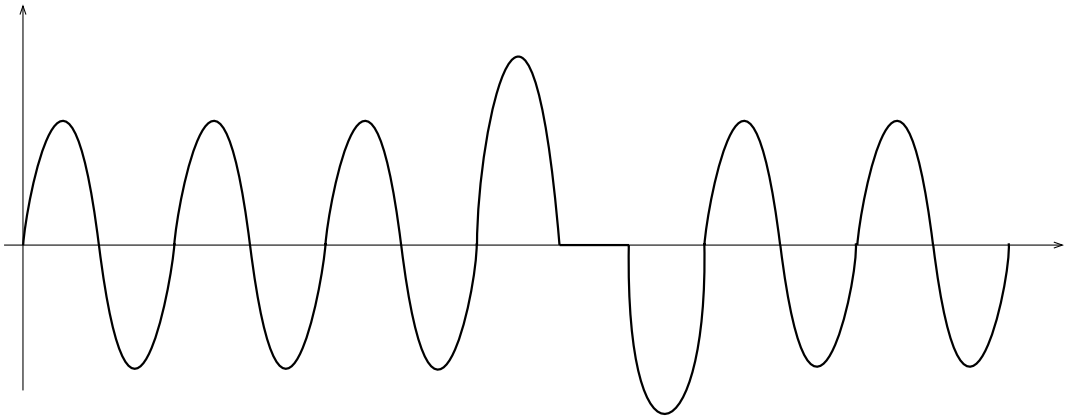

The sensor signal is fundamental in order to achieve engine ignition.
The engine may however function even with an unstable signal, due to corrective action on the control unit.

The total absence of revolutions signals does not cause the fuel injection indicator to light up.
When the signal anomaly (open circuit) occurs during use on the road, the indicator signals the start of the anomaly, blinking as follows:

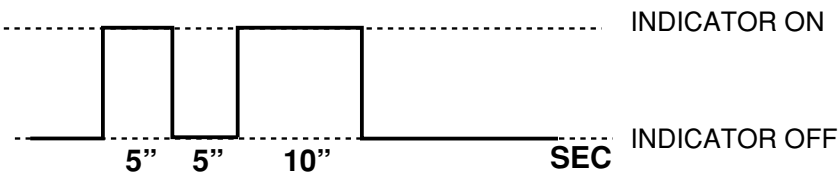

To control the sensor and related circuit proceed as follows:

Connect the diagnosis tester 020460Y. See page 9-17. Start the engine.

YES

The engine starts normally
Select the “errors” function from the menu. Check for the presence of anomalies concerning the "signals panel".

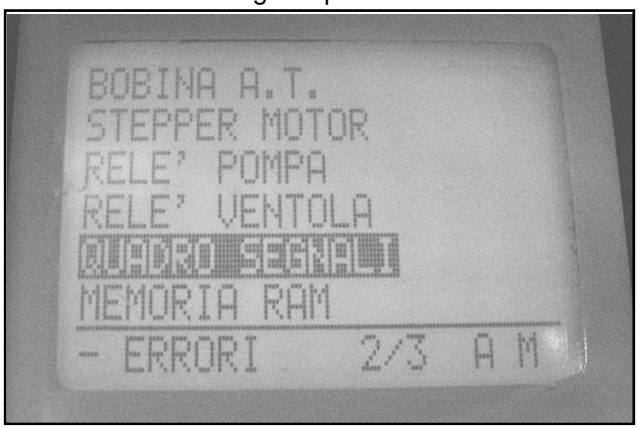

NO

Select the "parameters" function from the menu.
Check the number of
Synchronizations lost = 1 cog
Synchronizations lost = > 1 cog

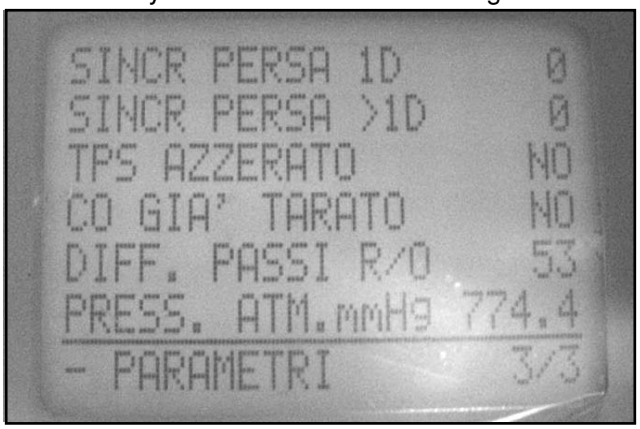

NO

Indication = 1 - 3
The phase-revolutions signal conforms

YES

IThe value increases progressively with time, insisting with engine ignition.
Check the circuit and the sensor.

NO

The engine does not start
Select the “errors” function from the menu.

NO

No anomaly is revealed.

YES

Proceed according to the indication revealed

YES

9

YES

Install the connection harness between the control unit and the fuel injection system. Tool 020481Y.
See page 9-8
Do not carry out connection with the control unit.

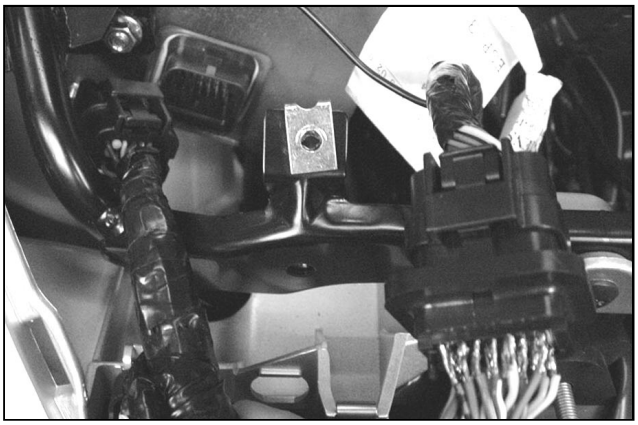

Disconnect the connection between the phase-revolutions sensor and the fuel injection system.
Measure the resistance of the sensor connecting the multimeter between the terminals marked ⊕ and ⊖ .
Phase-revolution sensor resistance =680 Ω±15%

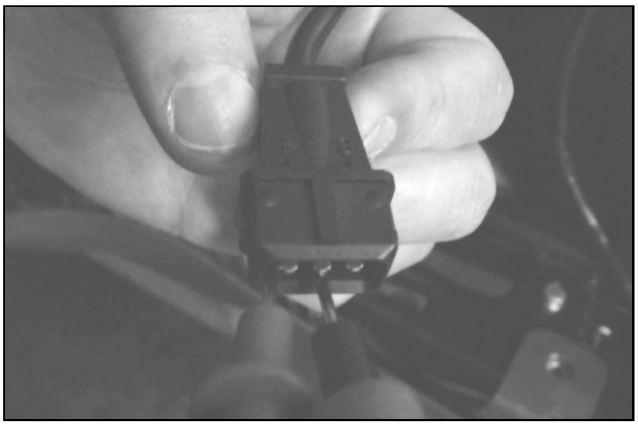

YES

Check the earthing isolation between one pole and the shielding.

Ⓢ-⊕ = infinity (>1MΩ)

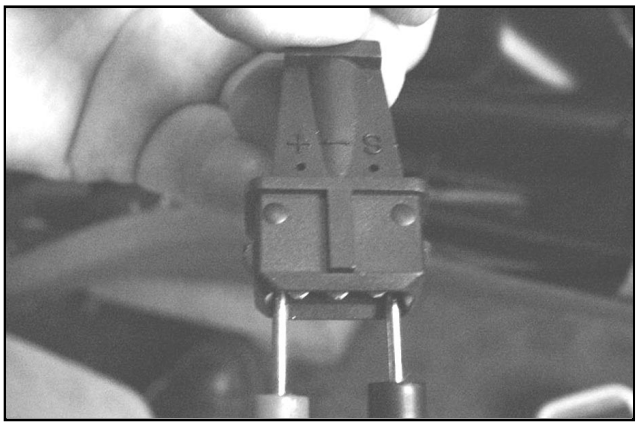

NO

Replace the revolutions sensor.

YES

NO

YES

Reconnect the phase-revolutions sensor.
Repeat resistance control through the fuel injection harness on pins 7 - 12.
7-12 = 680 ± 15 %
The value must be very near to that revealed directly to the sensor.

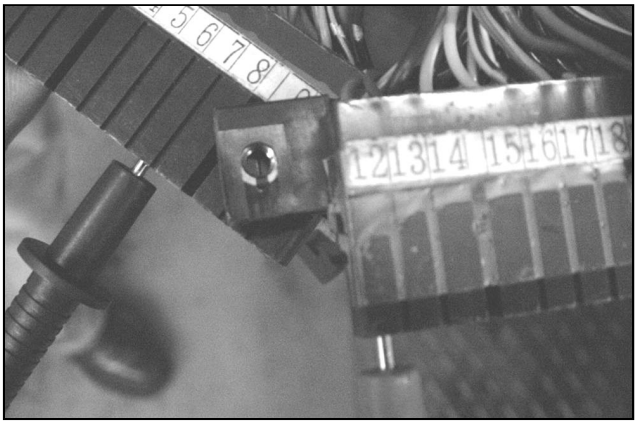

NO

Greater or infinite resistance.
Control the connectors accurately.
Disconnect and check continuity between the connector and pins 7 and12
Connector-7 = continuity
Connector-12 = continuity
Repair the connectors or replace the harness.

NO

Resistance 0 Ω
Repair or replace the fuel injection harness (short circuit)

YES

Check the earthing isolation again.
7-23 = infinity (>1MΩ)

YES

Measure the alternate tension between pins 7 and 12 with the engine in starting speed.
7-12 = 0.8 - 4.5 V~eff
Revolutions speed = ~300-400 rpm

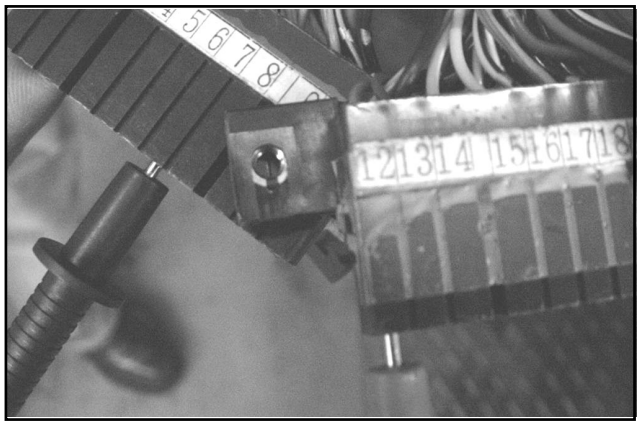

NO

Check the sensor and control unit connectors.
Repair or replace the fuel injection harness

YES

The sensor circuit conforms.
If the anomaly of failed ignition persists, replace the control unit.

NO

Check the air gap and magnetic activity of the sensor.
See: Chapter. 7-THERMAL UNIT AND TIMING SYSTEM
If magnetic activity is zero, replace the sensor.

NOTE
- During repairs install the sensor cable correctly .
- Do not force the cable.
- A poor shielding of the cable may prejudice the functioning of the engine at high speed.

9

HV COIL

Terminals	Conditions	Standard
20-23	During pump timing with engine stopped	Battery tension

CIRCUIT DIAGRAM

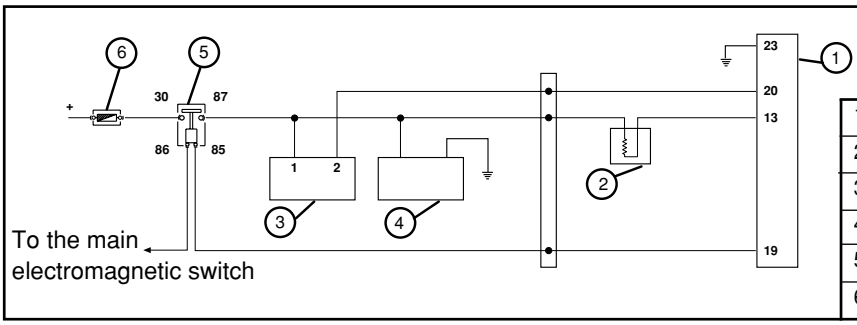

1	ELECTRONIC CONTROL UNIT
2	INJECTOR
3	H.V. COIL
4	PUMP
5	CONTROL UNIT ELECTROMAGNETIC SWITCH
6	10A FUSE

The ignition system integrated with the fuel injection is of the high-efficiency induction type.
The control unit controls two important parameters:

- Spark advance
  This is optimized on the spot on the basis of engine revolutions, engine load, temperature and environmental pressure.
  With the engine idling, it is optimized to achieve speed stability at 1450 ± 50 rpm.
- Magnetization time
  The magnetization time of the coil is controlled via the control unit.
  The ignition power is increased during the engine starting phase

The fuel injection system recognizes the 4-stroke cycle, and so ignition is commanded only during the compression phase.

To control the ignition circuit proceed as follows:

Connect the diagnosis tester 020460Y
(see page 9-17)
Activate the HV coil control with the commutator set to "ON", switch on "RUN" and side stand raised.
Await the response of the tester.

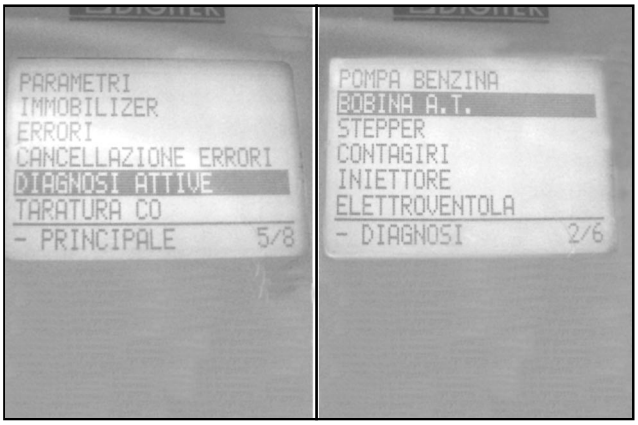

Test completed successfully

Test failed

Select the “errors” function from the menu.
Check for the presence of current or memorized errors with respect to the HV coil

Repeat the test

Test failed

NO

YES

NO

The coil circuit control is efficient.

Proceed with secondary control of the della HV coil, cable and shield cover (see page 9-68 and 9-72)

YES

Install the connection harness between the control unit and fuel injection Special tool 020481Y (see page 9-8)

Measure the tension between pins 20 and 23 of the special tool during the fuel pump timing phase.
To activate timing set to "ON" with switch on "RUN" and side stand raised.
20-23 = Battery tension (matched with pump revolution - 2 sec.)

If an increased time available for the test is desired, activate the "relay pump diagnosis" function (30 seconds)

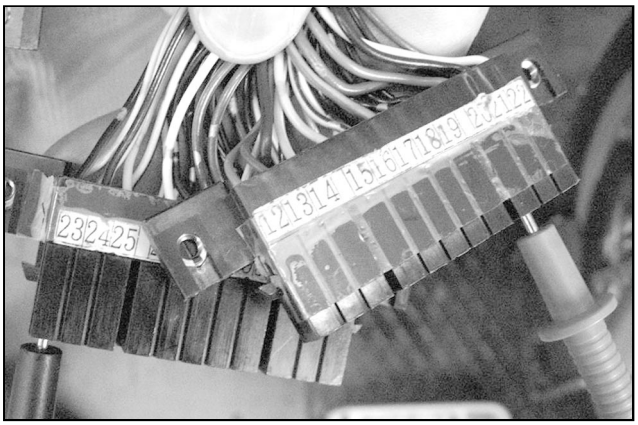

YES

The coil primary control circuit is efficient.
Check the connections with the control unit and coil accurately.
If necessary proceed with replacement of the control unit.

NO

Disconnect the connection with the HV coil primary
Repeat the tension control between the black-green wire and the earth.
Black-green-23 = battery tension
(matched with pump revolution -2 seconds)

NO

Check continuity of the black-green wire.
Repair or replace the harness.
NOTE: any anomaly of the command electromagnetic switch would lead to failed pump turning. (see page 9-53)

YES

9

<u>Positive feed conforms.</u>
Check continuity between the pink-black wire of the connector and pin 20
pink-black-20 = Continuity

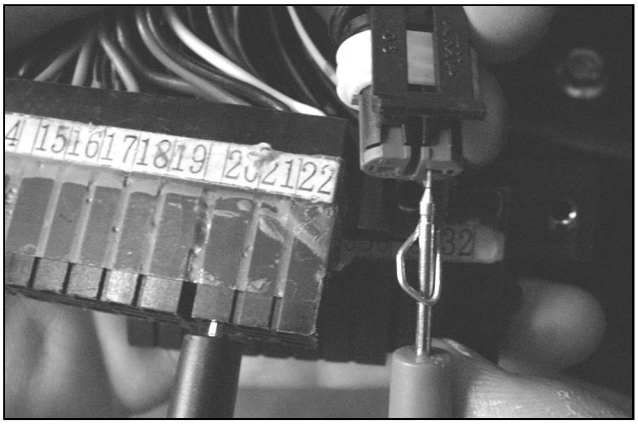

NO

Disconnect the connection between the vehicle System and fuel injection system.
Check continuity of the pink-black wire in the two systems.
Pink-black (coil connector)-(system connector) = Continuity
Pink-black (system connector)-20 = Continuity

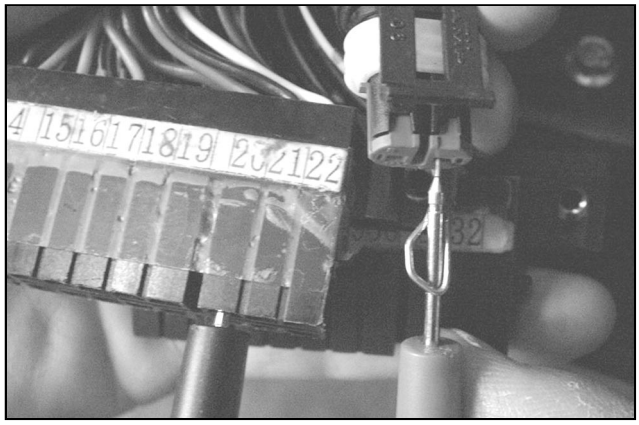

NO

Reset or replace the system concerned.

Repeat the control using "active diagnosis" from the menu

YES

Check the earthing isolation of the negative wire.
20-23 = Ω infinity (>1MΩ)

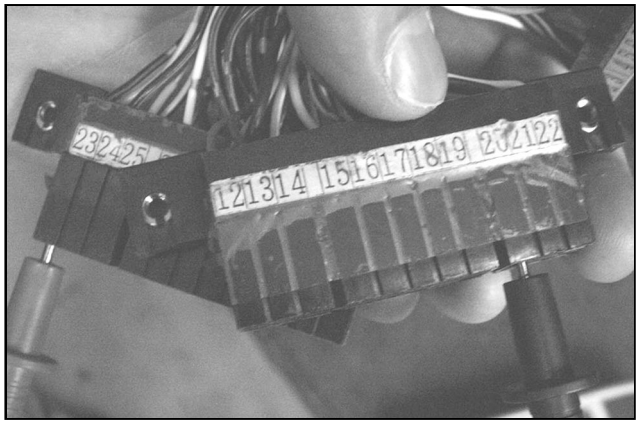

YES

NO

NO

Disconnect the connector between the vehicle system and the fuel injection system.
Repeat control of the earthing isolation in the two sections.

Repair or replace the harness concerned.

Repeat control using “active diagnosis” from the menu for HV coil command simulation.

Cancel the errors present in memory.

YES

Check continuity of the HV coil primary
See diagram

Resistance of the primary = 0,5Ω ± 8%

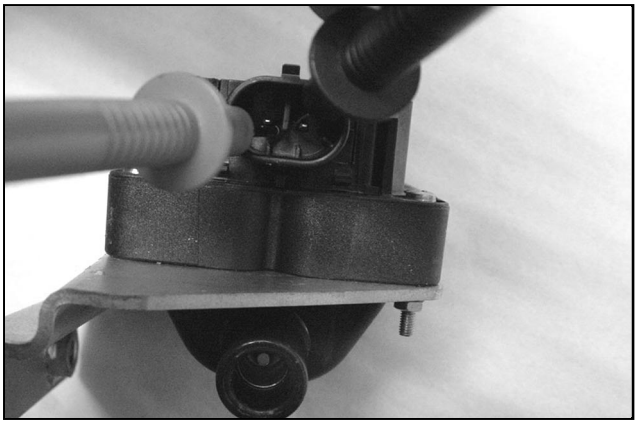

YES

Check the earthing isolation of the primary circuit
Measure between one of the two terminals of the primary and the earth.
Primary-earth = Ω infinity (>1MΩ)

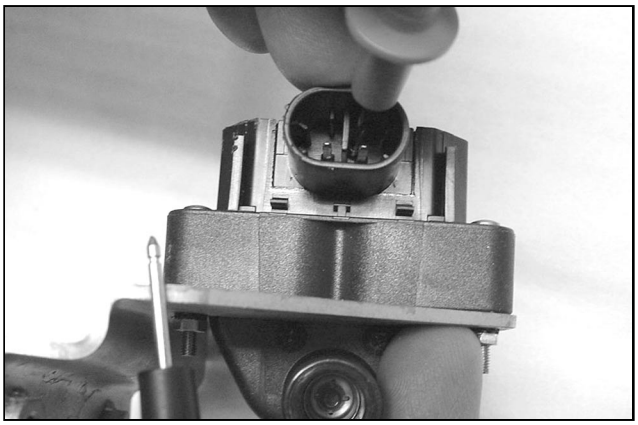

YES

NO

NO

SI

Check the resistance of the secondary
Measure the resistance between one of the two terminals of the primary and the spark plug cable outlet.
Primary-HV cable outlet = 3.1KΩ ± 9%

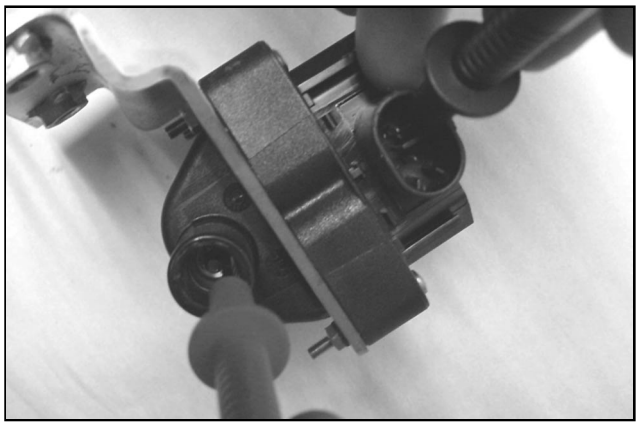

YES

The coil conforms.

NO

NO

NO

Replace the coil.

Shielded cap control

Measure the resistance of the shielded cap
Resistance = 5 KΩ
If substantially different values are obtained (<1 ; >20KΩ), proceed with replacement.
NOTE
The lack of shielding on the cap or spark plug may lead to problems in the fuel injection system.

For full information concerning the spark plug, see the chapter "Maintenance" Chapter. 1 - GENERAL INFORMATION AND MAINTENANCE.

IGNITION TIMING

The spark advance is determined electronically on the basis of known parameters from the control unit.
For this reason it is not possible to state reference values based on the number of engine revolutions.

The spark advance value can be obtained at any time by means of the diagnosis tester 020460Y.
Using stroboscopic lamp 020330Y it is possible to check if the spark advance, determined by the fuel injection system, corresponds to that truly activated on the engine.

Proceed as follows:
- Remove the transmission box cover. See chapter 3 - AUTOMATIC TRANSMISSION

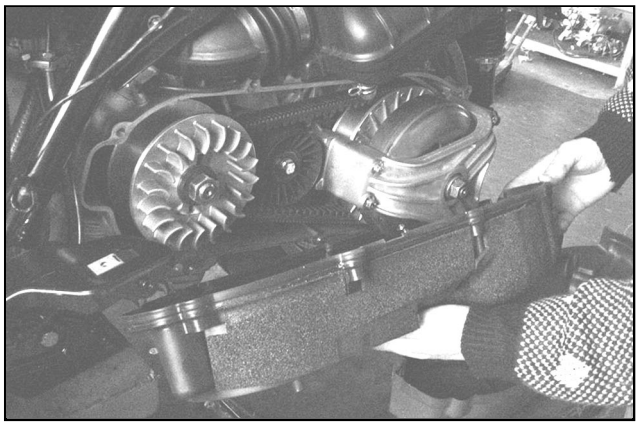

- Remove the plug for inspection of the TDC reference made between the flywheel and the cover crankcase. See chapter 5- FLYWHEEL HOUSING.

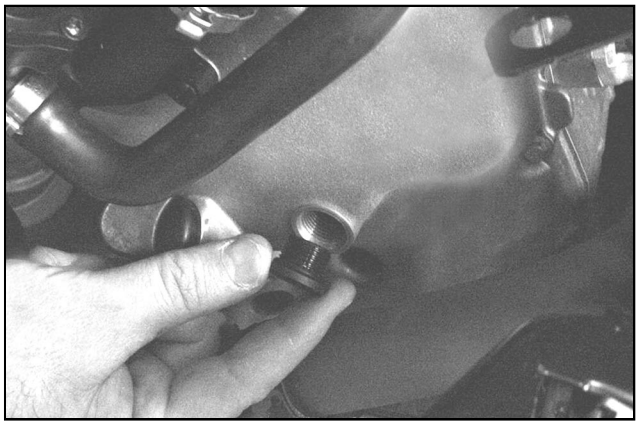

- Using the driving pulley, rotate the engine until the reference alignment to identify the TDC is found.

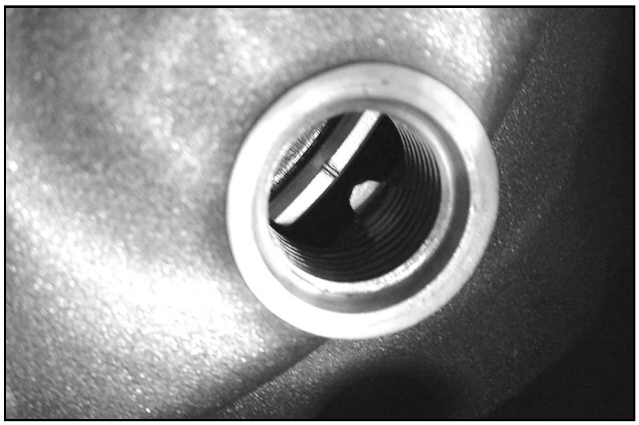

- Reproduce the reference between the driving pulley and the engine crankcase See figure.

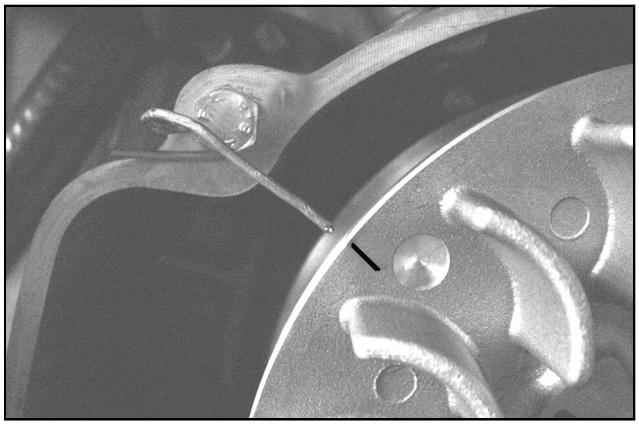

- Reassemble the flywheel side inspection plug.
- Connect the diagnosis tester 020460Y. See page 9-17.
- Start the engine.
- Select the function from the menu "parameters".
- Select the stroboscopic lamp command in the traditional 4-stroke engine position (1 spark 2 revolutions).
- Check correspondence between the revolutions values and actual spark advance and those stated by the diagnosis tester.
- If the values do not correspond check:
  - valve gear timing
  - phase-revolutions sensor
  - fuel injection control unit

COOLANT TEMPERATURE SENSOR

Terminals	Conditions	Standard
4-22	coolant temperature	With sensor connected: 20° = 2500 ± 100 Ω 80° = 308 ± 6 Ω

CIRCUIT DIAGRAM

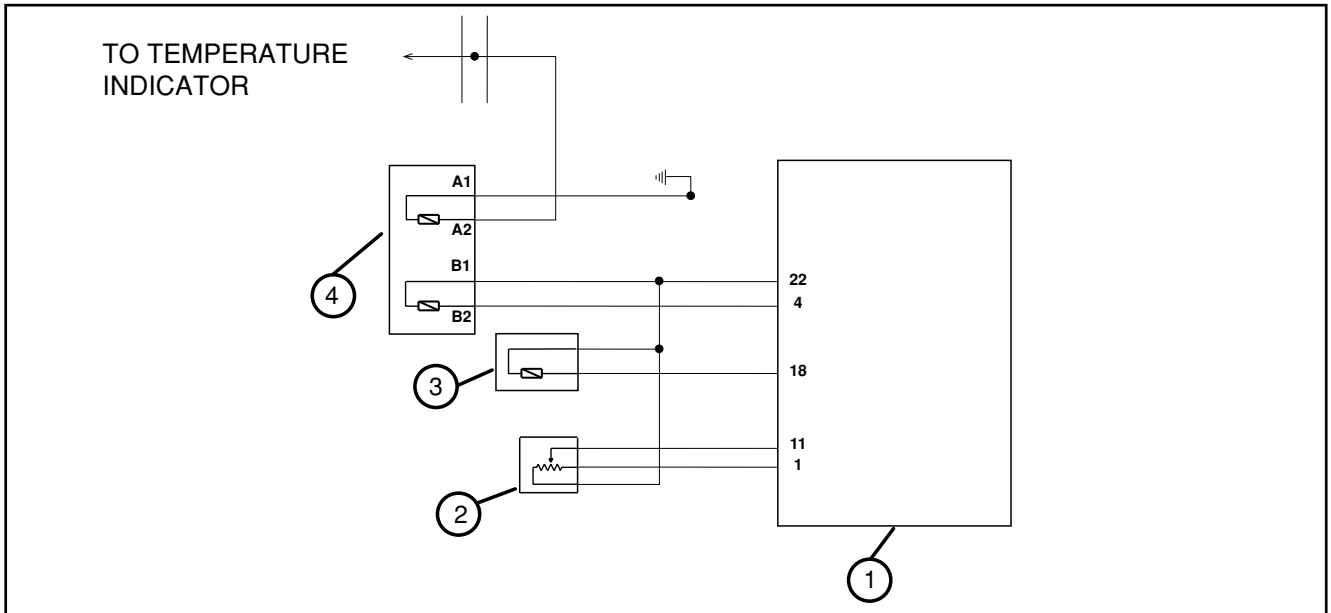

1	CONTROL UNIT	3	AIR TEMPERATURE SENSOR
2	THROTTLE POSITION SENSOR	4	COOLANT TEMPERATURE SENSOR

The coolant temperature sensor mounted on the engine head, supplies indications to the digital instrument and fuel injection.
It is constructed with two electrically distinct sections.
The fuel injection section has a NTC sensor connected with a 5V feed circuit. The resistance variation causes a circuit tension variation. This tension is linked to a temperature value.
With this information, the control unit can manage the engine functioning, optimizing it for all temperatures.
Damage to this circuit causes the fuel injection indicator to light up and protective action (amongst which continuous running of the electrical fan). Under these conditions, the engine can still function even if not at optimum standard, but always safeguarding the integrity of the catalyctic converter.
The most difficult anomaly to manage is an unreal temperature indication, but one which is comprised in the possible temperatures field. This may lead to a lack of protective action and incorrect carburation management. Such an anomaly can be highlighted more easily at ignition stage.

To check the sensor and related circuit proceed as follows.

Connect the diagnosis tester 020460Y. See page 9-17.
Select the “errors“ function from the menu.
Check if anomalies concerning the coolant temperature sensor have been registered.

NO ↓

The EMS system has not received temperature indications that are not included in the field of possible temperature.
If it is suspected that a temperature indication is incorrect, proceed in any event as indicated below.
NOTE: an incorrect temperature indication may be perceived by matching it with the analog instrument indication on activation of the electrical fan.
In all cases, before proceeding with the sensor control, check the filling and drainage of the cooling system. See Chapter. 1 - GENERAL INFORMATION AND MAINTENANCE.

YES ↓

Before proceeding with control of the sensor and related circuit, it is advisable to wait until the engine has cooled completely so that the vehicle is adjusted to the working environment temperature.

↓

Set ignition to "ON" with switch on "RUN" and side stand raised.
Select the "parameters" menu.
Do not start the engine.

↓

Check indications for:
coolant temperature
air intake temperature
ambient temperature indicated by the digital instrument
The three indications are equal or differ by little (for example 1°C).

YES ↓

The temperature sensor is probably giving a correct indication.
Proceed with control at ~80° C

NO ↓

Install the special tool 020481Y. See page 9-8. **Do not connect the control unit connector.**

↓

9

Disconnect the coolant temperature sensor connection.
Measure the sensor resistance between the terminals indicated on the diagram.
Check that the resistance corresponds with the

RESISTANCE	TEMPERATURE
9.6KΩ	-10° C
5.975KΩ	0
3.81KΩ	+10° C
2.5KΩ	+20° C
1.68KΩ	+30° C
0.3KΩ	+80° C

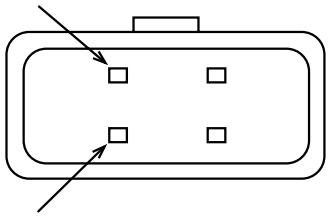

NO

Proceed with replacement of the sensor.

YES

Connect the sensor connection and repeat resistance control on terminals 4 and 22;
4-22 = Resistance equal to the value provided to the sensor.

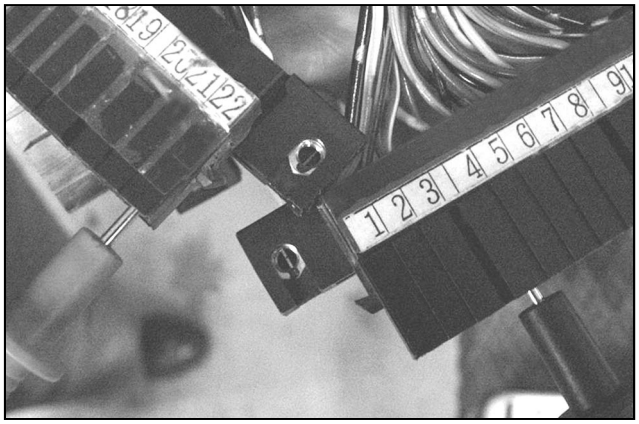

NO

On revealing slightly higher values, check the connectors.
On revealing infinite resistance (>1MΩ) check continuity of the two wires with connectors disconnected.
Bluee-white-4 = 0 Ω (continuity)
Light bluee-green-22 = 0 Ω (continuity)

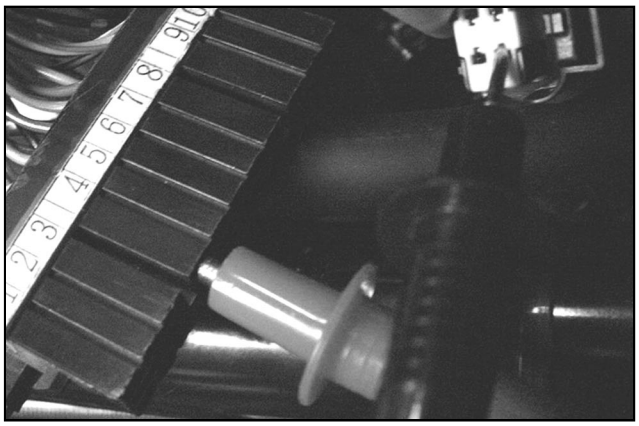

Repair or replace the harness.

YES

YES

Check that the sensor circuit is isolated from the earth.
4-23 = Ω infinity (>1MΩ)
22-23 = Ω infinity (>1MΩ)

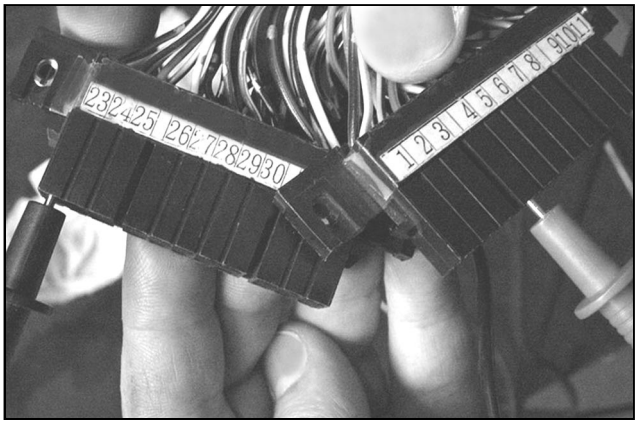

NO

Reset or replace the harness
Check the air temperature lines and throttle valve position.

YES

Connect the special tool 020481Y to the control unit.
Set ignition to "ON" with switch on "RUN" and side stand raised.

Measure the tension at terminals 4 and 22;
4-22 = V (as per table)

TENSION	TEMPERATURE
X V	-10° C
X V	0
X V	+10° C
X V	+20° C
X V	+30° C
X V	+80° C

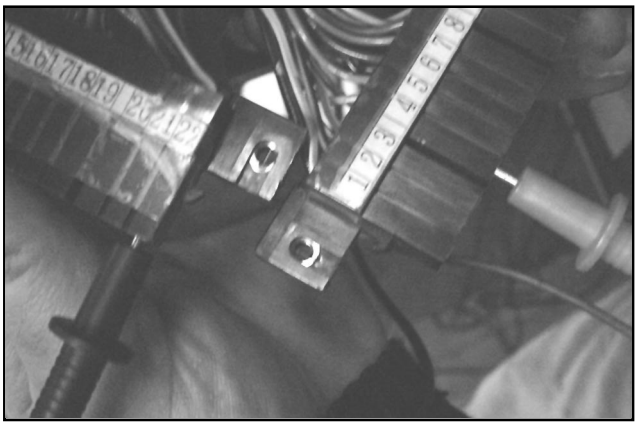

NO

Measured value = 5±0,2 V
Repeat continuity controls of the harness and sensor.

NO

Measured value = 0 V
Repeat controls of earthing isolation of the circuit and the sensor.

YES

YES

NO

9

YES → Check the connection to the control unit. Check the control unit feeds If necessary, replace la control unit.

NO → Reset or replace the harness.

YES → Start the engine and check that tension reduces progressively according to temperature increase as per the table.

YES → The temperature signal conforms.

NO → Replace the temperature sensor.

NOTE
For more in-depth control of the sensor, remove it from the engine and check the controlled temperature resistance.
Using a suitable container, immerse the metal part of the sensor in water, heat gradually and read the temperature and resistance values.
Check how they match with the table (see page 9-76).

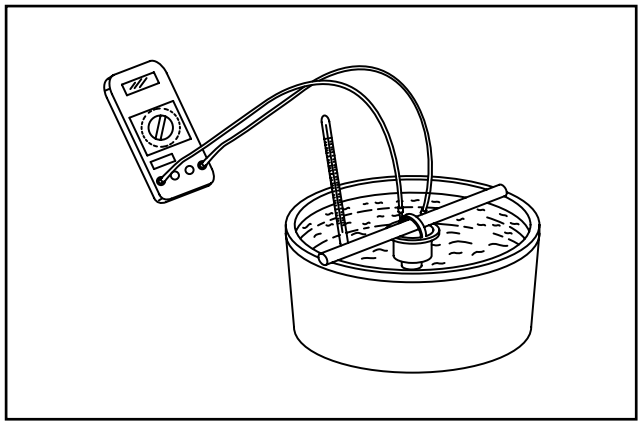

AIR INTAKE TEMPERATURE SENSOR

Terminals	Conditions	Standard
18-22	air intake temperature 20°	With sensor connected: 3750 ± 200 Ω

CIRCUIT DIAGRAM

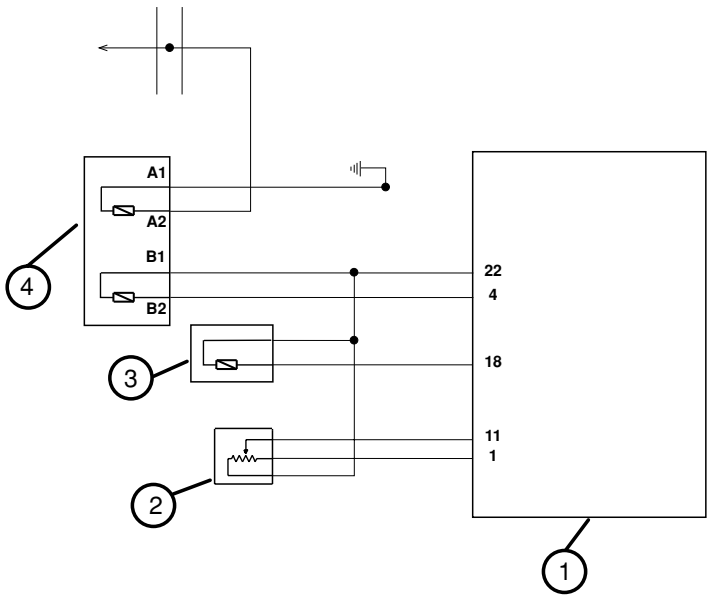

1	CONTROL UNIT	3	AIR TEMPERATURE SENSOR
2	THROTTLE POSITION SENSOR	4	COOLANT TEMPERATURE SENSOR

The air intake temperature sensor is inserted in the lower part of the throttle body from the filter box side.
The sensor is an NTC and has the same function layout as the coolant temperature sensor.
This signal is used to optimize the engine functioning. It is, however, a less influential signal than that of the coolant temperature.
In case of circuit damage, the control unit commands the lighting up of the fuel injection indicator and activates protection control, thus guaranteeing engine function.

To control the sensor and related circuit, proceed as follows.

Connect the diagnosis tester 020460Y.
See page 9-17.
Select the “ERRORS“ function from the menu.
Check if any anomalies concerning the air intake temperature sensor have been registered.

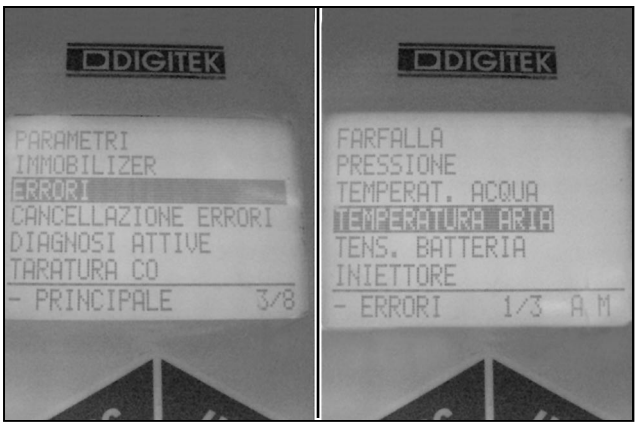

NO

The EMS system has not received temperature indications not included in the field of those possible.
If it is suspected that a temperature indication is incorrect, proceed with controls as indicated below.

YES

Before proceeding with control of the sensor and related circuit, it is advisable to wait until the engine has cooled completely so that the vehicle is adjusted to the working ambient temperature.

Set ignition to "ON" with switch on "RUN" and side stand raised.
On the diagnosis tester, select the “parameters” menu
Do not start the engine.

Check indications for:
coolant temperature
air intake temperature
ambient temperature indicated by the digital instrument.
The three indications are equal or differ by little (for example, 1°C)

YES

The air intake temperature sensor is probably giving a correct indication.

NO

Install the special tool 020481Y. See page 9-8.
Do not connect the control unit connector

Disconnect the air intake temperature sensor connector.
Measure the resistance between the sensor terminals.
Check that the resistance corresponds to the values stated on the basis of temperature.

RESISTANCE	TEMPERATURE
16.6 KΩ	-10° C
9.75 KΩ	0
5.97 KΩ	+10° C
3.74 KΩ	+20° C
2.41 KΩ	+30° C

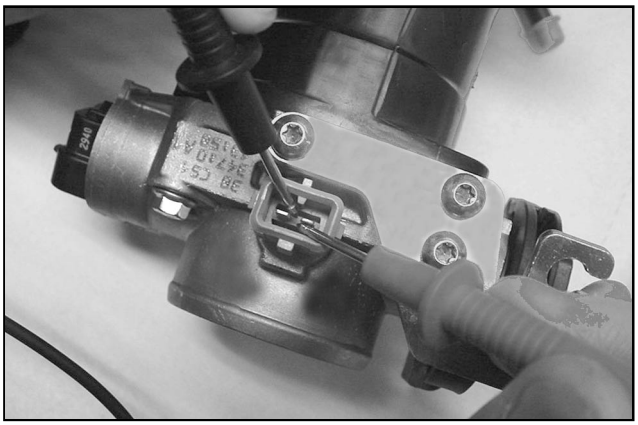

NO

Proceed with sensor replacement.

YES

Connect the sensor connector and repeat resistance control on terminals 18 and 22.

18-22 = Resistance equal to the value given directly to the sensor.

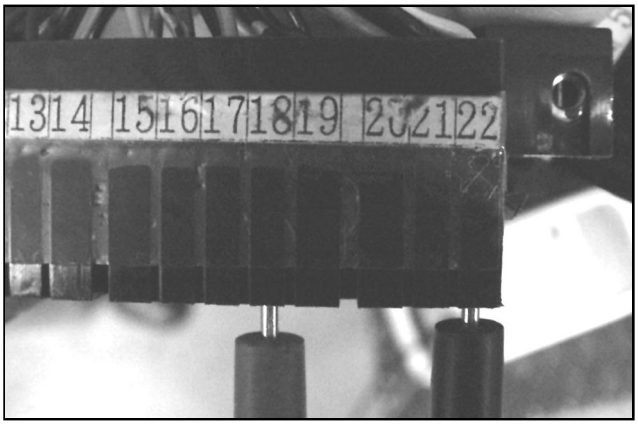

NO

On revealing slightly higher resistance values, check the connectors.
On revealing infinite resistance (>1MΩ) check continuity of the two wires with connectors disconnected.
Grey-white-18 = 0 Ω (continuity)
Light blue-green-22 = 0 Ω (continuity)

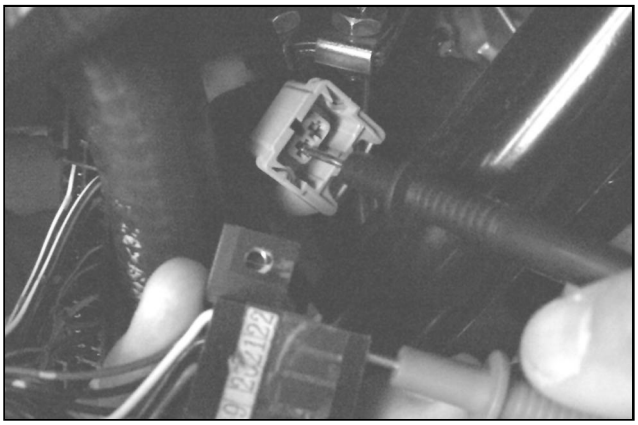

Repair or replace the harness.

YES

YES

Check that the sensor circuit is isolated from the earth.
18-23 = Ω infinity (>1MΩ)
22-23 = Ω infinity (>1MΩ)

NO

Reset or replace the harness.
Check the coolant temp. lines and throttle position.

YES

Connect the special tool 020481Y to the control unit.
Set ignition to "ON" with switch on "RUN" and side stand raised.

Measure the tension at terminals 18 and 22.
18-22 = V as per table.

TENSION	TEMPERATURE
XXX V	-10° C
XXX V	0
XXX V	+10° C
XXX V	+20° C
XXX V	+30° C

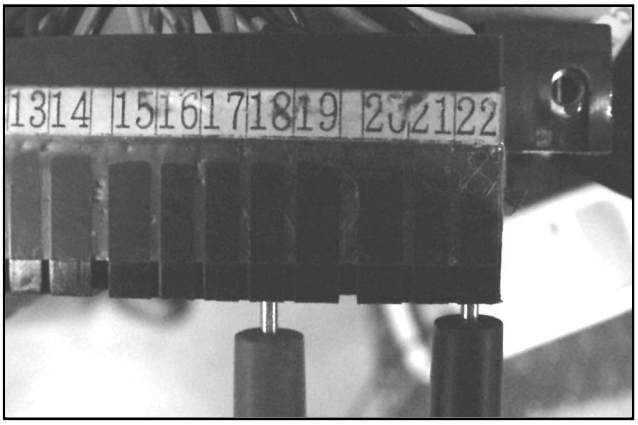

NO

Measured value = 5±0.2V
Repeat continuity controls of the sensor and harness.

NO

Measured value = 0 V
Repeat control of earthing isolation of the sensor circuit.

YES

Check the connection to the control unit.
Check the control unit feeds If necessary replace the control unit.

NO

Reset or replace the harness.

YES

Start the engine and check that the tension reduces progressively according to temperature increase in the air filter box.

NOTE

In a temperate climate it is quite easy to reach 30°C after a few minutes of parking with the engine idling.

9

PRESSURE SENSOR

This sensor does not have an installation, in that it is inserted directly into the control unit.
The sensor allows the control unit to optimize engine performance based on altimeter variations.

To control the sensor proceed as follows.

Connect the diagnosis tester 020460Y.
See page 9-17
Select the “errors“ function from the menu.
Check if anomalies concerning the pressure sensor have been registered.

YES → Proceed with replacement of the fuel injection control unit.

NO →

Select the “parameters“ function from the menu.
Check that the mm/Hg pressure indication corresponds to that of another vehicle or to an external barometer.

Max error: ±20 mmHg

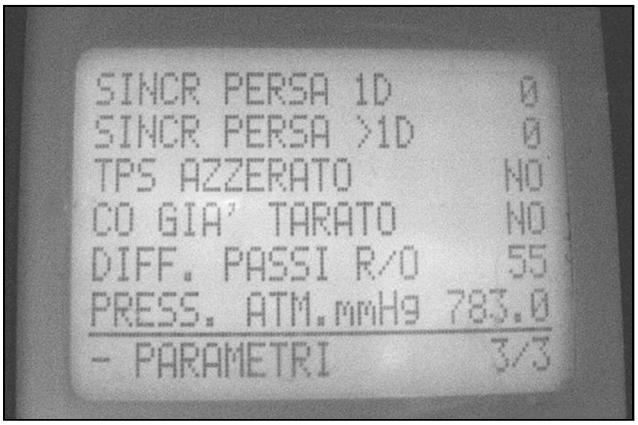

YES → The ambient pressure signal is correct.

NO → Replace the fuel injection control unit.

T.P.S.=THROTTLE POSITION SENSOR

Terminals	Conditions	Standard
1-22	Ignition set to "ON"	5V
11-22	Opening the throttle gradually progressive	Volt= progressive increase

CIRCUIT DIAGRAM

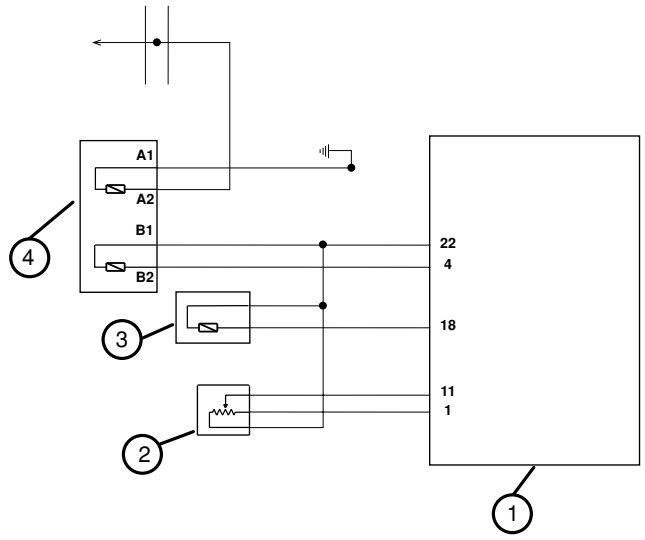

1	CONTROL UNIT	3	AIR TEMPERATURE SENSOR
2	THROTTLE POSITION SENSOR	4	COOLANT TEMPERATURE SENSOR

The TPS is set on the throttle body and is of the fixed type.
This sensor receives a 5V feed from the control unit and sends it a gradually increasing tension as the throttle opening increases. The control unit converts this tension into an angular position of the throttle.
The number of engine revolutions and the TPS are the two basic signals for management of the engine.
Damage to this circuit causes the fuel injection indicator to light up and activation of protection. Under these conditions the engine can function even if not on optimum, always safeguarding the integrity of catalyctic converter.
The TPS is particularly important in correspondence with the small openings in the throttle. These are also the areas where the sensor works most often and therefore to be controlled more often.

To control the sensor and related circuit proceed as follows.

9

Connect the diagnosis tester 020460Y.
See page 9-17
Ignition set to "ON" with switch on "RUN" and side stand raised.
Select the "ERRORS" function from the tester menu
Check if the control unit has revealed anomalies Concerning the TPS.

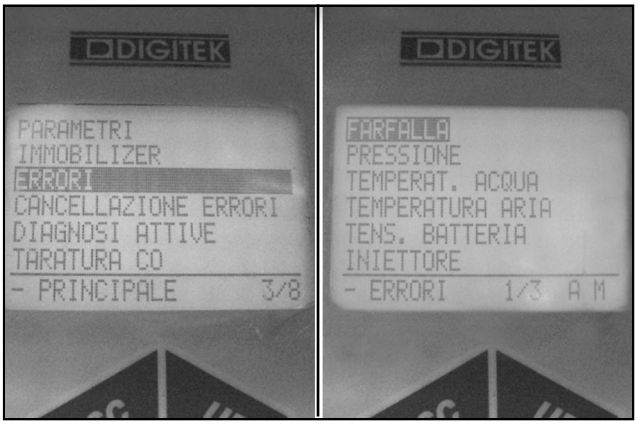

NO

YES

NO

Select the "parameters" function from the diagnosis tester menu.
Check if the control unit recognizes the extreme positions:
throttle valve to minimum
throttle valve to maximum

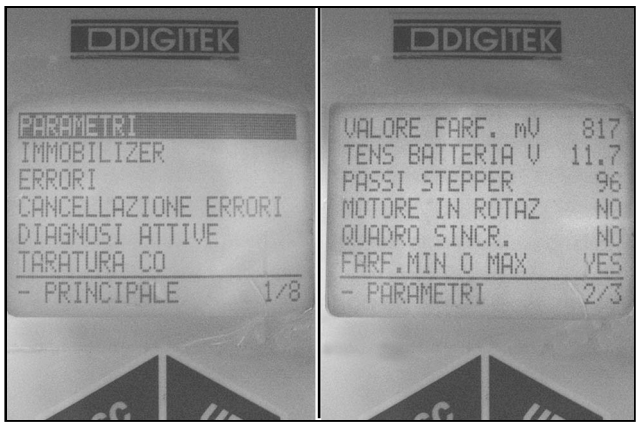

NO

Check regulation of the throttle command flexible transmissions.

NO

Reset or replace.

YES

Gradually open the throttle valve,
check that mV indication
Increases gradually in proportion to opening variations.

YES

The TPS conforms.

NO YES YES

Connect the special tool 020481Y to the fuel injection system. See page 9-8.
Do not connect the tool to the control unit.

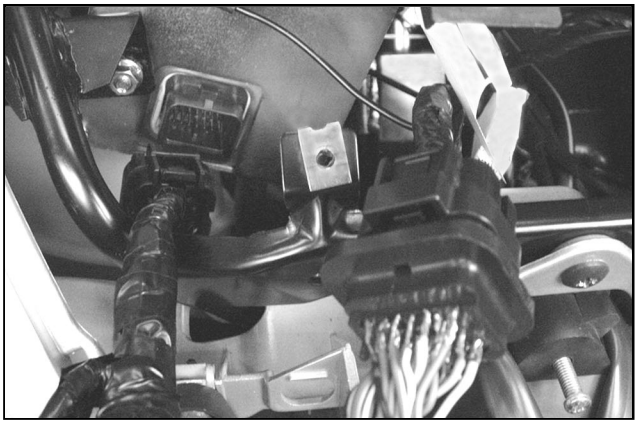

Disconnect the TPS connector.
Check the continuity between the connector terminals and related pins on the control unit side.
Light blue-green-22 = 0 Ω (continuity)
Brown-yellow-1 = 0 Ω (continuity)
Orange-light blue-11 = 0 Ω (continuity)

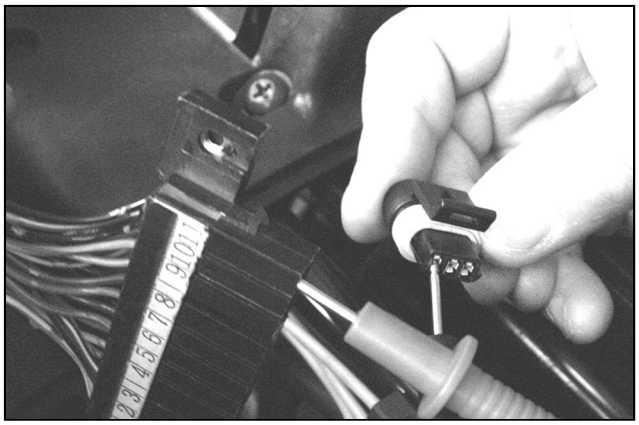

NO

Reset or replace the fuel injection harness.

YES

Check the earthing isolation of the three circuit wires.
22-23 = Ω infinity (>1MΩ)
1-23 = Ω infinity (>1MΩ)
11-23 = Ω infinity (>1MΩ)

NO

Reset or replace the fuel injection harness.

YES

Connect the special tool 020481Y to the control unit.
Set ignition to "ON" with switch in position "RUN" and side stand raised.

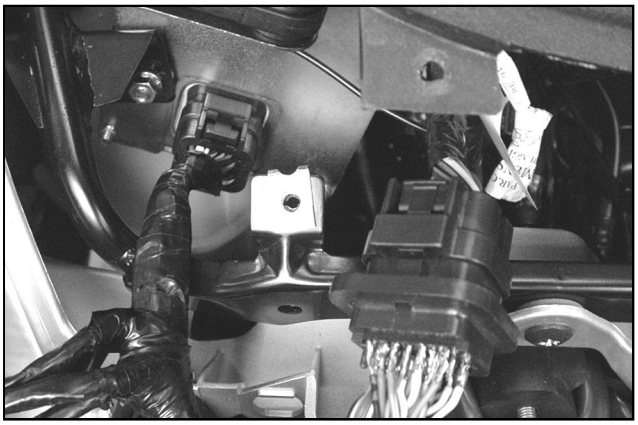

9

Measure the tension between terminals 1 and 22 of the special tool.
1-22 = 5±0.2 V

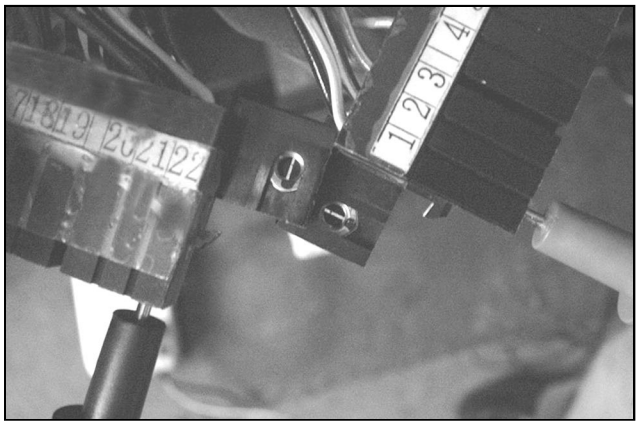

NO

Check the control unit connection.
If necessary proceed with replacement of the control unit.

YES

Connect the TPS connector.
Repeat tension measurement between terminals
1 and 22 of the special tool.
1-22 = 5±0.2 V

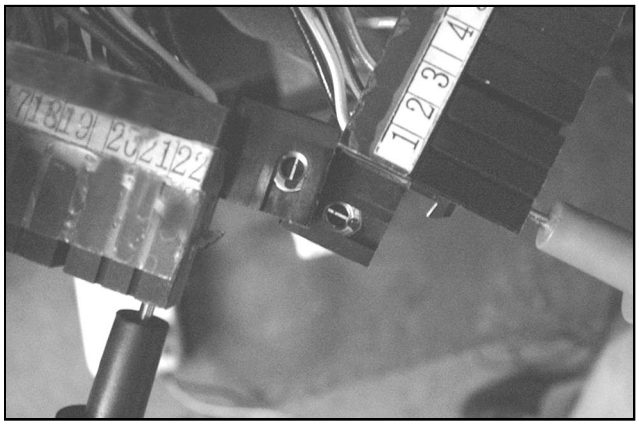

NO

YES

Measure the tension between terminals 11 and 22. Gradually open the throttle valve and check that tension value increases gradually.
11-22 = V (gradual variation)

NOTE

As an indication, the tension limits can vary from a minimum ~700mV to more than 4V maximum.
The possible variations in value limits are generated by the mounting tolerances of the sensor.

NO

Replace the throttle body complete with sensors and stepper.
(see Chapter. 7-THERMAL UNIT AND TIMING SYSTEM)

YES

YES

Check that the tension measured on pins 11 and 22 corresponds with the tension indicated by the diagnosis tester set to "parameters".

YES

The TPS and related circuit conform.

NO

Replace the control unit.

NOTE
The TPS control has been set with voltometer checks in that resistance controls are rather unreliable.
To check the potentiometer of a throttle body it is always advisable to connect it to a vehicle, even if only from an electrical point of view.

TPS RESET

The throttle body is supplied complete with TPS and is precalibrated.
The precalibration consists in an operation of regulating the minimum throttle opening, to achieve a set air flow under pre-established reference conditions.
Precalibration introduces an optimum air flow for idling management.
<u>This setting must under no circumstances be tampered with.</u>
The fuel injection system will complete the idling management via the stepper and the spark advance variation.
The throttle body, after precalibration, has the valve open at an angle that can vary according to the working tolerance of the duct and the valve itself.
The TPS, in turn, may assume different mounting positions. For these reasons the mV of the sensor with throttle to the minimum can vary from one throttle body to another.
To achieve optimum carburation, especially to the small openings of the throttle, the matching of the throttle body to the control unit is indispensable, via the procedure defined as TPS reset.
Through this operation we inform the control unit, as a starting point, the mV value corresponding to the precalibration position. The control unit will recognize this position as an angle of 5.24°.

To reset, proceed as follows.

Connect the diagnosis tester 020460Y. (See page 9-17).
Set ignition to "ON" with switch on "RUN" and side stand raised.

Select the "TPS reset" function on the diagnosis tester

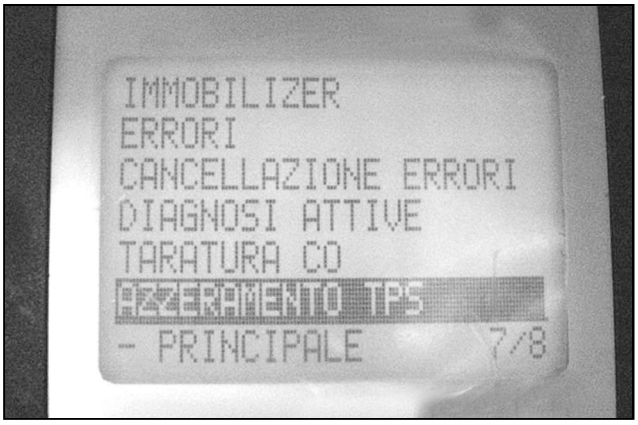

Check that the throttle command is supported by the setscrews.

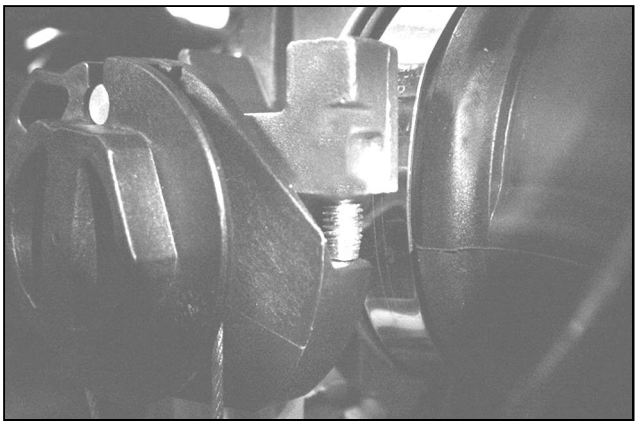

Ensuring that this position is maintained, confirm the TPS reset procedure.

Select the "parameters" function and check that the TPS reset “YES” indication is given.

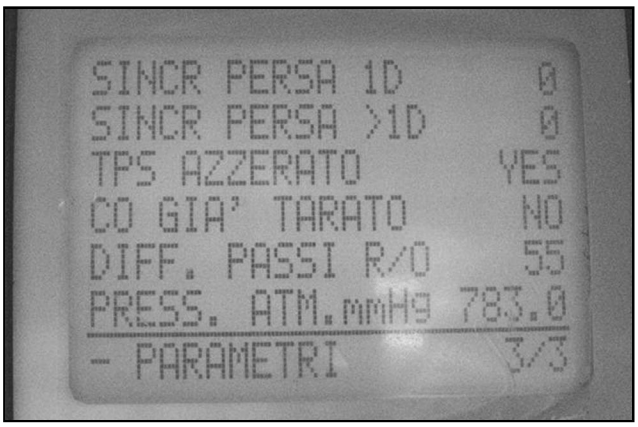

Reset must be carried out in the following cases:
- on initial assembly
- when the throttle body is replaced
- when the fuel injection control unit is replaced.

NOTE
The TPS reset procedure must not be carried out on a used throttle body, in that possible wear of the throttle and the minimum opening stop, render the air flow different from that of precalibration.

STEPPER MOTOR

CIRCUIT DIAGRAM

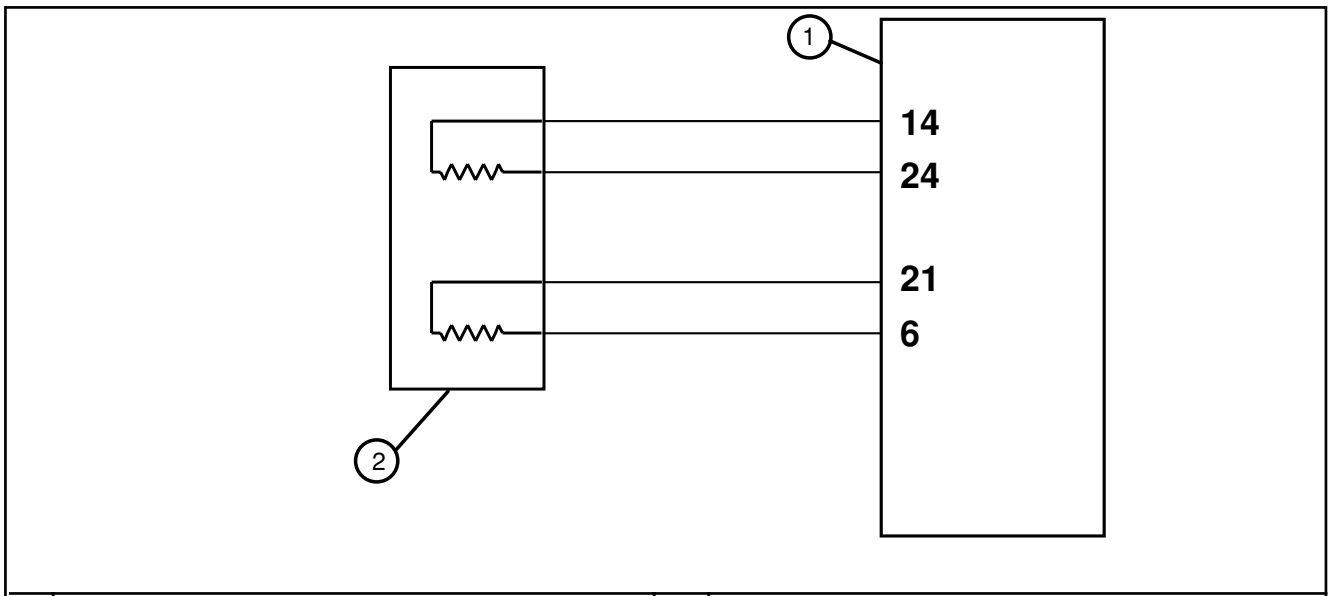

1	CONTROL UNIT	2	STEPPER

The throttle body is supplied with an auxiliary air circuit. This is activated more or less by a piston valve controlled by a stepper.
The stepper is fed by the control unit only when necessary to vary the opening.
Revolution is subdivided in rev fractions called “steps”.
By varying the opening “steps”, it is possible to adequately feed the engine to facilitate the ignition procedure and correct the cold engine air feed.
When the engine reaches normal running temperature, the stepper is partly closed.
To avoid anomalous wear on the adjusting piston, the speed functioning is achieved with a minimum opening of around 20 “steps”.
To recover any adjustments, when ignition is set to “OFF”, the piston closes completely and reopens by the number of steps pre-established (autoreset).
When the control unit modifies the opening “steps” of the stepper, it also modifies the fuel injection timing to guarantee that correct carburation is maintained.
Idling speed is practically stable 1450-50 rpm. After a warm starting phase the first revolutions increase is perceivable with the subsequent closure of the stepper to stabilize the speed.
On revealing speed irregularities, before proceeding with electrical controls, check accurately the cleanliness of the throttle and the auxiliary air circuit.

To control the stepper and related circuit, proceed as follows.

Connect the diagnosis tester 020460Y. See page 9-17.
Set ignition to "ON" with switch in position "RUN" and side stand raised.
Lift the vehicle with the central stand.

Select the “errors “ function from the menu
Check if the control unit has registered anomalies concerning the stepper circuit.

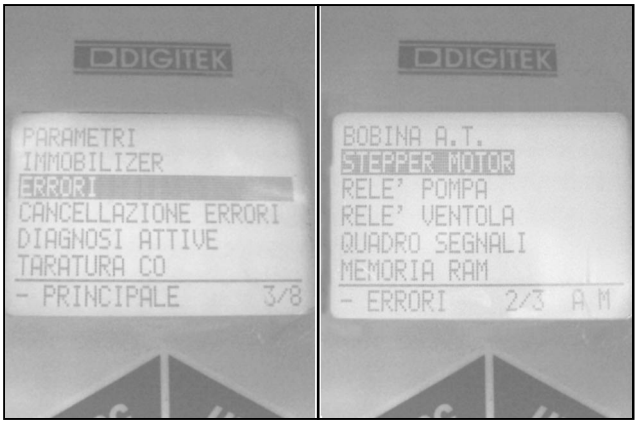

YES

NO

Select the “parameters“ function from the menu
Check the number of "steps" programmed by the control unit to achieve ignition.
This arrangement is a function of the engine temperature.
20° C = ~ 80-90 steps

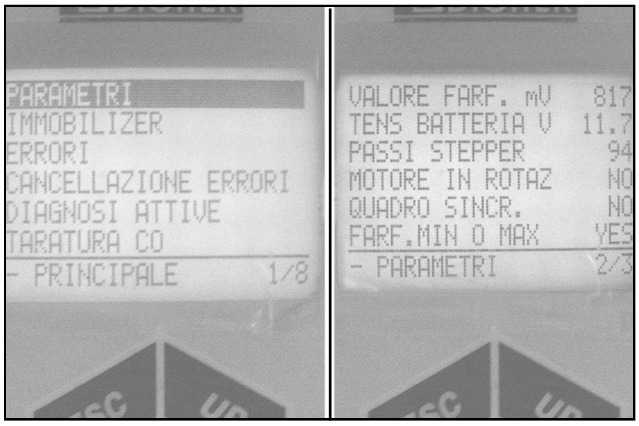

YES

Start the engine and allow it to warm up.
With a coolant temperature greater than 70°C, the control unit should command the stepper with around 20 "steps".

YES

NO

NO

NO

NO

Check the coolant temperature sensor signal.
See page 9-74.
If necessary check the control unit.

YES

Select the “active diagnosis“ function from the menu
Select "stepper" diagnosis

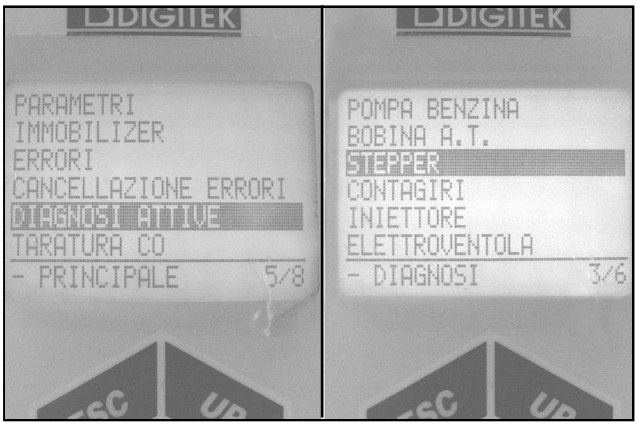

Activate the diagnosis with the engine warm and idling.
Check if the stepper commands any revolutions variation and await the response of the diagnosis tester.

NO

YES

Test completed successfully
Revolutions variations perceived.

Stepper and related circuit are efficient.

Test failed
No revolutions variation

Test completed successfully
No revolutions variation.
Remove the throttle body (see Chapter. 7-THERMAL UNIT AND TIMING SYSTEM).
Check cleanliness of the auxiliary air circuit.
Set ignition from "ON" to "OFF" and again to "ON" and check if the piston valve moves.

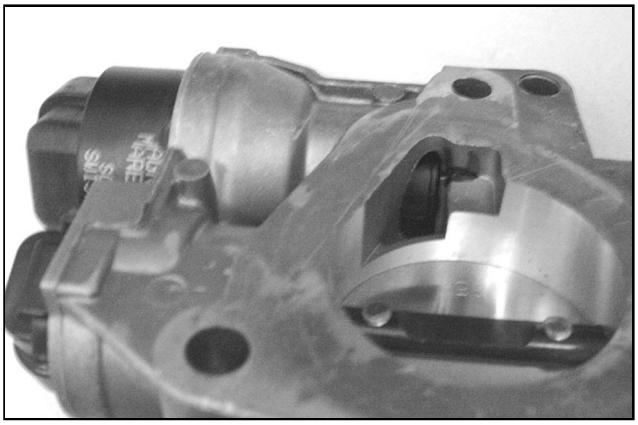

NO

If the valve does not move, replace the throttle body.
See Chapter. 7-THERMAL UNIT AND TIMING SYSTEM.

9

YES

Proceed with control of the stepper circuit.

Disconnect the stepper connection.
Check the resistance of the stepper circuits connecting the tester as shown in the diagram.
The two measurements must have the same value.
Resistance = ~ 51 Ω

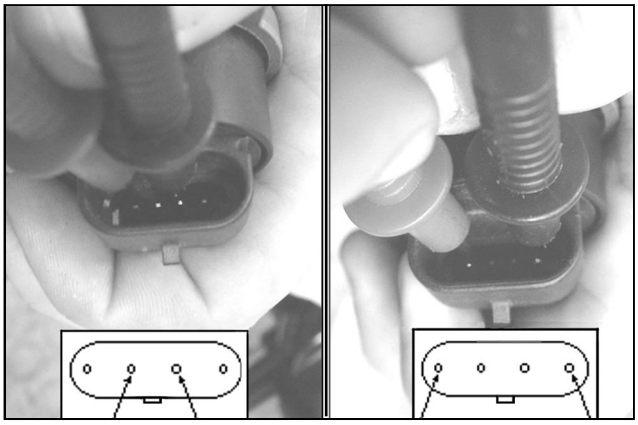

NO

Proceed with replacement of the throttle body.
See Chapter. 7-THERMAL UNIT AND TIMING SYSTEM.

YES

Connect the special tool 020481Y. See page 9-8
For these controls do not connect the special tool to the control unit.

Check continuity of the 4 feed wires of the stepper.
A Light blue-red-14 = 0 Ω (continuity)
B Orange-blue-6 = 0 Ω (continuity)
C Light blue-yellow-21 = 0 Ω (continuity)
D Light blue-black-24 = 0 Ω (continuity)

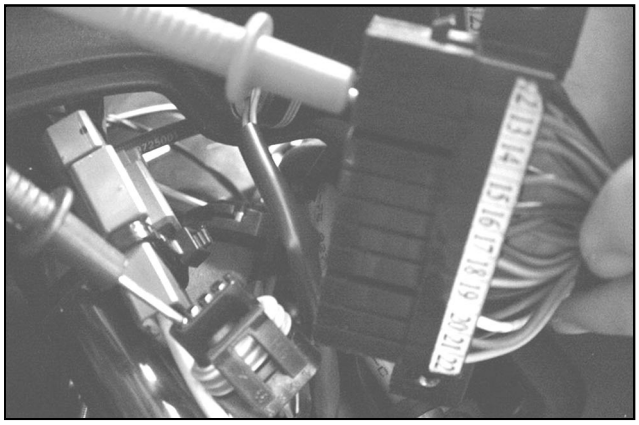

YES

Check the earthing isolation of the 4 wires of the stepper.
14-23 = >1MΩ (infinity)
6-23 = >1MΩ (infinity)
21-23 = >1MΩ (infinity)
24-23 = >1MΩ (infinity)

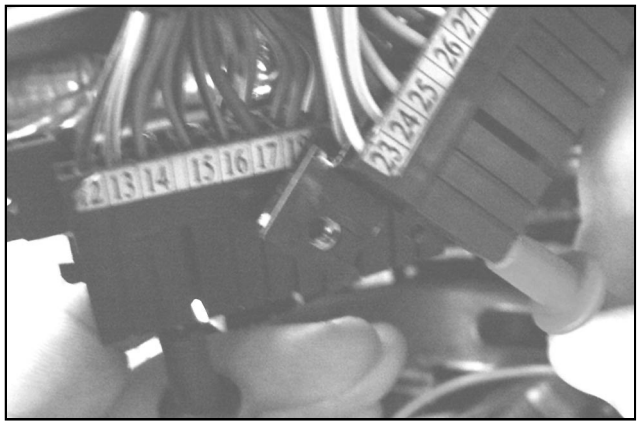

NO

YES

NO

NO

NO

Repair or replace the harness.

YES

Connect the stepper connector.
Repeat continuity control of the tool pins.

14-24 = ~ 51 Ω
6-21 = ~ 51 Ω

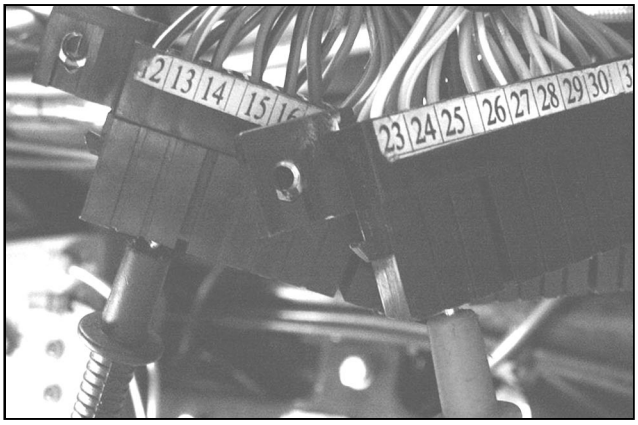

NO

Check the harness and connectors more accurately.

YES

Connect the control unit connector.
Set ignition to position "ON" with switch on "RUN" and side stand raised.

Repeating the communications "ON" "OFF" "ON", check the presence of tension pulses on the command wires of the stepper.
Arrange continuous tension measurements.

14-24 = V (pulses for a few seconds)
6-21 = V (pulses for a few seconds)

NOTE

The pulses serve to modify the stepper position.
On reaching optimum position feed tension becomes zero.

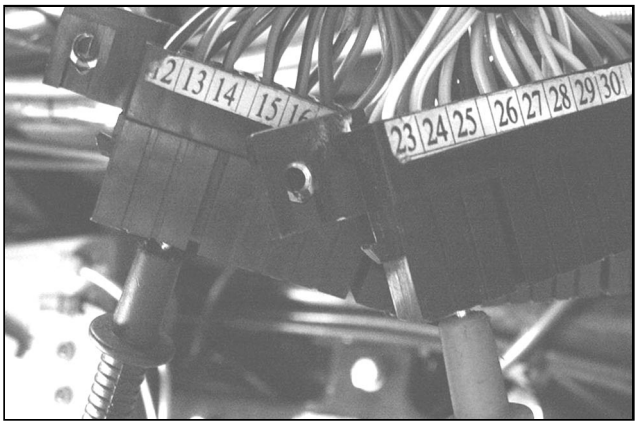

YES

NO

9

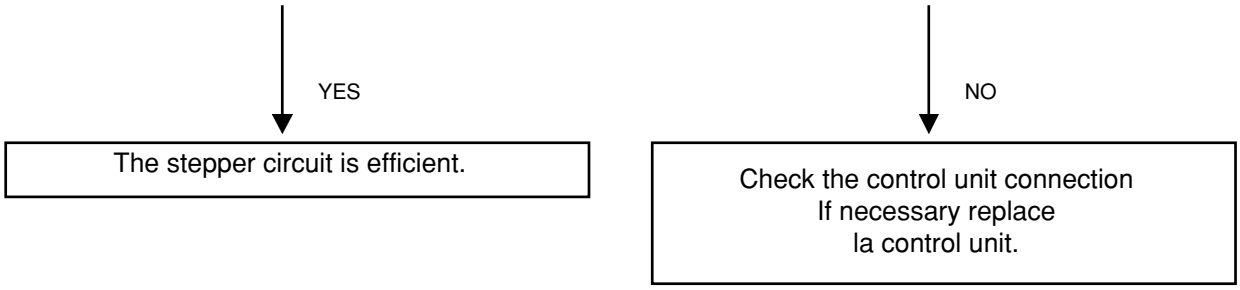
YES
NO
The stepper circuit is efficient.
Check the control unit connection
If necessary replace
la control unit.

MINIMUM CARBURATION REGULATION

The fuel injection system control unit is programmed to guarantee optimum carburation during use on the road. Minimum carburation necessitates a refinement destined to compensate for the productive tollerances and adjustments of the engine.
This regulation is carried out by modifying the opening time of the injector when the engine is idling.

To carry out the regulation, proceed as follows:

Minimum carburation regulation must be carried out on an engine in good working condition.
Preventive checks:
- spark plug
- air filter
- good air intake system seal
- good exhaust system seal
- valves play
- fuel filter
- fuel pressure

↓

Preheat and check reset of the exhaust gas analyzer 494929.
Remove the plug of the exhaust manifold and connect the extension with the intake for the analyser tube.

↓

Connect the diagnosis tester 020460Y see page 9-17.
Set ignition to "ON" with switch in position "RUN" and side stand raised.

↓

Select the “ERRORS “ function from the menu
Check the presence of any anomalies.

NO ↓

Select the “PARAMETERS “ function from the menu

YES ↓

Repair according to the indications given.

9

Start the engine and allow it to warm up until the following conditions are reached:
- coolant temperature = more than 70°C
- air intake temperature = 25 - 30°C

Activate the exhaust gas analyser and check the following conditions:
- CO = 1.25±0.25%
- CO2 = 14.50±1%

YES

Regulation is correct.

NO

On revealing non-conformant CO values adjust fuel injection timing to minimum.

Select the “CO PRECALIBRATION” function from the diagnosis tester menu
Activate the adjusting function.

The display shows the words "TRIMMER VALUE".
The numeric indication may be positive or negative.

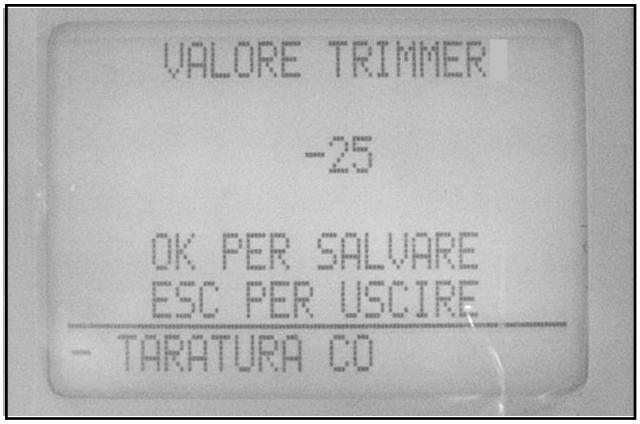

To increase CO it is necessary to increase fuel injection timing.
To decrease CO it is necessary to decrease fuel injection timing.
Regulate the trimmer value according to indications given in the table:

TRIMMER VALUE	FUEL INJECTION TIMING	C O
+100	HIGH	INCREASES
+ 50	⇑	⇑
+ 10		
0	MEDIUM	
- 10		
- 50	⇓	⇓
-100	LOW	DECREASES

NOTE: A trimmer value of 0 corresponds to medium fuel injection.
After regulation, engines may find carburation with either positive or negative trimmer values. This is due to normal production tolerance.

After varying the trimmer value,
wait for the CO to adjust itself.
When regulation is shown to be correct, press OK
to memorize the value in the control unit.

Select the menu to "PARAMETERS" and "ECU INFORMATION" to receive confirmation that the new trimmer variation has been memorized.

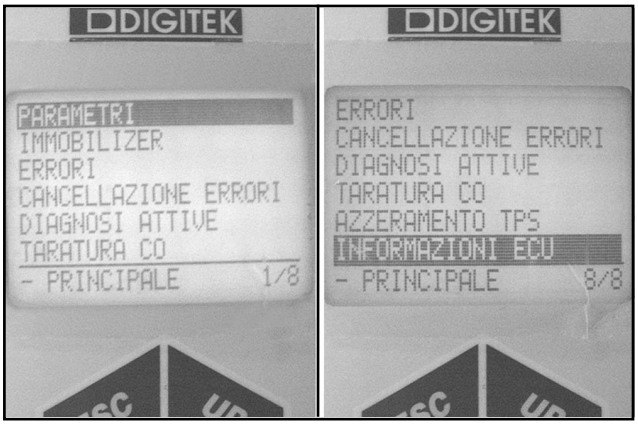

NOTE: When the CO percentage is correct and the CO_2 value does not fall within the preset values, LAMBDA value will also be false.
In this case check accurately the exhaust system seal.

When the CO percentage is correct and the HC (PPM) value is greater than the maximum allowed limit, check:
- spark plug
- valves play
- timing phase
- exhaust valve seal

If it proves necessary to replace the control unit it is important to carry out TPS reset and preventively preset the trimmer value of the original control unit (if available).
In all cases check the CO value again.

ELECTRICAL FAN CONTROL CIRCUIT

Terminals	Conditions	Standard
5-23	Set ignition to position "ON" Switch on "RUN" Side stand raised Electrical fan stopped	Battery tension

CIRCUIT DIAGRAM

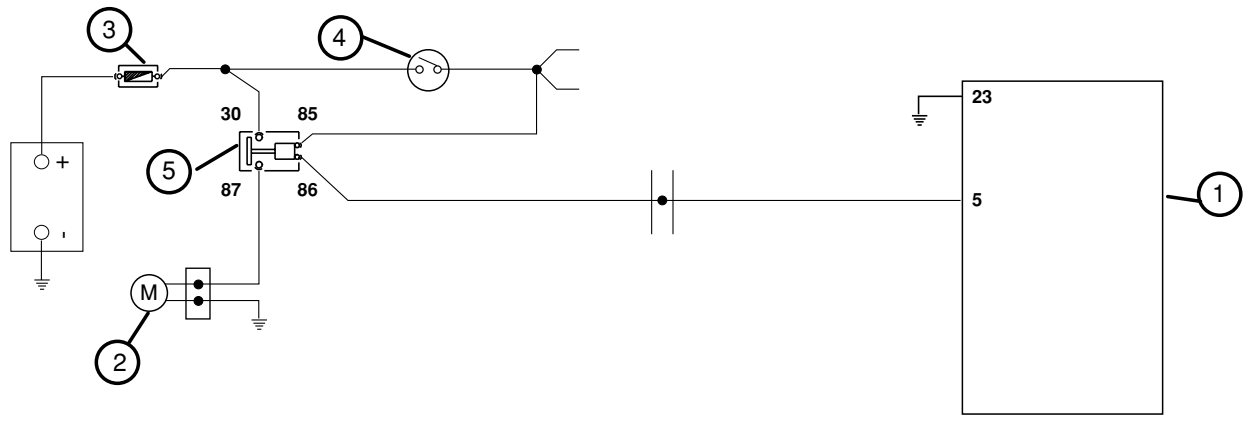

1	CONTROL UNIT	4	KEY IGNITION
2	ELECTRICAL FAN	5	ELECTRICAL FAN ELECTROMAGNETIC SWITCH
3	30A FUSE		

The electrical ventilation system is fed by an electromagnetic switch connected under the panel and controlled by the fuel injection control unit.

The fuel injection control unit manages control of the electrical fan on the basis of temperatures revealed by the engine.
If a prolonged rotation of the electrical fan should occur, before proceeding with electrical system controls, check accurately:
- level of the expansion tank
- drain from the tube leading to the engine
- drain on outlet from the cylinder head
- thermostat efficiency
- pump efficiency.

For these controls, see chapter 11-COOLING.

To control the circuit, proceed as follows:

Connect the diagnosis tester 020460Y
see page 9-17.
Set ignition to "ON" with switch in position "RUN" and side stand raised.
Select the “ERRORS “ function from the menu
Check if the control unit has registered anomalies concerning the electrical ventilation control circuit.

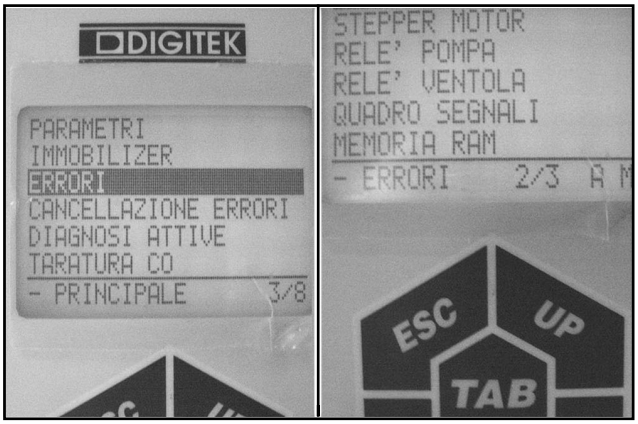

NO

YES

Select the “ACTIVE DIAGNOSIS“ function from the menu
Activate the electrical fan diagnosis function
Check acoustically the electrical fan rotation.
Await the results from the diagnosis tester.

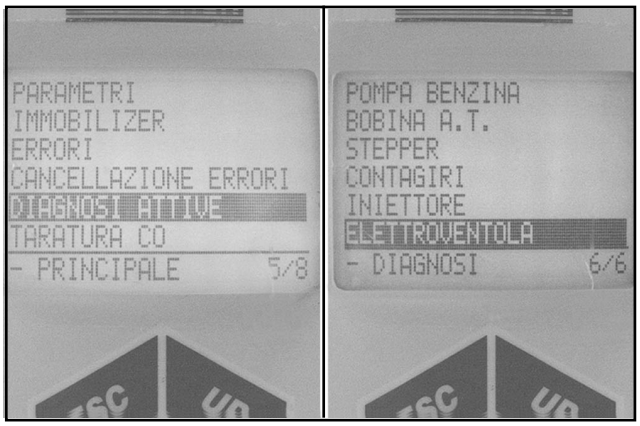

YES

NO

NO

Test completed successfully.
The fan rotates.

Test failed.
The fan does not rotate.

The electrical ventilation system conforms.

Test completed successfully.
The fan has not worked.

The electromagnetic switch control circuit is efficient.
Check the electrical fan connection, electromagnetic switch contact efficiency, positive wires, negative wire and the electrical fan motor.

Disconnect the electrical fan control electromagnetic switch
Check continuity of the excitation coil.
85 - 86 = 150±50 Ω

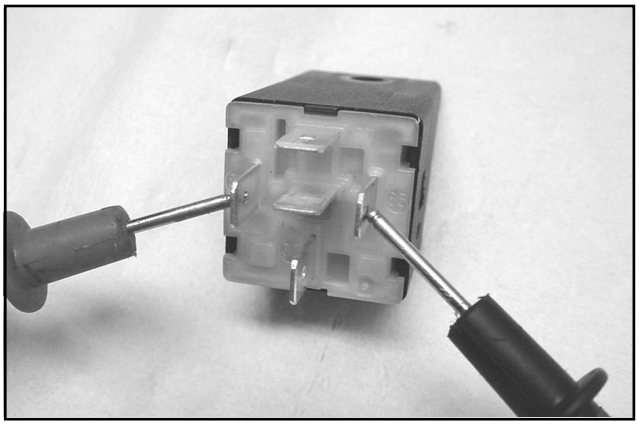

YES

NO

Replace the electromagnetic switch.

Connect the special tool, 020481Y between the control unit and the fuel injection system (see page 9-8)
Do not connect to the control unit.

Check the presence of battery positive tension at 85 of the electromagnetic switch connector.
85 (white) - 23 = battery tension with ignition set to "ON".

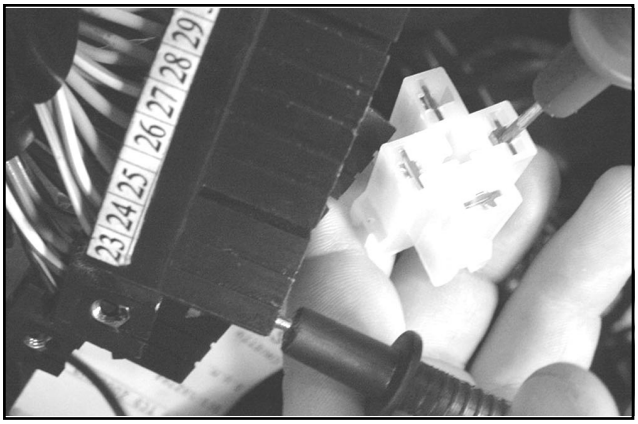

YES

NO

Reset or replace the harness.

9

Keeping the electromagnetic switch disconnected, check continuity between 86 of the electromagnetic switch connector and 5 of the control unit.
86 (Green-White) - 5 = 0 Ω (continuity)

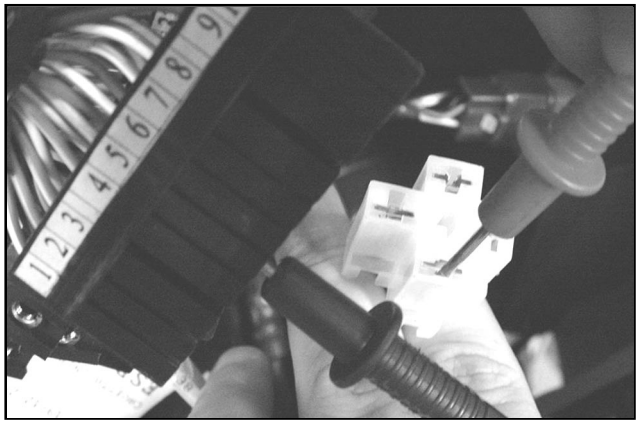

YES

NO

Disconnect the connector between the vehicle system and fuel injection system.
Check the connector and repeat continuity controls.
86 - Green-White = 0 Ω (continuity)
Green-White - 5 = 0 Ω (continuity)

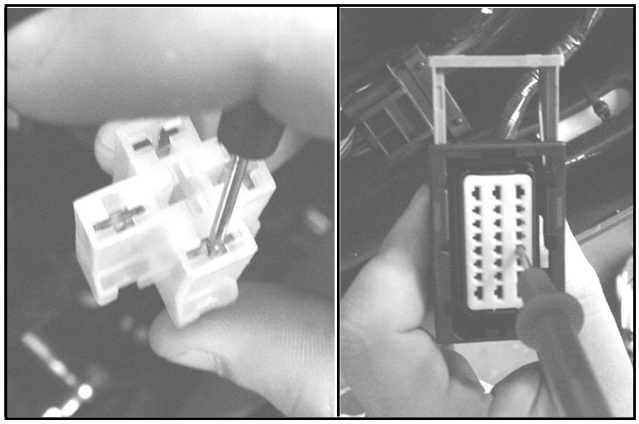

Check the earthing isolation.
5 - 23 > 1MΩ (infinity).

YES

NO

Repair or replace the harness.

Connect the electromagnetic switch and check the presence of tension between terminals 5 and 23 with the key switch set to "ON".
5 - 23 = battery tension with panel set to "ON".

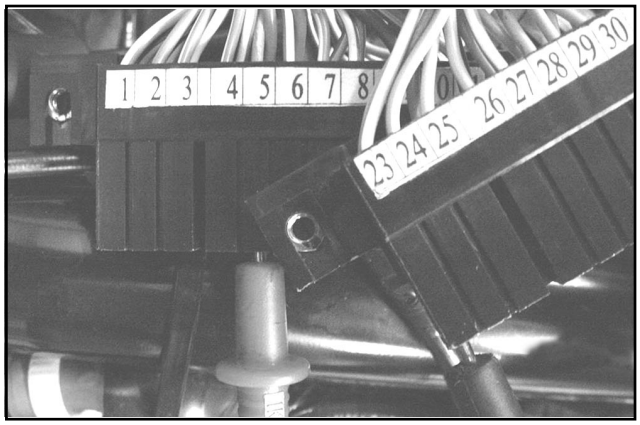

Repeat the control with the control unit connected and the engine cold.
5 - 23 = battery tension with panel set to "ON".

If the anomaly persists replace the control unit.

REVOLUTIONS COUNTER CONTROL CIRCUIT

Terminals	Conditions	Standard
3 - 23	Ignition set to "ON" Switch set to "RUN" Side stand raised Engine stopped	9 - 10 Volt

CIRCUIT DIAGRAM

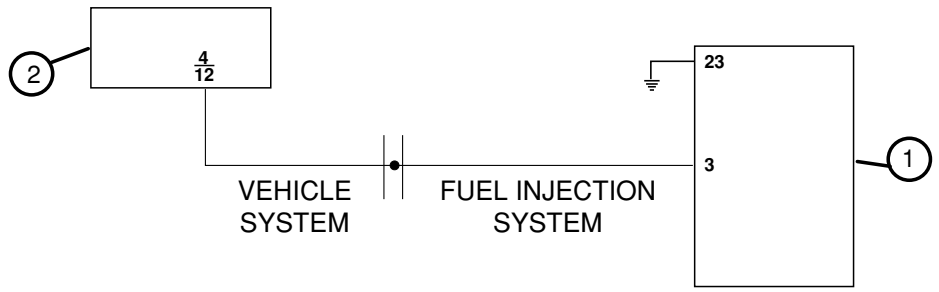

1	CONTROL UNIT	2	DIGITAL INSTRUMENT

The analog revolutions counter receives commands from the digital instrument panel which in turn receives signals from the fuel injection control unit.

To control the revolutions counter and related circuit, proceed as follows:

While pressing down both the clock and “S” buttons, set ignition to “ON”.
The digital instrument commands general check of the warning lights and instrument.

Check if the revolutions counter has reached the bottom scale.

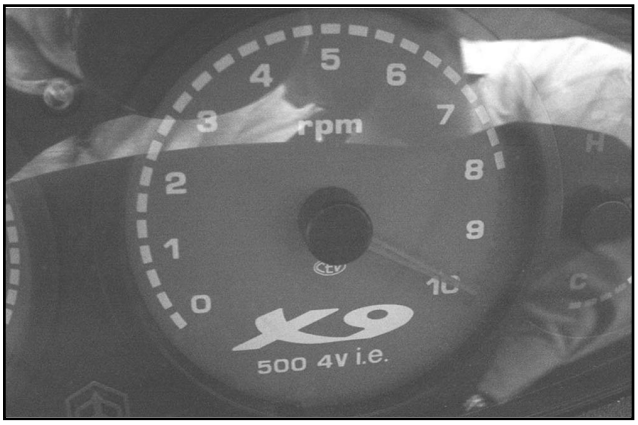

YES

NO

Check the analog instrument and the digital instrument panel.

Connect the diagnosis tester, 020460Y see page 9-17
Set ignition to "ON" with switch in position "RUN" and side stand raised.

Select Active diagnosis on the menu
Activate diagnosis of the revolutions counter.
Check that revolutions counter instrument rises from zero to 3500 revolutions before returning to zero.

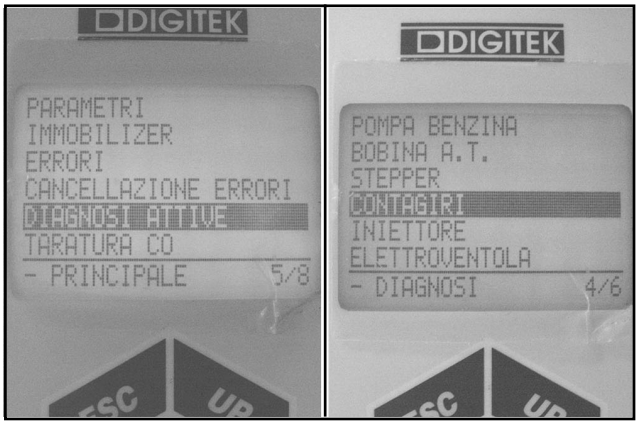

YES

The control circuit of the revolutions counter is working.

NO

Connect the special tool, 020481Y, to the fuel injection system. See page 9-8.

9

Disconnect the digital instrument.
Keep the control unit disconnected.
Check continuity of the wire from the control unit to the digital instrument.
Yellow (terminal 4/12) - 3 = 0 Ω (continuity)

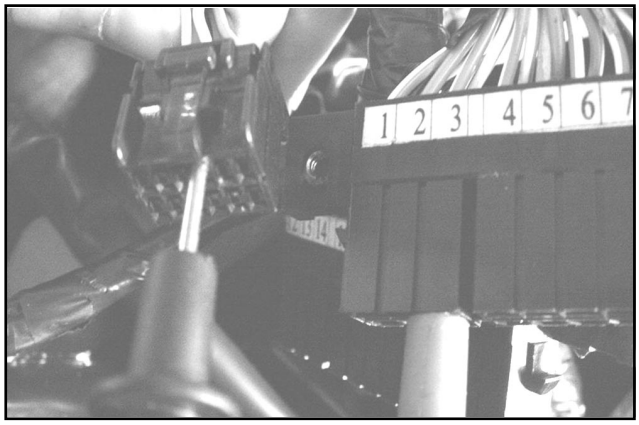

YES

NO

Disconnect the connection between the vehicle system and the fuel injection system.
Repeat continuity control of the two wires.
Terminal 4/12-yellow = 0 Ω (continuity)
Yellow-3 = 0 Ω (continuity)

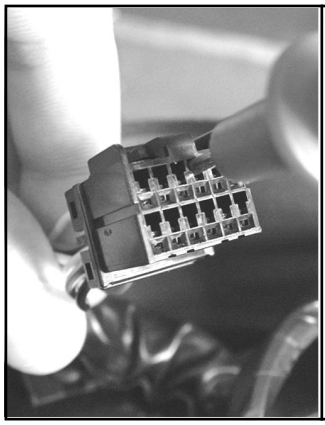

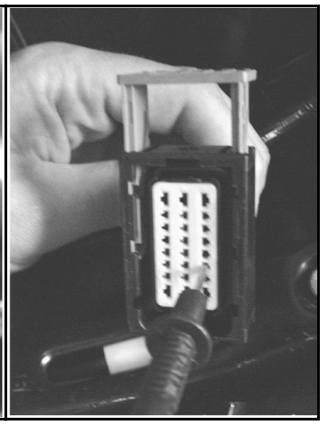

Reset or replace the harness.

Check the earthing isolation of wire
3 - 23 >1MΩ (isolation)

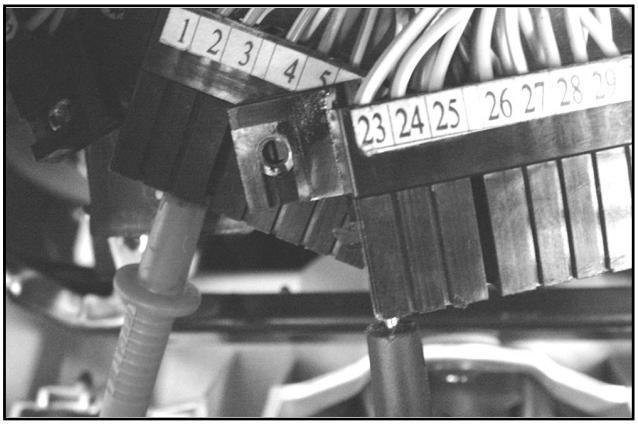

YES

Repair or replace the harness.

YES

Connect the control unit.
Ignition set to "ON"' with switch on "RUN" and side stand raised.

Measure the tension between pins 3 and 23 with engine stopped.
3 - 23 = 9 - 10 V

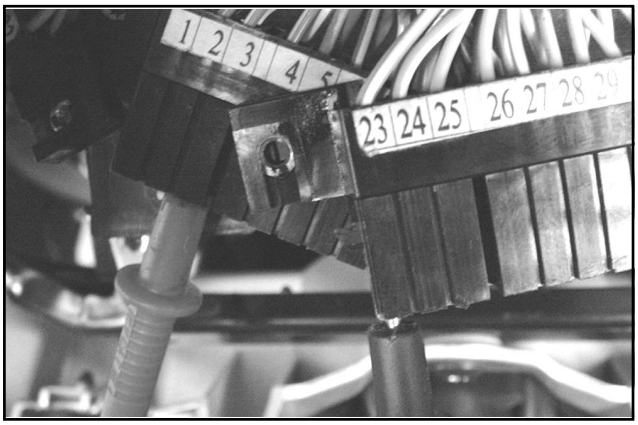

YES

NO

Using the diagnosis tester carry out a revolutions counter control.
Measure tension again.
3 - 23 = less than 1V for a few seconds.

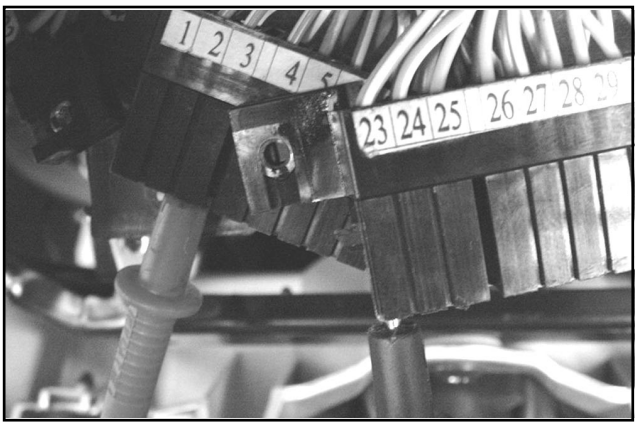

YES

NO

The control circuit of the revolutions counter is working.

Replace the fuel injection control unit.

9

TABLE OF CONTENTS

LUBRICATION 10

SPECIFICATIONS

Sump capacity	Overhaul	1.7 litres
	Oil and filter change	1.5 litres
Recommended engine oil	Selenia HI Scooter - 4Tech 5W/40	specification API SJ

Oil pump	Type	Trochoidal
	Rotor thicknesses	8 mm
	Assembly clearances	lobe ends 0.05 - 0.008 mm
	Radial play of the external rotor	0.05 - 0.12 mm
	End play of the rotors	0.025-0.065 mm
By-pass	Type	piston
	Piston diameter	Ø13.9 $^{-0.039}_{-0.057}$ mm
	Free length of spring	62.5 mm
	Calibration pressure	4 bar
Pre-filter	Type	plastic mesh
Oil filter	Type	paper with overpressure by-pass and antidraining
Minimum oil pressure signal switch	Calibration	0.3 - 0.6 bar
Head ubrication control jet	Diameter	Ø 1 $^{\pm 0.05}$ mm tightening torque 5-7 N·m
Piston cooling nozzle	Diameter	Ø 0.8 $^{\pm 0.05}$ mm
Crankcase ventilation control	Device	metal reed valve and decanting chamber

GENERAL CHARACTERISTICS OF THE LUBRICATION SYSTEM

The lubrication system is divided into two sections:
- **high pressure**
- **low pressure**

All the components forming part of the high pressure section are situated on the engine crankcase; whilst the low pressure section exclusively concerns the thermal unit.
The trochoidal pump is installed in the sump and is controlled by means of a pair of drive wheels.
To guarantee pump integrity a pre-filter is used.
The pre-filter is of a pull-out type and the related plug also acts as engine oil drain.
The pump delivery is controlled by a piston by-pass calibrated to 4 bar. This is positioned prior to the cartridge filter and both are installed on the flywheel cover, and as such its gasket is subject to system pressure.
The by-pass positioned prior to the cartridge filter improves the working conditions of the filter itself, especially with cool oil.
The filter is supplied with a antidraining valve and a overpressure valve; the latter intervenes when the filter mass causes a pressure drop greater than 1 ± 0.2 bar.
Of course, these conditions are met only by cool oil and a high engine running speed or by a dirty filter.
The filtered oil is used to lubricate the water pump spindle and, on reaching the engine crankcase, to lubricate the main bearings, the housing of the big end of the connecting rod and of the cooling piston nozzle, set in the housing on the transmission side.
The main bearing, transmission side, is provided with a oil seal and related exhaust tube.
Leading from the housing on the flywheel side is the timing feed tube; the delivery at the head is controlled by the special jet screwed into the engine crankcase.
The timing components work with low pressure lubrication.
The camshaft housings are set directly in the aluminium of the head; the camshaft end play is recovered in part from the oil sent to the smallest diameter housing.
The camshaft provides for lubrication of the equalizers by means of special holes; these are set in such a position as to guarantee lubrication after vehicle parking. This result is achieved by the position most probably assumed by the camshaft during the engine stop phase.
The oil used for lubrication of the head, returns to the sump via the chain housing channel and as such also provides lubrication to the chain itself.
To avoid fumes recovered from the crankcase transporting quantities of oil, a unidirectional valve and a decanting chamber are used. The unidirectional valve is of the metal reed valve type; the decanting chamber is supplied with a drainage hole. Any inefficiency in these may lead to the presence of oil in the air feed tube to the engine.
An excess of oil fumes may cause occlusions in the channels set in the throttle body.
For indicating minimum oil pressure of the system a pressure switch situated immediately after the filter outlet is used.
The lubrication circuit does not concern the countershaft, which is lubricated by the oil transported by the drive wheels or by that centrifuged from the engine driving shaft.
The same thing occurs for the piston and the gudgeon pin, although in this case the cooling nozzle is particularly relevant.

DIAGNOSTICS GUIDE

Lighting up of the minimum oil pressure indicator with a warm engine.

↓

Remove the electrical connector of the minimum pressure switch.
Check that the indicator lamp turns off.

YES ↓ Control the actual oil pressure.

NO ↓ Check and reset the electrical system.

↓

- Remove the switch and install the special tool and related gasket.

Specific tools:
Manometer 020193Y
Manometer union 020434Y

- Remove the dipstick with the oil loading plug and insert a plug prepared with a temperature probe as part of the specific tool.
  Insert the probe until it comes into contact with the bottom of the crankcase then pull it back a few millimetres.

Specific tool:
Multimeter with temperature probe 020331Y

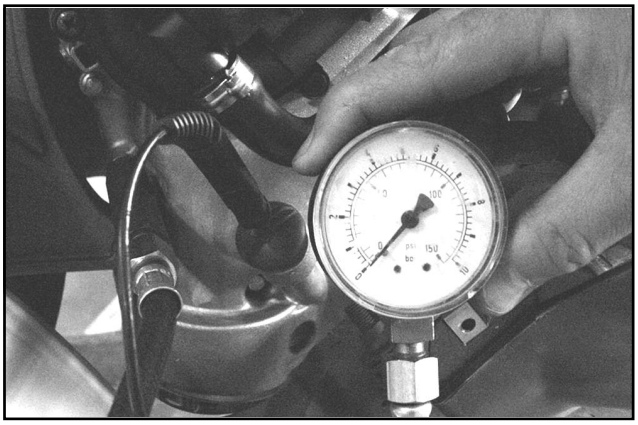

↓

Measure the pressure with a cold idling engine.
Standard values: 20°C Temperature 1400 rpm. ⇒ ~ 4.5 bar

NOTE: The revolutions may be revealed by either the exhaust gas analyser or diagnosis tester 020460Y.

NO ↓ Pressures of less than 4 bar revealed.

YES ↓ Allow the engine to warm up and repeat the control with warm oil.
Standard values: 80°C Temperature 1400 rpm. ⇒ ~ 1,5 bar

YES ↓ Replace the minimum oil pressure switch.

NO ↓ Pressures of less than 1.3 - 1.5 bar revealed.

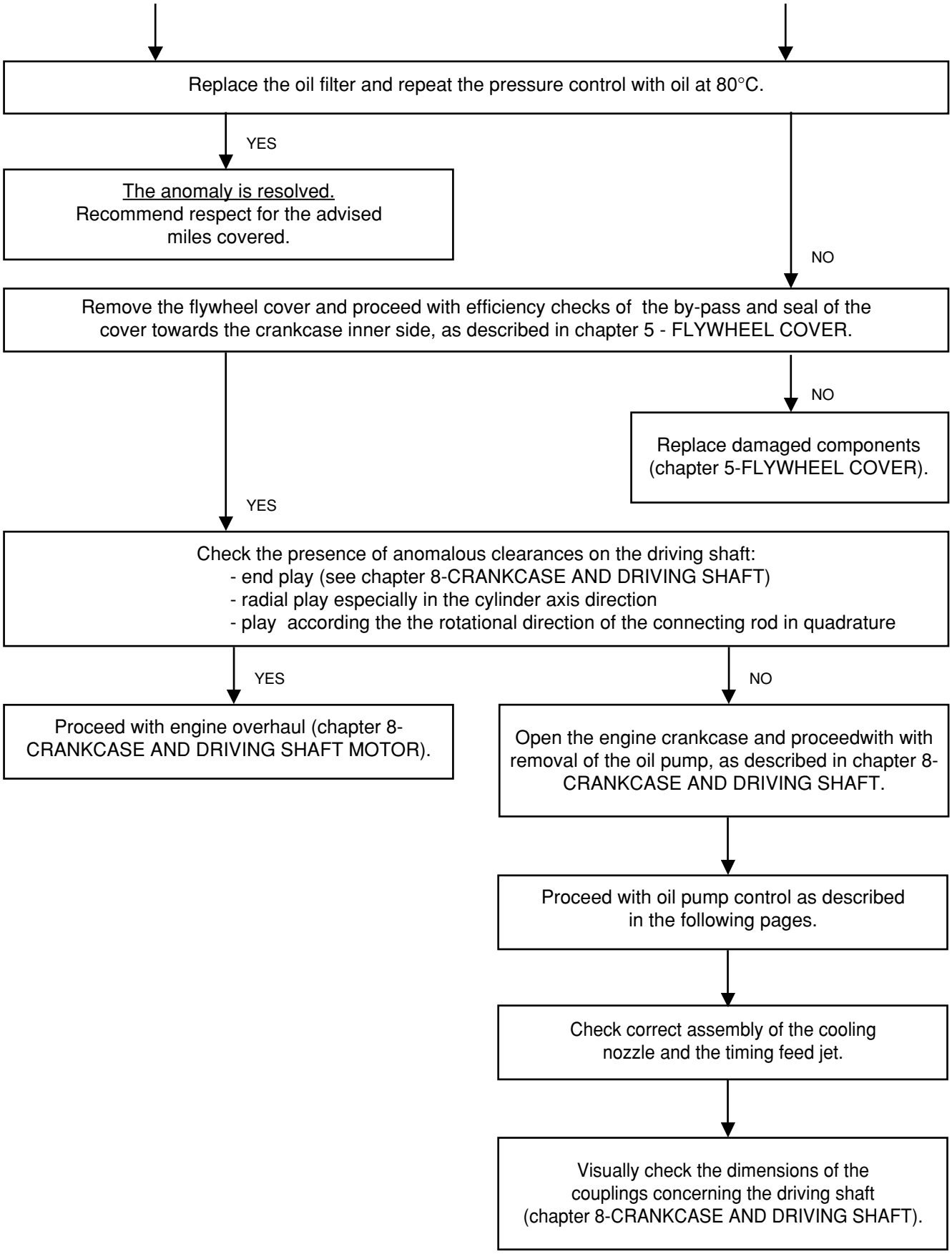

NOTE: Any anomalies discovered in the couplings and timing components are not revealable through lubrication pressure control. These may occur with a noise increase.

NOTE: Revealing pressure anomalies on the crankcase it is always advisable to proceed with visual and dimensional controls of the timing components (see chapter 7-THERMAL UNIT AND TIMING SYSTEM).

Checking the oil pump

- Remove the two screws and the oil pump cover.

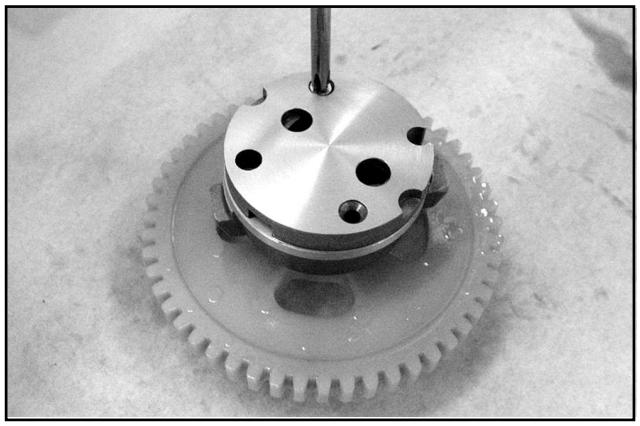

05_483

- Remove the internal rotor retaining ring turning it so that the opening is in correspondence with the shaft facing.

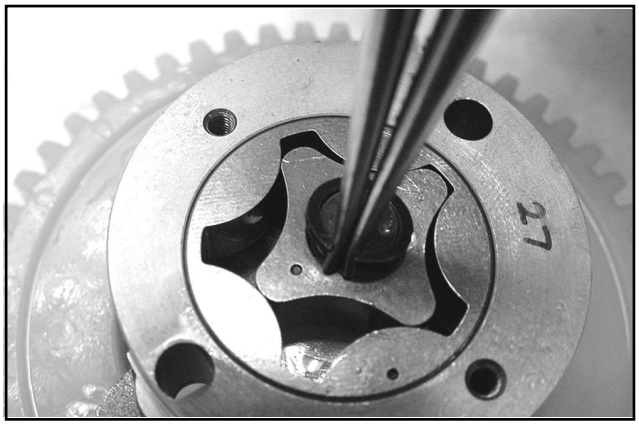

05_484

- Remove the rotors and clean them accurately with petrol and compressed air.
- Pull out the shaft complete with drive wheel to check its condition and any signs of wear the shaft itself.

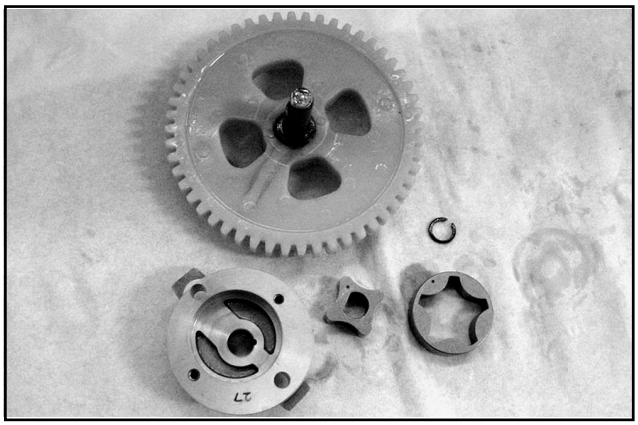

05_485

- Reassemble the rotors on the pump casing keeping the 2 references in sight.
- Insert the shaft and drive wheel and assemble the retaining ring and rotate it with the opening on the opposite side of the shaft facing.
- Check any anomalous plays between the shaft and pump casing.

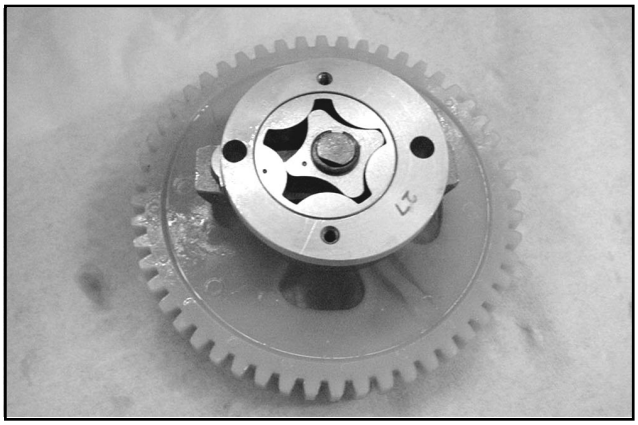

05_486

- Using a thickness gauge check the distance between the rotors in the position shown in the figure.

Clearance limit allowed: 0.012 mm

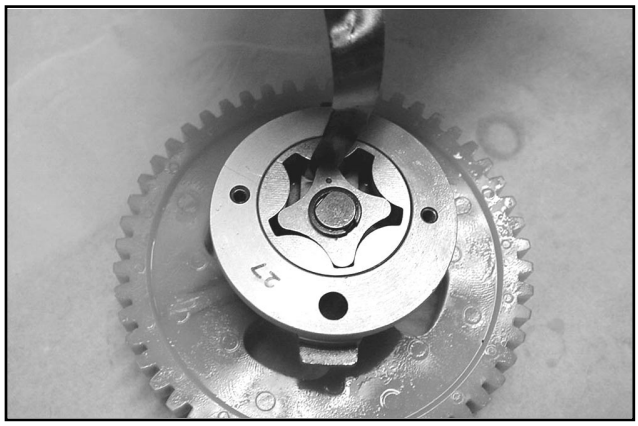

05_487

- Check the distance between the external rotor and the pump casing, see figure.

Clearance limit allowed: 0.25 mm

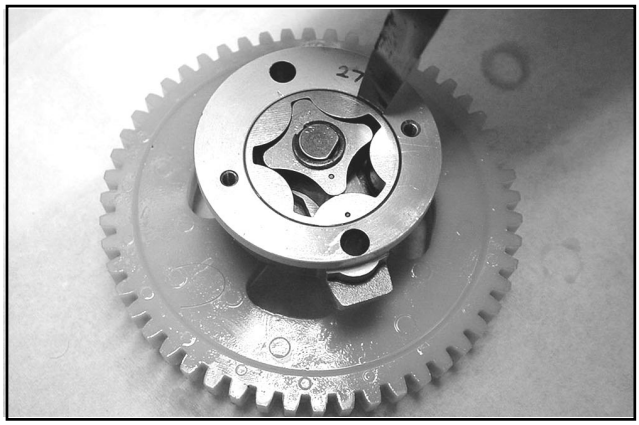

05_488

- Check the rotors end play using a ground bar as a reference plane as shown in the figure.

Value limit allowed: 0.1 mm

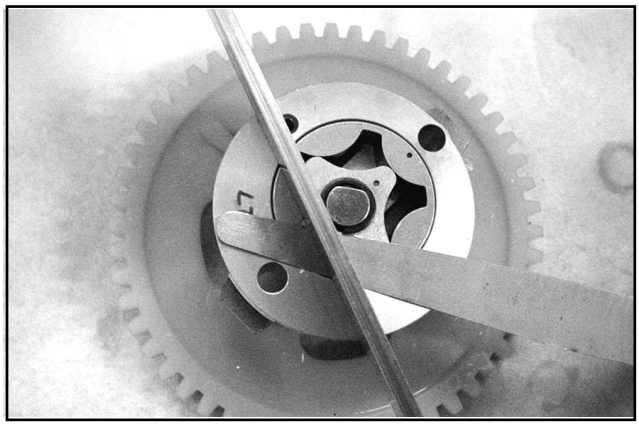

05_489

Oil pump assembly
- Lubricate the internal rotors.
- Check that the pump cover does not show signs of wear or scratching.
- On revealing non-conformant values or scratches, proceed with replacement.
- Assemble the pump cover in the position giving alignment of the holes for the fixing screws to the crankcase.

- Block the two fixing screws to the torque prescribed.

Tightening torque:
Oil pump coupling screws 0.7 - 0.9 N·m

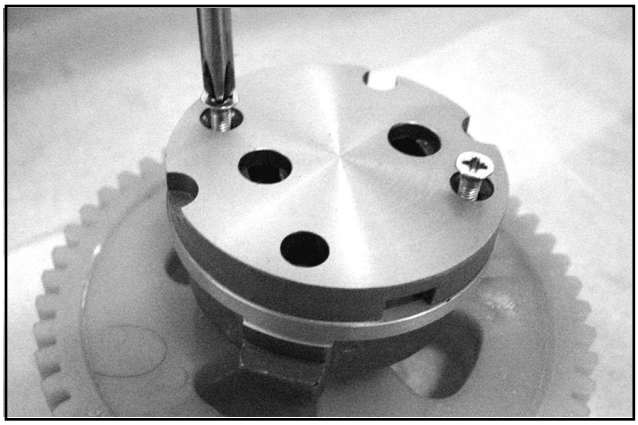

05_490

DIAGNOSTICS GUIDE

On discovering an oil leak from the coupling gasket of the flywheel cover or from the oil filter, proceed with lubrication pressure control.

↓

Install the specific tool.
Specific tools:
Manometer 020193Y
Adapter 020434Y

↓

- Check the system pressure with cold engine and medium-high running speed.
Standard pressure < 6 bar

YES ↓ Proceed with replacement of the damaged components.

NO ↓ Check the adjusting by-pass efficiency (see chapter 5-FLYWHEEL COVER) and reset the correct flow.

NOTE: The standard pressures are obtained using oil of the recommended viscosity. A greater viscosity leads to an increase in system pressure.

On discovering oil consumption greater than 250 gr/1000 km in a run in engine proceed as described below.

↓

Check the presence of oil in the recovery duct on the filter box.

YES ↓ Proceed with efficiency checks of the unidirectional reed valve and the drainage hole of the decanting chamber.

NO ↓ Reset efficiency of the valve or the drainage hole.

YES ↓ Proceed with seal checks of the thermal unit (elastic clamps, valve guides and oil seals), see chapter 7-THERMAL UNIT AND TIMING SYSTEM.

NO ↓ Proceed with seal checks of the thermal unit (elastic clamps, valve guides and oil seals), see chapter 7-THERMAL UNIT AND TIMING SYSTEM.

NOTE: Such an anomaly may occur also if the oil level is too high.
In this case the anomaly could be linked also to a malfunctioning of the fuel injection system due to occlusion of the throttle body ducts (see chapter 9- FUEL INJECTION).

TABLE OF CONTENTS

COOLING SYSTEM 11

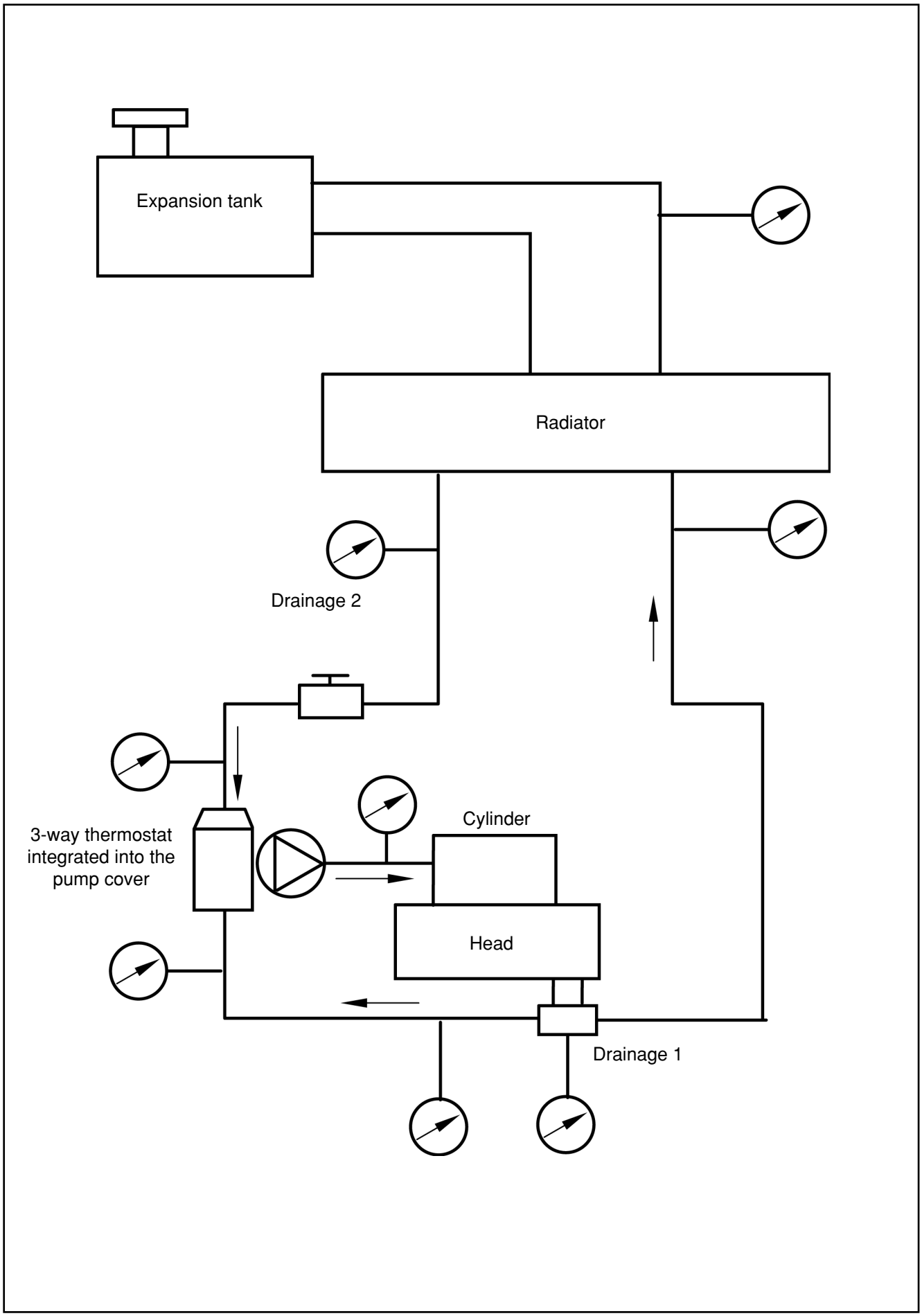
Expansion tank
Radiator
Drainage 2
3-way thermostat integrated into the pump cover
Cylinder
Head
Drainage 1

05_491

SPECIFICATIONS

Cooling system capacity	1.8 l
Recommended fluid	50% mixture of water and sealed circuit fluid (PARAFLU 11 FE)
Seal pressure	Plug calibrated to 0.9 bar

THERMOSTAT	Type	wax, with switch
	Initial opening	75 ± 2 °C
	Opening stroke at 90° C	4 mm
ELECTROVENTILATION	Type	injection operated
	Initial electroventilation	106° C
	End electroventilation	98° C
WATER PUMP	Type	centrifuge
	Command	coaxial to the counter shaft
RADIATOR	Type	in aluminium with horizontal circulation
EXPANSION TANK	Type	self-discharging, parallel to the radiator

System description

The cooling system is made with a centrifuge pump coaxial to the counter shaft and as such completes a number of revolutions identical to that of the driving shaft.
The pump has two ducts, one for inlet and one for outlet.
The outlet duct feeds the cylinder and consequently the head; the inlet duct leads from the head and its entrance to the pump is controlled by the thermostat plate.
The main seal of the thermostat acts instead on the main pump inlet duct leading from the radiator.
The radiator is fed from the head outlet; the expansion tank is inserted parallel to the radiator with the ducts on two levels: the delivery high up (in the air) and the fluid backflow low down (in the fluid).
The system composed in this way is a 2-way type.
The first way is the internal engine circulation and involves the pump, cylinder and head; this circulation is fully active when the thermostat is fully closed.
The second way is active with the thermostat fully open and is the main circulation which involves the pump, cylinder, head, radiator and expansion tank; for medium openings of the thermostat, however, the two circuits are both partially inserted, therefore the two ways are superimposed.
This kind of circuit is defined as the type with inlet thermostat. The thermostat is crossed by an inverted flow, that is with cold water which tends to lower the temperature of the wax cell.
This system allows optimization of the engine heating phases.
The expansion tank, parallel to the radiator and inserted on the main circuit, guarantees self-drainage when working.
For the filling stages of the system there are two drains: one on entry to the pump and one exiting from the head (see filling rules).
The electrical fan is operated by the fuel injection system with temperature measured on the engine head.

System filling rule

- Prepare the 50-50 mixture of water and coolant;
- Fill the system up to the level between MIN and MAX shown on the filling hole of the expansion tank;
- Do not close the expansion tank with the plug.

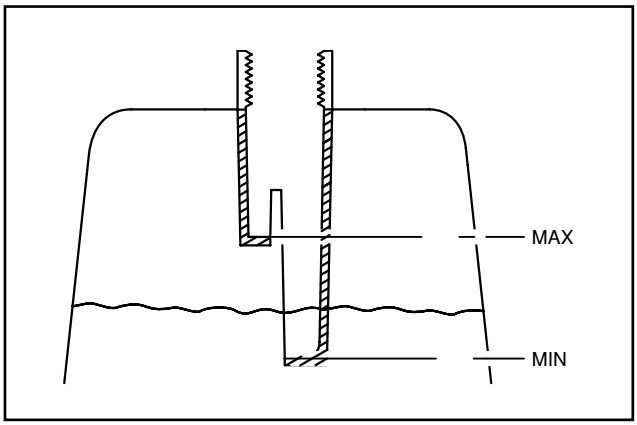

05_492

- Loosen the drain screw situated on the pump intake sleeve controlled by the thermostat;
- Keep it open until the air discharge has stopped completely;
- Retighten the drain screw.

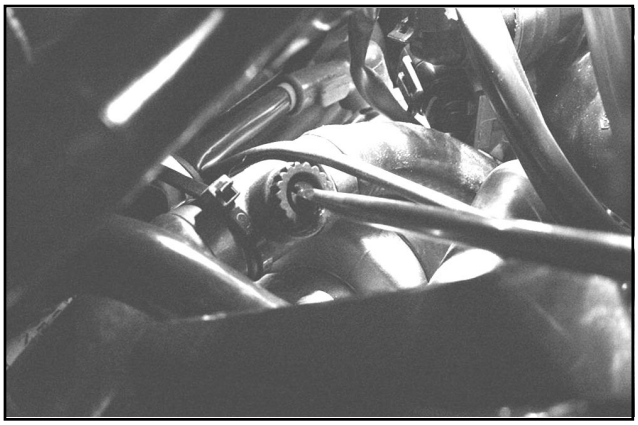

05_493

- Loosen the drain situated on the joint exiting from the head;
- Keep it open until the air discharge has stopped completely;
- Retighten the drain screw;
- Start the engine for a few seconds;
- Repeat the drain operation at the head exit;
- Repeat these operations several times until only fluid is discharged;
- Reset the level in the expansion tank and screw on the plug;
- Start the engine and allow it to warm up until the electroventilation temperature is reached;
- Stop the engine;
- Reset the level with a cold engine.

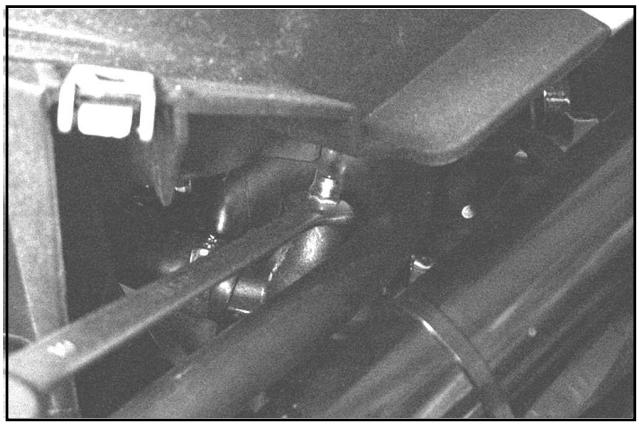

05_494

Warning - The electroventilation is controlled through the temperature measured at the head.
Activation of the fan cannot be considered an indication of completed discharge.
The discharge can be considered complete when a temperature increase is noted in the expansion tank.

Thermostat control

Before dismantling it is advisable to carry out certain checks:
- Connect the diagnosis tester and select the “PARAMETERS” function(see Chapter 4-FUEL INJECTION);
- Start the engine from cold and allow it to warm.

Specific tool:
Fuel injection diagnosis tester: 020460Y

- Check manually the moment in which heating commences in the left box of the radiator;
- Check the temperature indicated on the diagnosis tester.

Initial thermostat opening: ~ 75° C

N.B.: The temperature measured by the tester is that of the head outlet, whilst the true thermostat temperature is referred to the pump inlet.

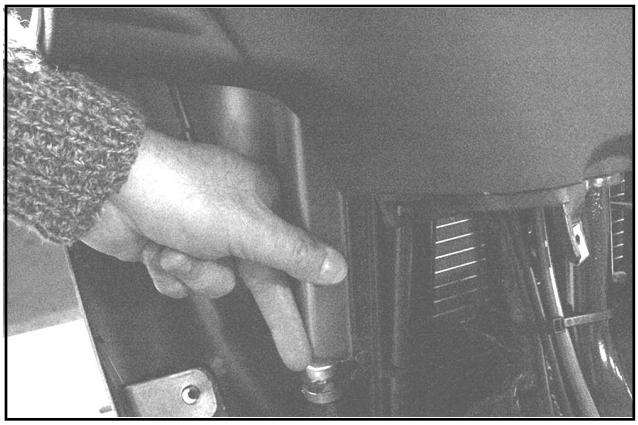

05_495

- On revealing values or gradual heating considerably different to that of the engine, proceed with thermostat control;
- Remove the thermostat cover and the thermostat itself as described in Chapter 5- FLYWHEEL COVER.

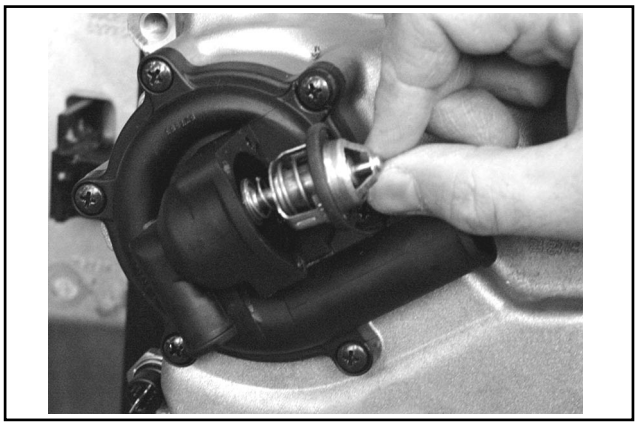

05_084

- Visually check that the thermostat has no mechanical damage;
- Prepare a metal container with ~ 1 litre of water;
- Immerse the thermostat keeping it to the centre of the container;
- Immerse the thermometer probe of the multimeter near to the thermostat;
- Heat the container with a heat gun;
- Check the temperature at initial opening of the thermostat.

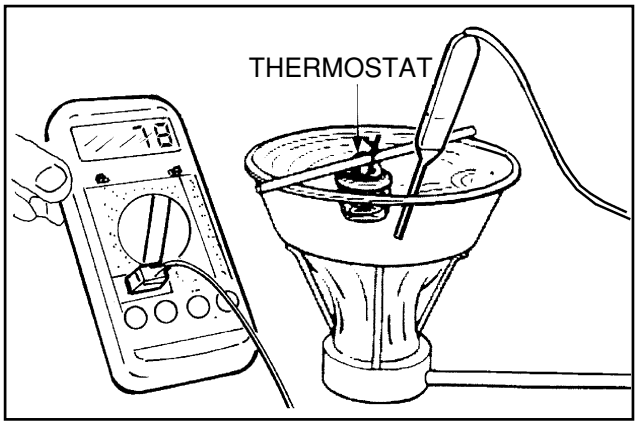

05_496

Initial opening temperature: ~ 75° C

Specific tools:

Multimeter	**020331Y**
Heater	**020151Y**

- Continue to heat until the thermostat is fully opened:

Opening length: 4 mm a 90 ± 2 °C

N.B.: Heating must be seen as gradual.

Warning - For correct trial testing, avoid direct contact between the thermostat and the container.

- On revealing incorrect values, replace the thermostat;
- Reassemble the thermostat and its cover as described in Chapter 5-FLYWHEEL COVER;
- Repeat the procedure from filling to discharge.

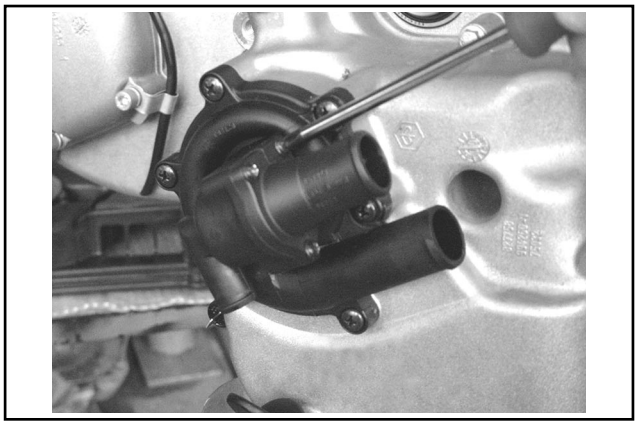

05_083

Electroventilation control

- Connect the fuel injection diagnosis tester and select the “ERRORS” function from the menu.
- Check the presence of anomalies in the electrical fan control circuit (See Chapter “FUEL INJECTION”).

Specific tool:
Fuel injection diagnosis tester 020460Y

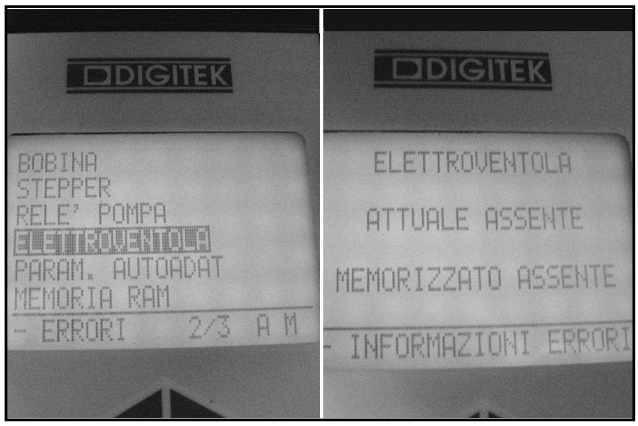

05_497

- Select the “ACTIVE DIAGNOSIS” function from the menu and command working simulation of the electrical fan (see Chapter 9-FUEL INJECTION);
- With a certainly efficient electrical fan, check the initial temperature after ventilation.

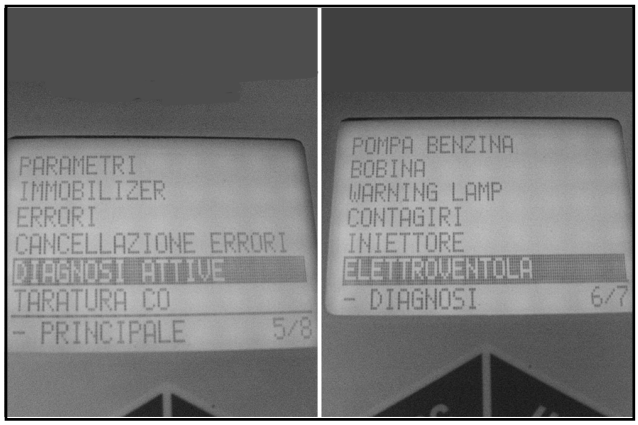

05_498

- Select the “PARAMETERS” function from the menu, visualizing the coolant temperature.

Electrical fan activation: 106° C
Electrical fan disactivation: 98° C

- On revealing non-conformant values proceed with replacement of the fuel injection control box (see Chapter 9-FUEL INJECTION);
- If the temperature indication on the analogic instrument is close to the red area, but the indication in degrees on the diagnosis tester is less than the electrical fan temperature, proceed with a check on the head temperature sensor and related fuel injection circuit (see Chapter 9-FUEL INJECTION);

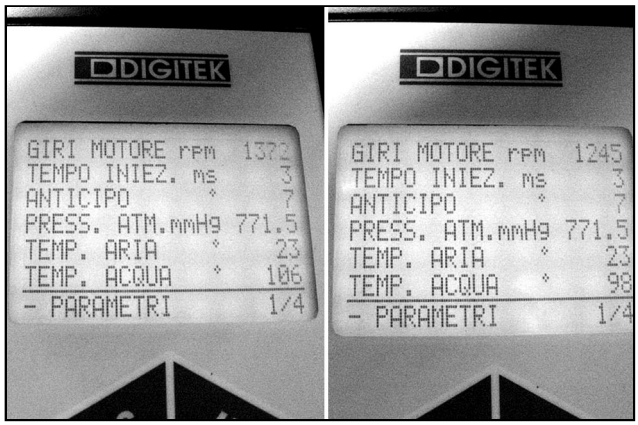

05_499

N.B.: The electroventilation temperature of 106° C is manageable only with a system filled with a 50-50 mixture and pressurized to 0.9 bar.
Avoid engine functioning without pressurization so as not to risk overheating the engine without having first inserted the electrical fan.
If the electroventilation times increase, check the initial opening temperature of the thermostat and the correctness of coolant density.
Optimum density is obtained with a 50-50 mixture of water and circuit coolant.

System seal control

- Check adequate seal of the circuit when it is under pressure and heated;
- For a more complete control wait until the system has cooled because small leaks, invisible due to evaporation phenomena, may occur;
- The water pump has a drainage hole for any leaks resulting from mechanical seal of the cooling system or of the oil seal from the spindle seal;
- On discovery of coolant or oil leaks, proceed with overhaul of the pump (see Chapter 5-FLYWHEEL COVER).

N.B.: During repairs on the cooling system, do not use grease or oils. Failure to respect this regulation causes permanent deformation of the gasket seals.

Diagnostics guide

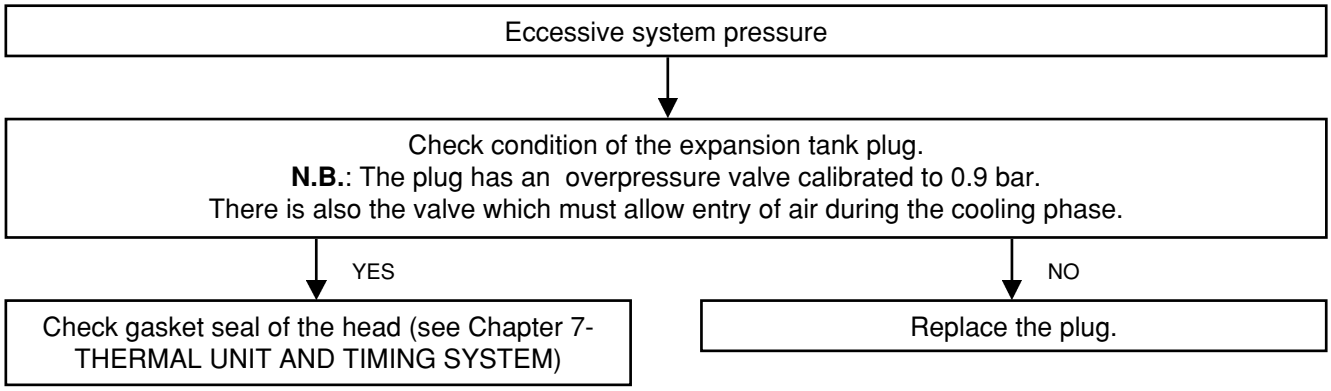

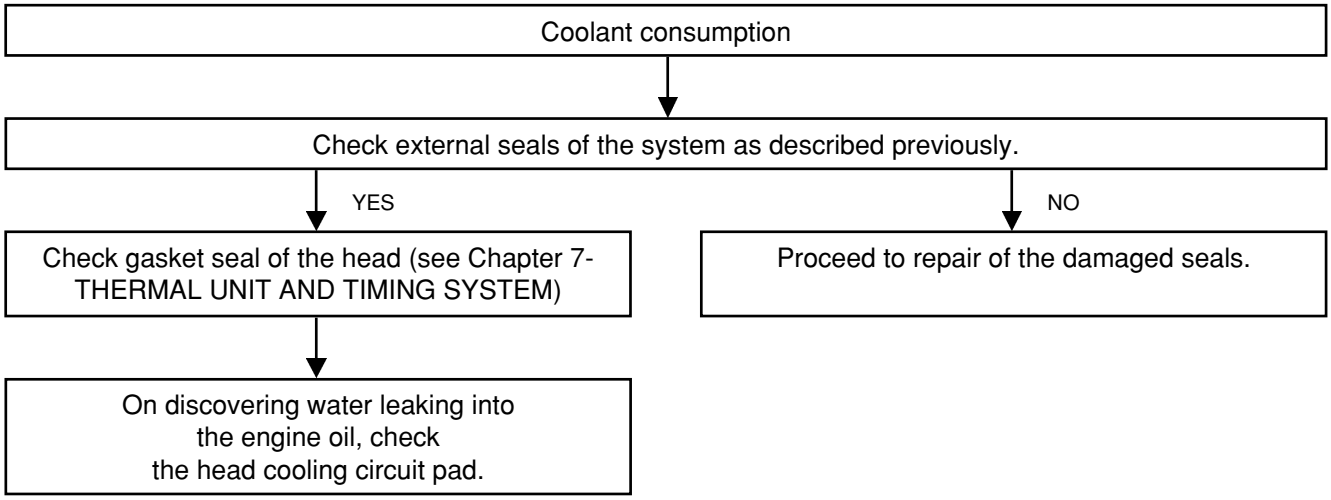

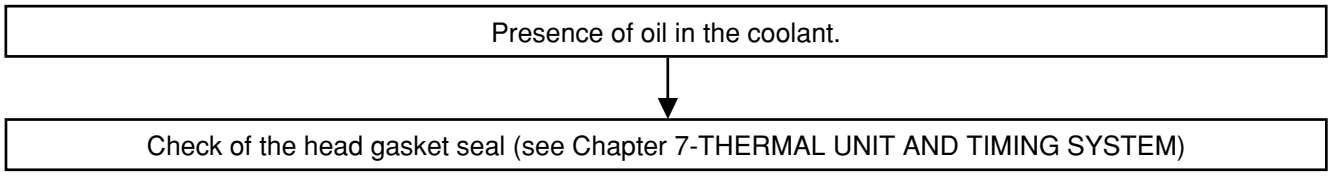

TABLE OF CONTENCTS

STARTING 12

SPECIFICATIONS

STARTING MOTOR	Type	MITSUBA SM13D
	Power	0.9 kW
BATTERY	Capacity	14Ah
	Starting current	125 A
SOLENOID STARTER	Type	HERMETIC
	Capacity	150A continuous
STARTING TRANSMISSION	Crown and free wheel coaxial to the flywheel. Idler gear integrated with torque limiter.	

Starting system description

The starting system transmission is between the rotor of the motor and driving shaft with free wheel coaxial to the flywheel and torque limiter on the intermediate shaft.
The limiter is calibrated to 10 Kgm (100 N·m); the function of this component is to safeguard engine structure and engine ignition kinematism in case of incorrect engine ignition manoevre with subsequent voltage build-up of inverse revolution.
The free wheel allows a suitably silent starting.
Command of the starting (excitation of the solenoid starter) is slaved by consensus of the side stand and the OFF/RUN emergency switch, thus not allowing ignition in dangerous conditions.
The engine ignition command circuit is not controlled by the immobilizer system, so before activating the engine ignition system in an anomalous manner, check the consensus of the immobilzer.
With regard to checking the consensus circuit, see Chapter 4-ELECTRICAL EQUIPMENT in the X9 500 cc vehicle Service Station Manual; whilst for controls of the driving shaft command transmission, take action as described in Chapter 6-FLYWHEEL AND ENGINE IGNITION SYSTEM.

Controls and diagnostics guide

The starting motor is marketed as complete.
Before deciding to replace it, it is necessary to proceed with the following checks:

Battery
Check repose tension (several hours).
Tension > 12,5 V.
Check the electrolyte density of each element.
Bé = 30 - 32
Specific weight: 1.25 - 1.26

NO → Recharge and if necessary replace the battery

YES ↓

Check correct connection of the negative terminals (battery negative and starting motor negative) between themselves and the chassis.

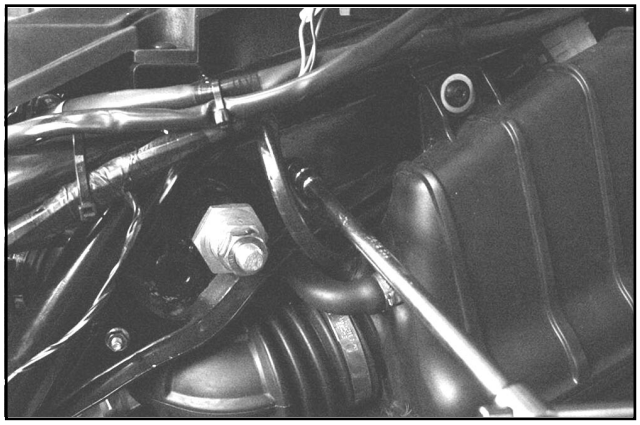

NO → Reset the connections.

YES ↓

Connect the diagnosis tester di 020460Y (see Chapter 9-FUEL INJECTION).
Connect the induction pliers of an amperometer to the positive feed cable of the starting motor.
Remove the 10A fuse N° 2 (see Chapter 9-FUEL INJECTION).
Set to "ON" with the switch on "RUN" and side stand raised.
Select the "PARAMETERS" function, page 1-3.

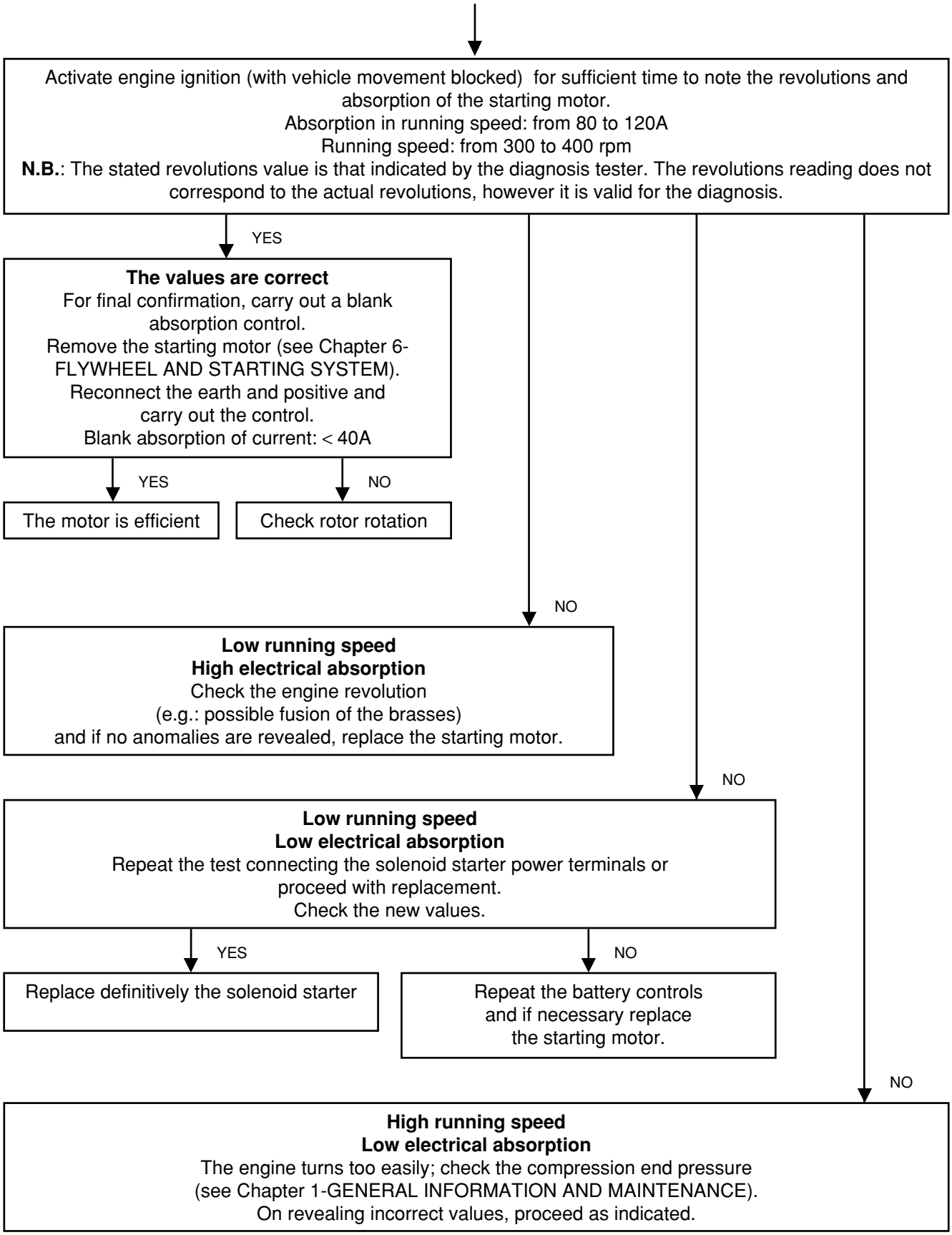

N.B.: If the running speed of the driving shaft proves to be low and is coupled with anomalous noise, proceed with checks of the free wheel and the torque limiter (see Chapter 6- MAGNETO FLYWHEEL AND STARTING SYSTEM.

BR-500 OUTLOOK PARTS

BR-500 PLASTIC PARTS COLOR CODE TABLE

ITEM	ENGLISH NAME	CHINESE NAME	ORANGE	BENZ-BLACK	SNOW WHITE	REMARKS
項次	英文名稱	中文名稱	2R	69	71	備註
1	CEILING COVER	頂棚蓋(繽紛橘)	B86250002R00	B86250006900	B86250007100	
2	WINDSHIELD,FRT ABOVE	前上擋風板 (繽紛橘)	B86210002R00	B86210006900	B86210007100	
3	LEFT UP FENDER	左上檔泥板 (繽紛橘)	B86310002R00	B86310006900	B86310007100	
4	RIGHT UP FENDER	右上檔泥板 (繽紛橘)	B863A0002R00	B863A0006900	B863A0007100	
5	REAR BODY COVER,LH	左後車身蓋 (繽紛橘)	B86250202R00	B86250206900	B86250207100	
6	REAR BODY COVER,RH	右後車身蓋 (繽紛橘)	B862E0202R00	B862E0206900	B862E0207100	
7	REAR FENDER,LH	左後檔泥板 (超黑)	B86340006500	B86340006500	B86340006500	
8	REAR FENDER,RH	右後檔泥板 (超黑)	B863D0006500	B863D0006500	B863D0006500	
9	LEFT DOWN FENDER	左下檔泥板 (超黑)	B86310106500	B86310106500	B86310106500	
10	RIGHT DOWN FENDER	右下檔泥板 (超黑)	B863A0106500	B863A0106500	B863A0106500	
11	LEFT COVER	左護蓋(平光黑)	B86250106800	B86250106800	B86250106800	
12	RIGHT COVER	右護蓋(平光黑)	B862E0106800	B862E0106800	B862E0106800	
13	PLATE SIDE LH	左側飾板	B84210500000	B84210500000	B84210500000	
14	PLATE SIDE RH	右側飾板	B842A0500000	B842A0500000	B842A0500000	
15	WINDSHIELD,FRT LOWER	前下擋風板 (平光黑)	B86210106800	B86210106800	B86210106800	

E1. Engine complete

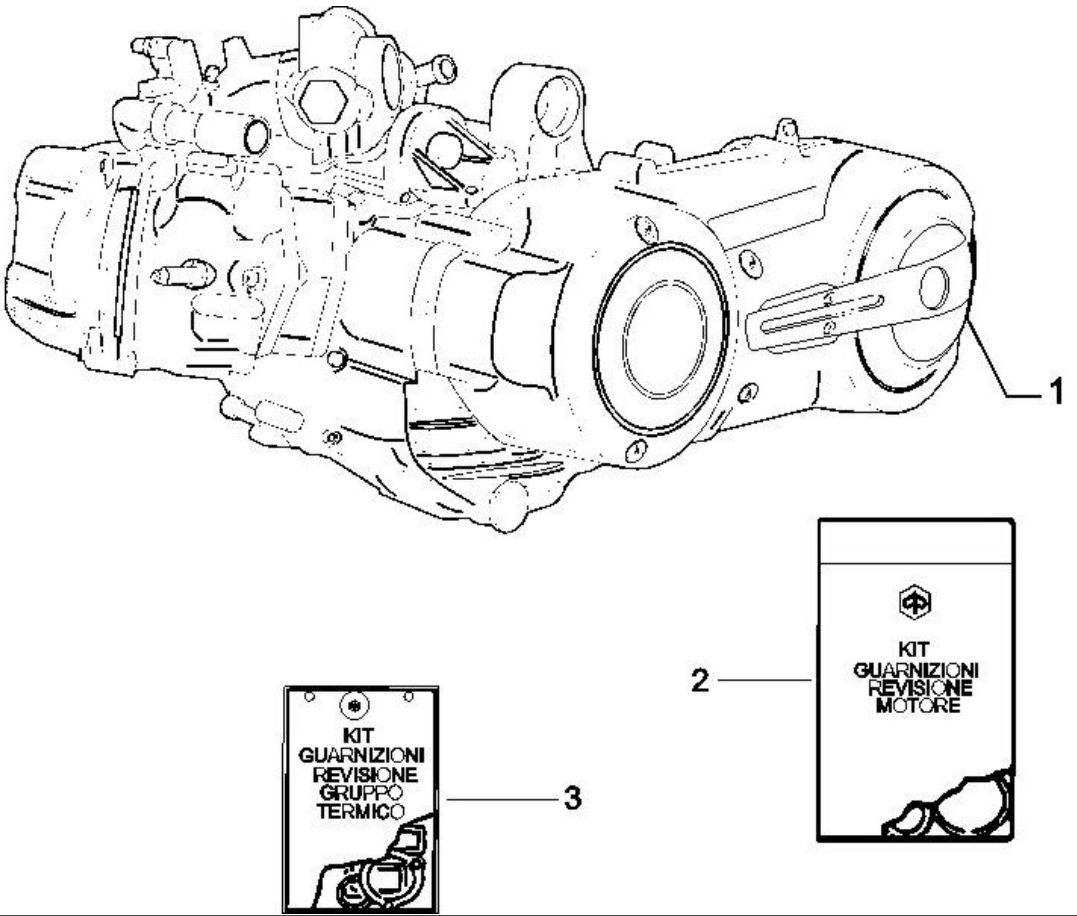

E2. Crankcase

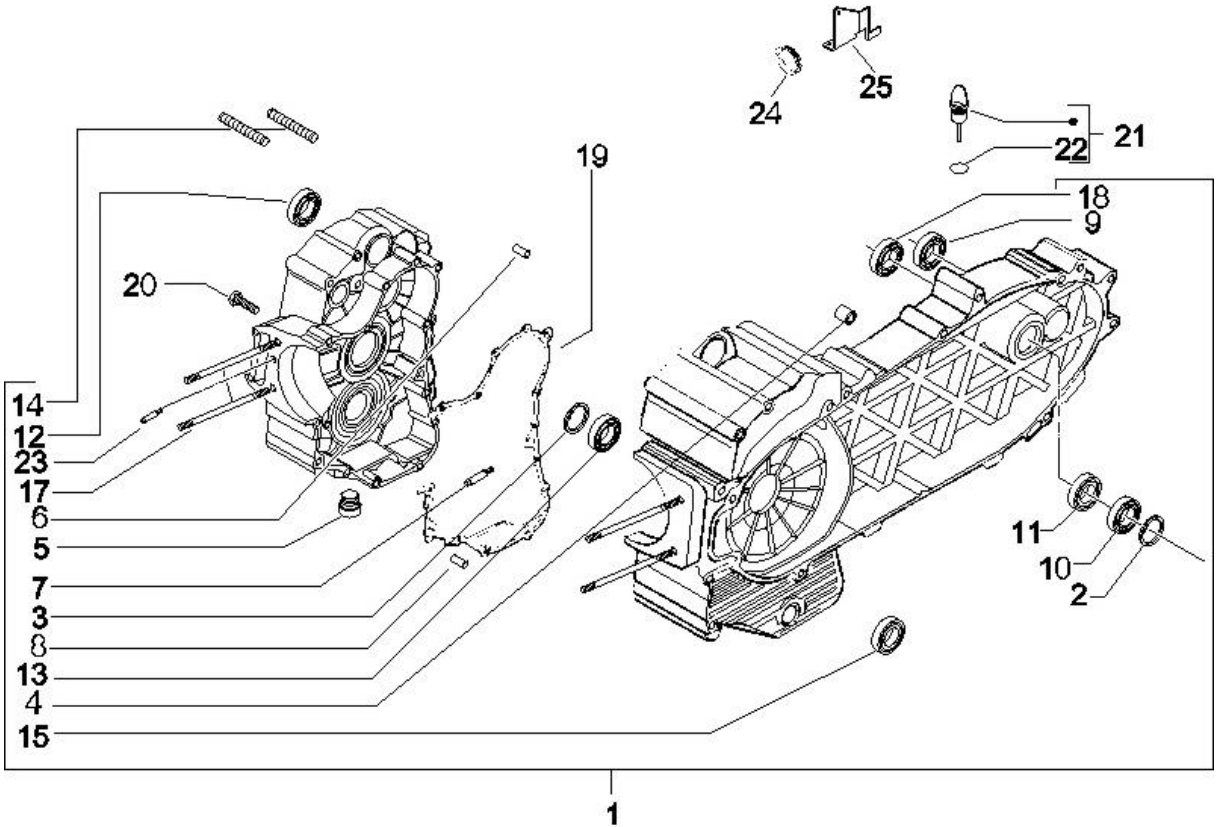

E3. Crankshaft

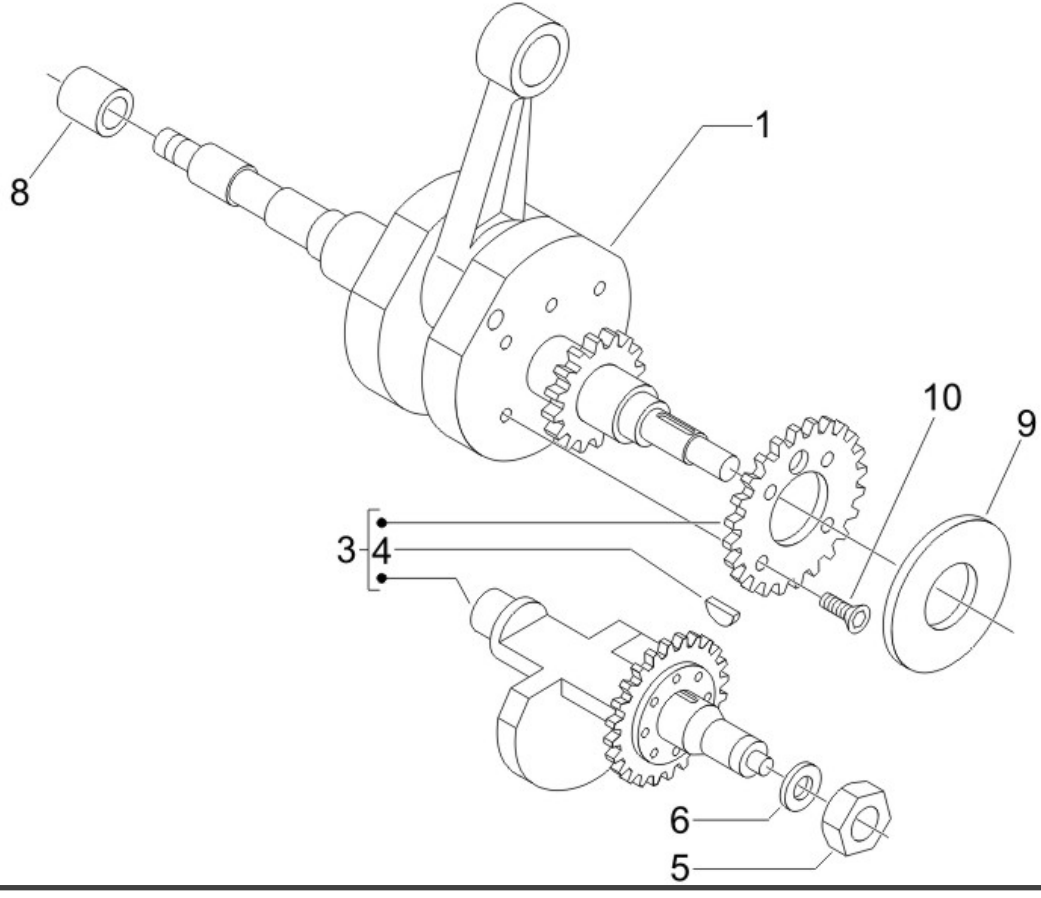

E4. Cylinder & Piston Set

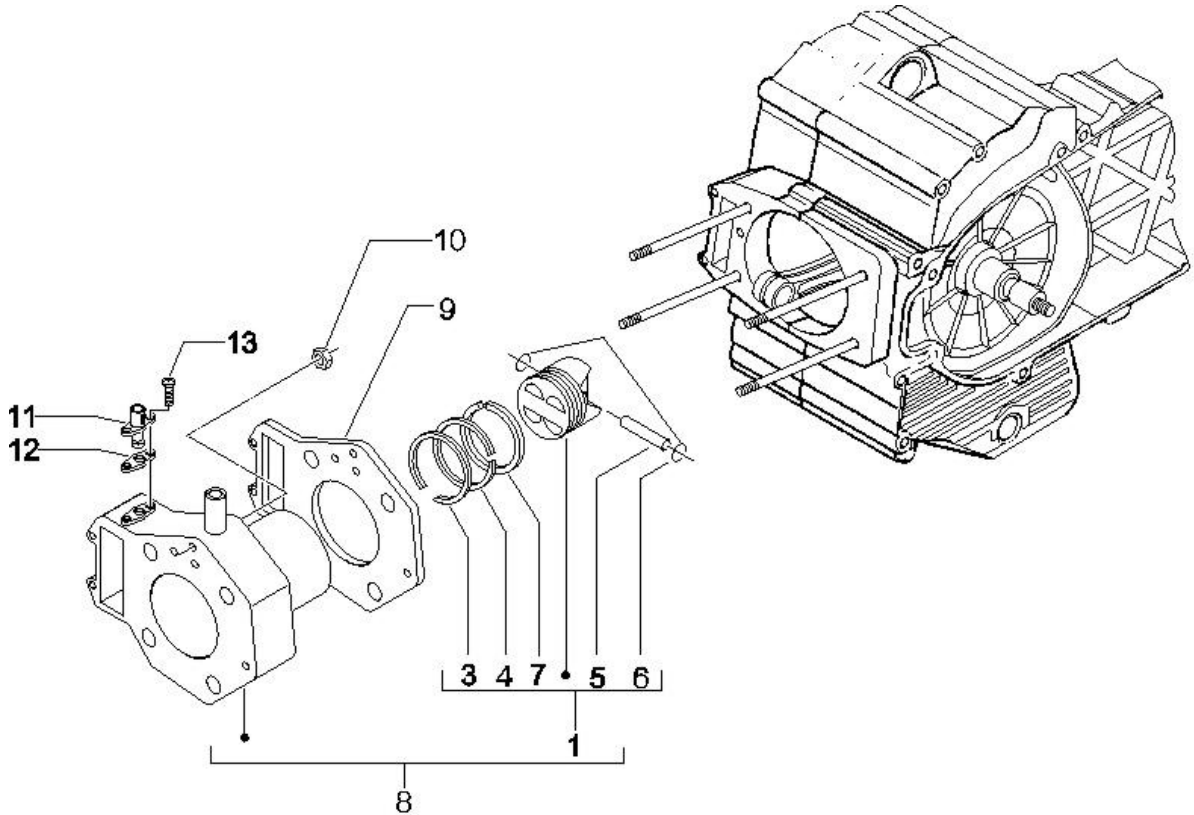

E5.Cylinder Head

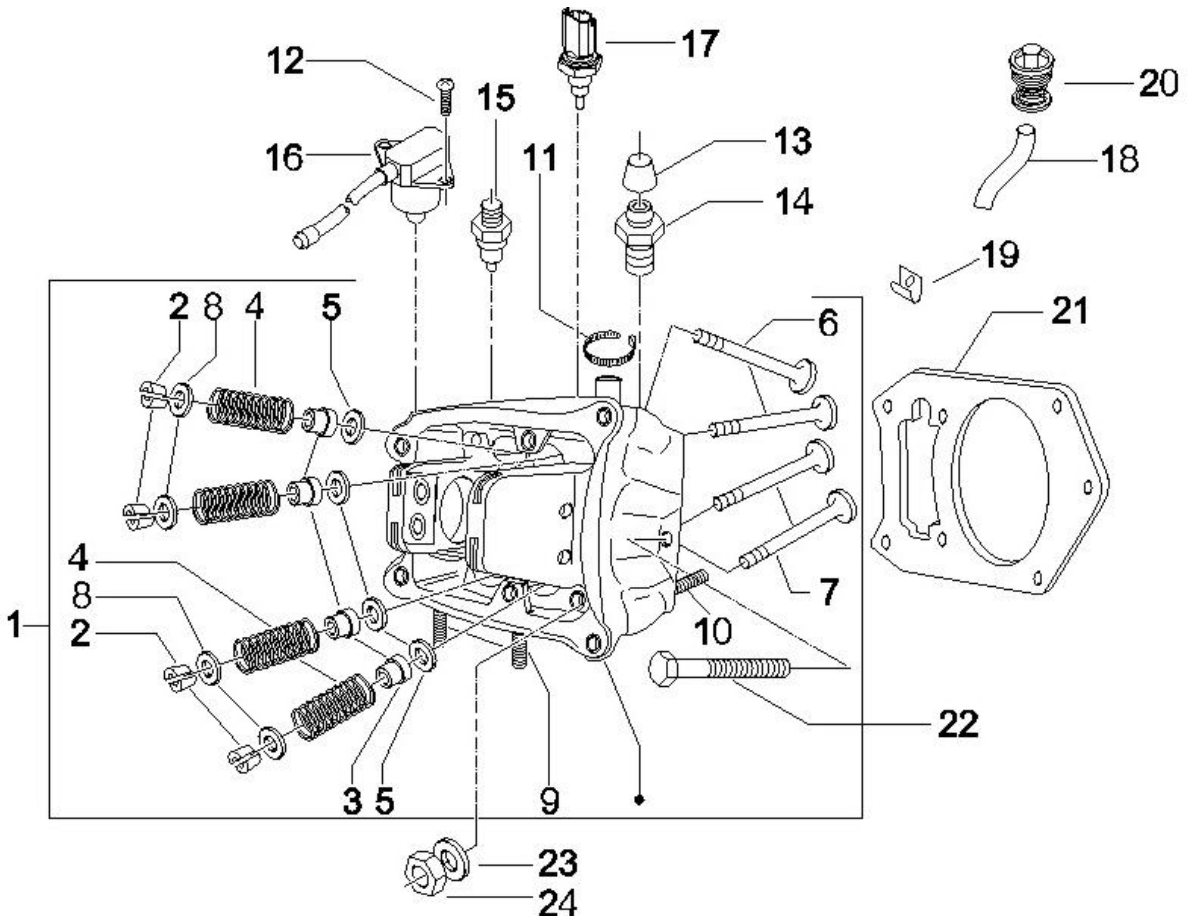

E6. Camshaft & Rocker Arm

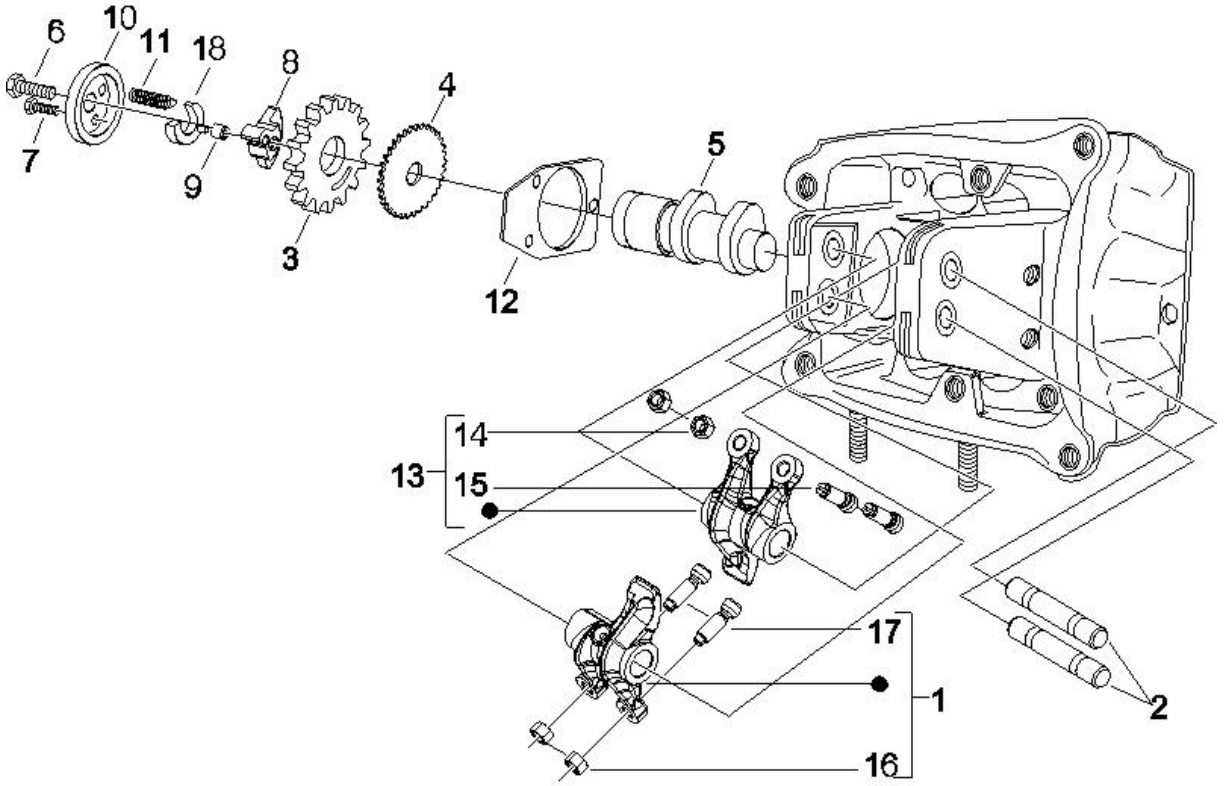

E7. CyliderHead Cover

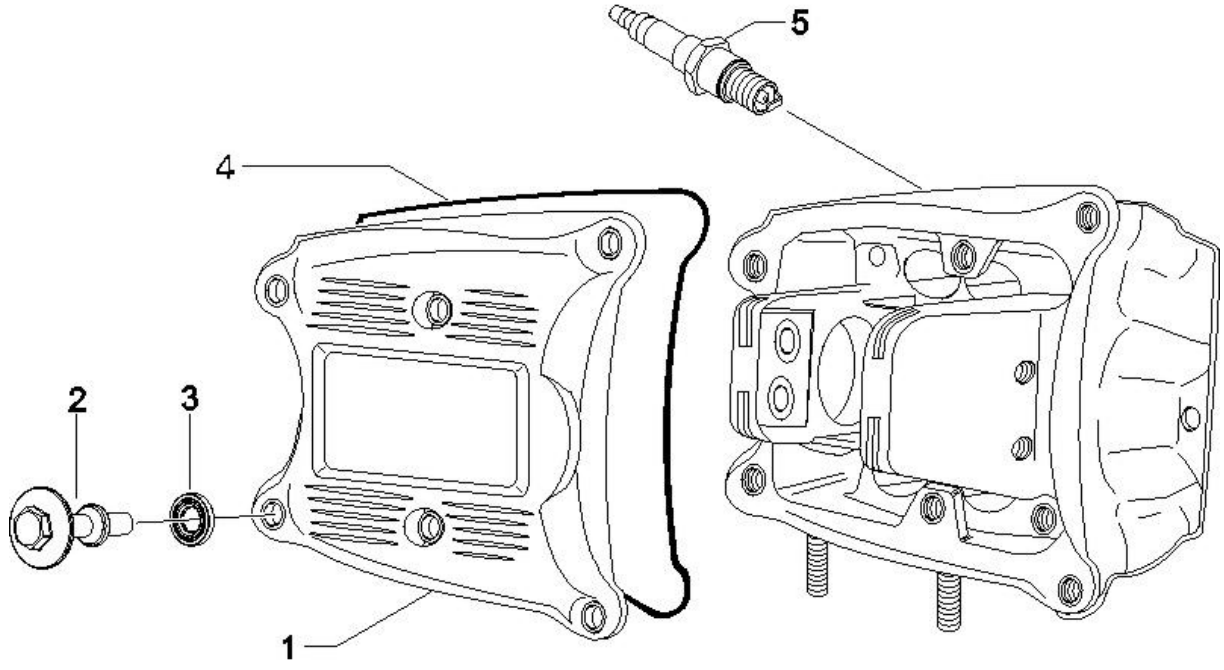

E8. Driving Pulley

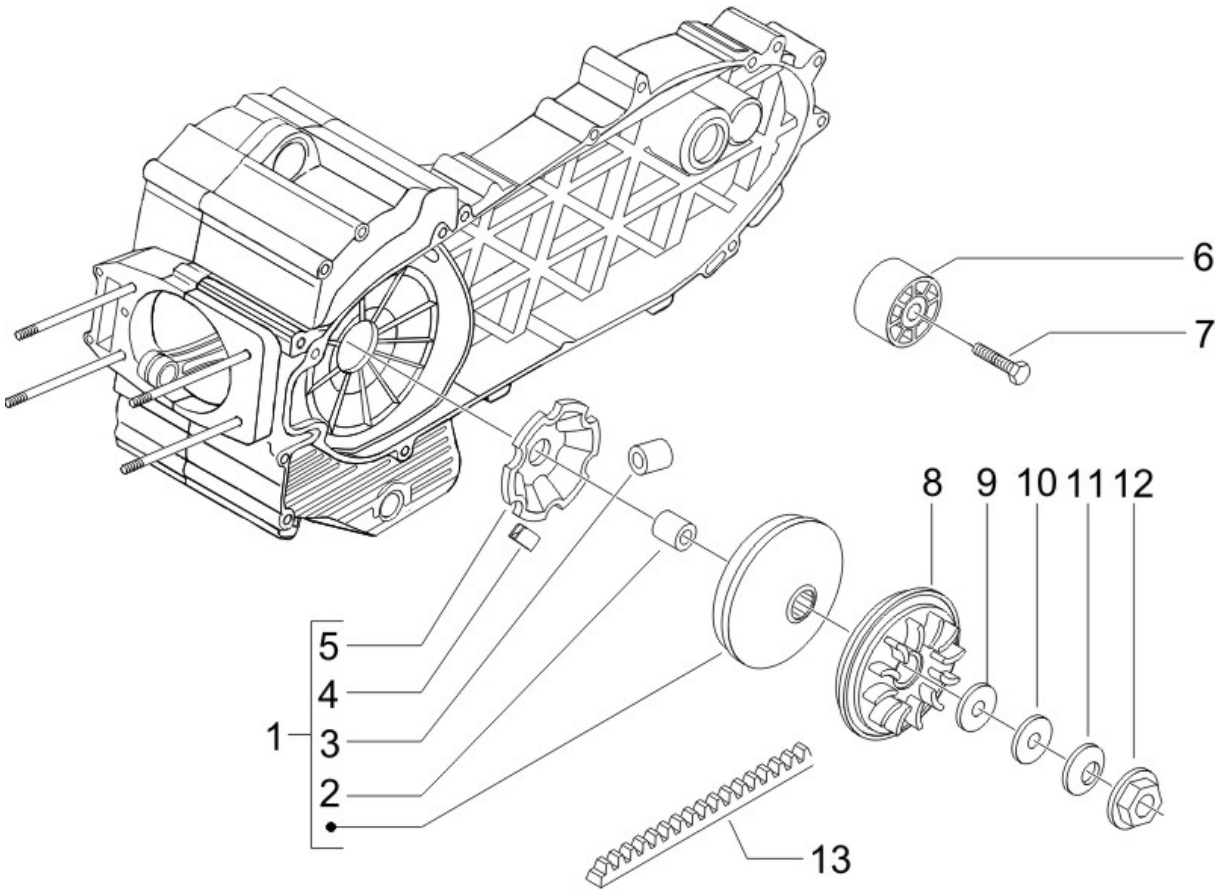

E9.Clutch Pulley

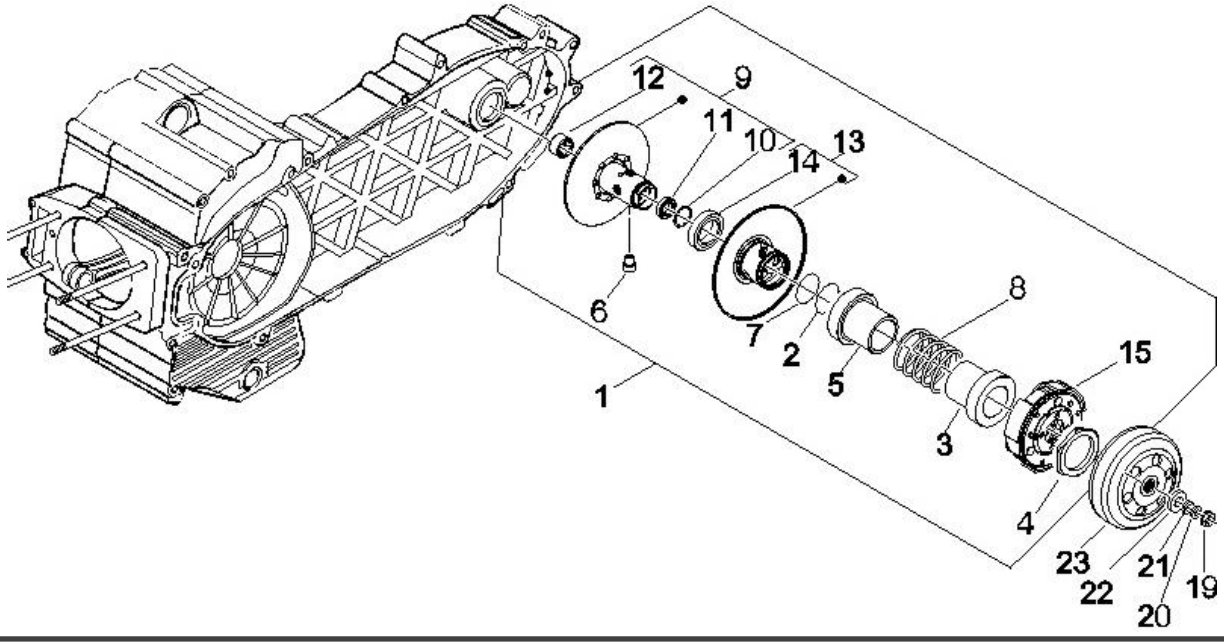

E10. Engine Cover

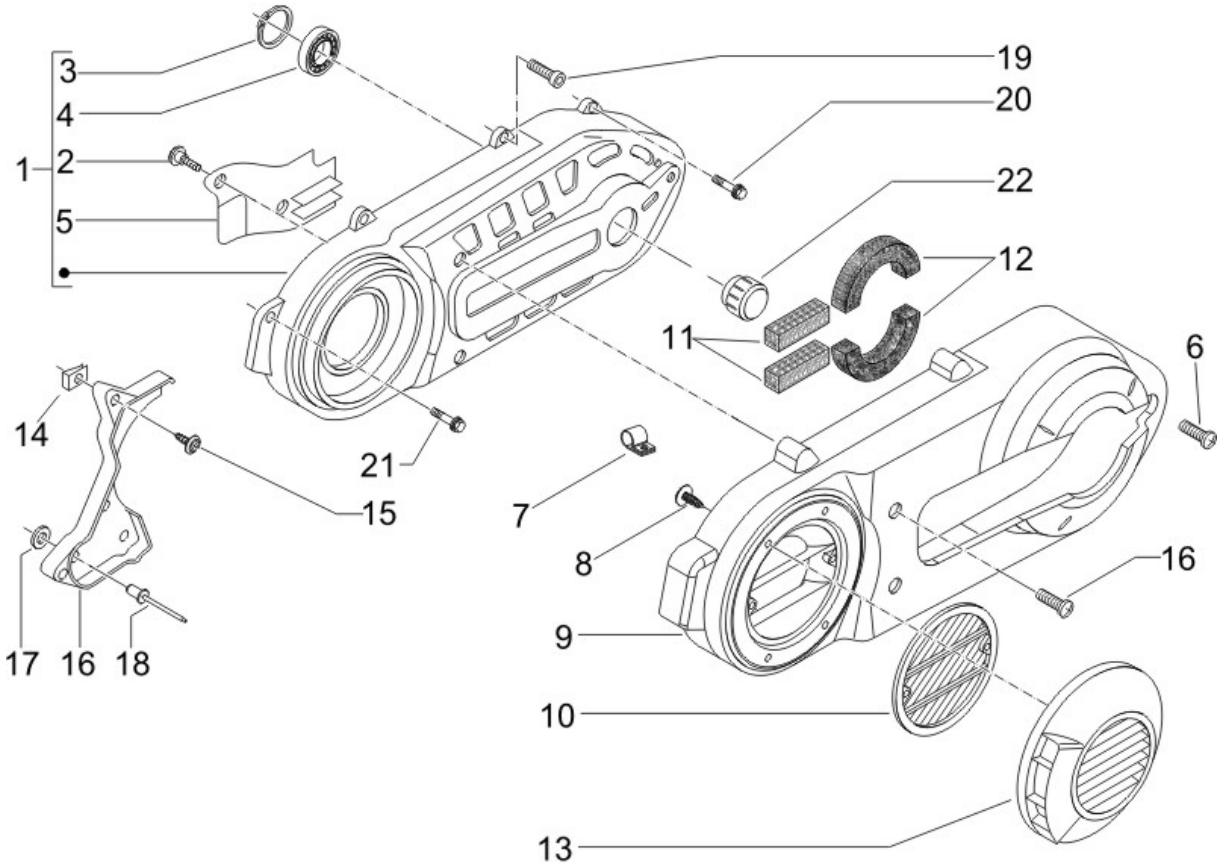

E11. Oil Pump assy.

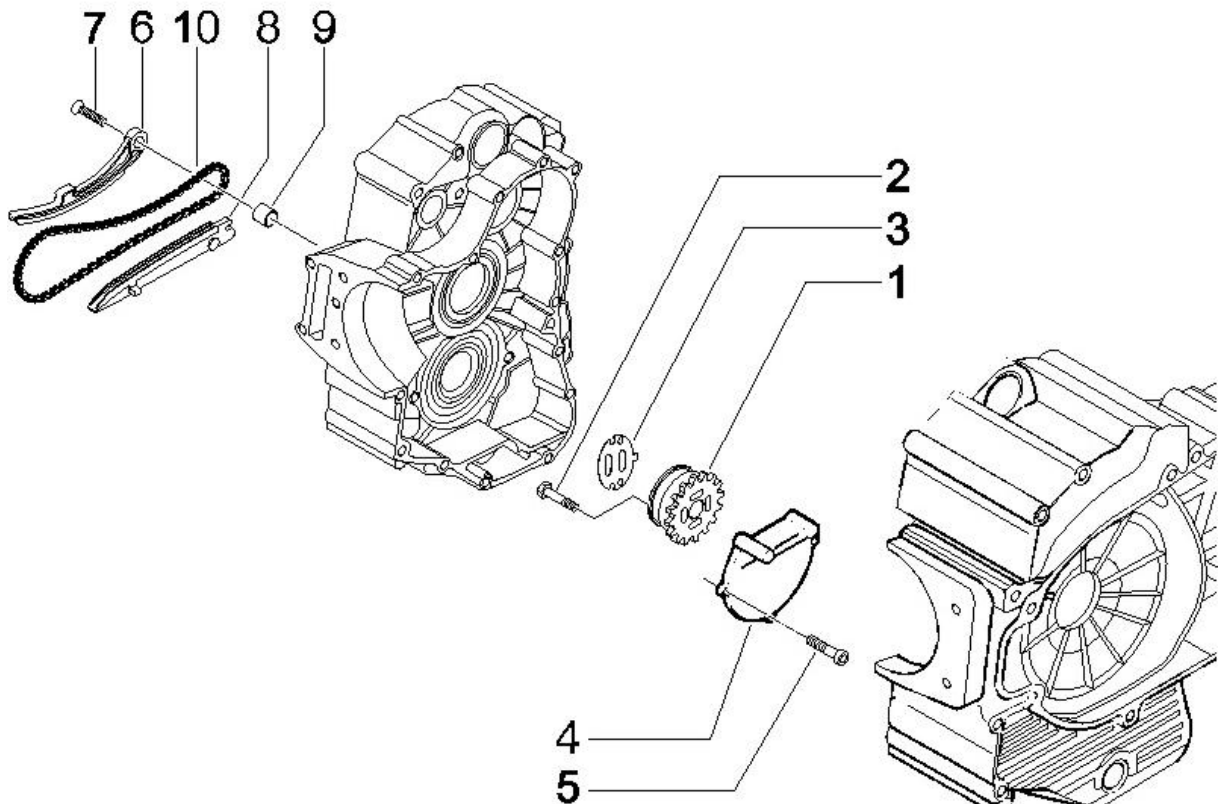

E12. Water Pump assy.

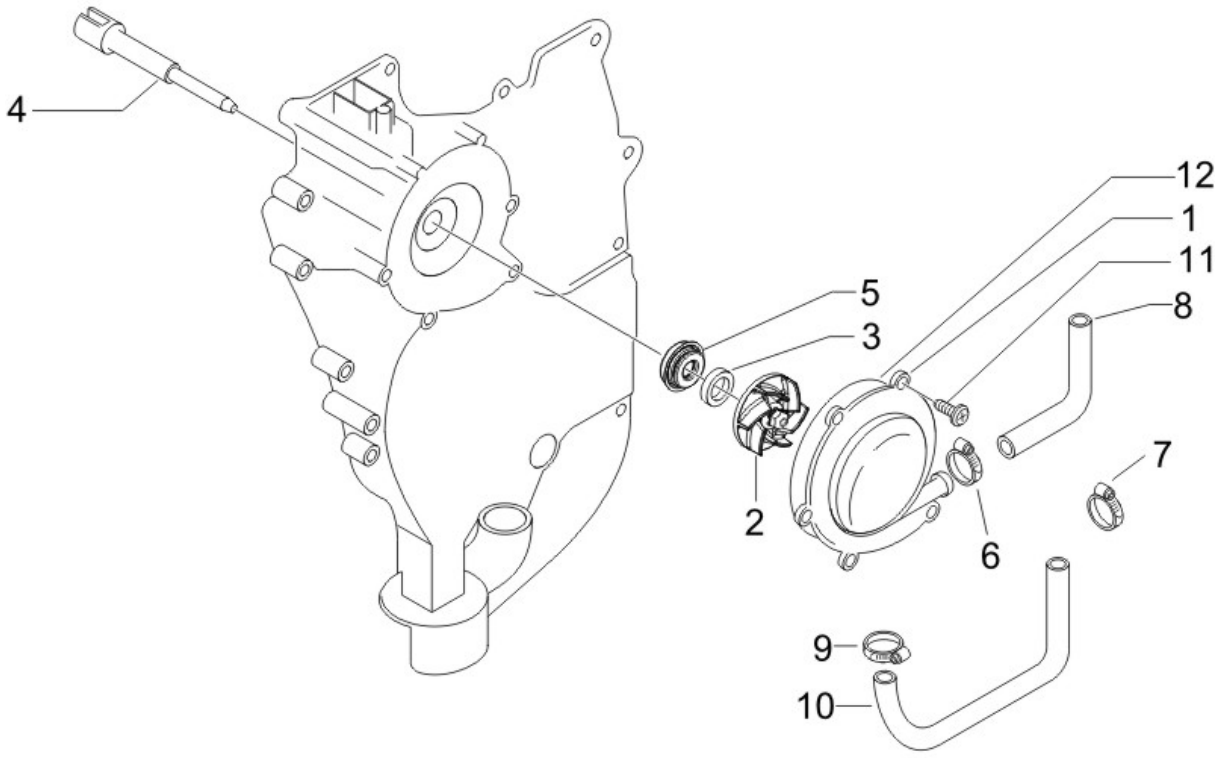

E13. Starting Motor

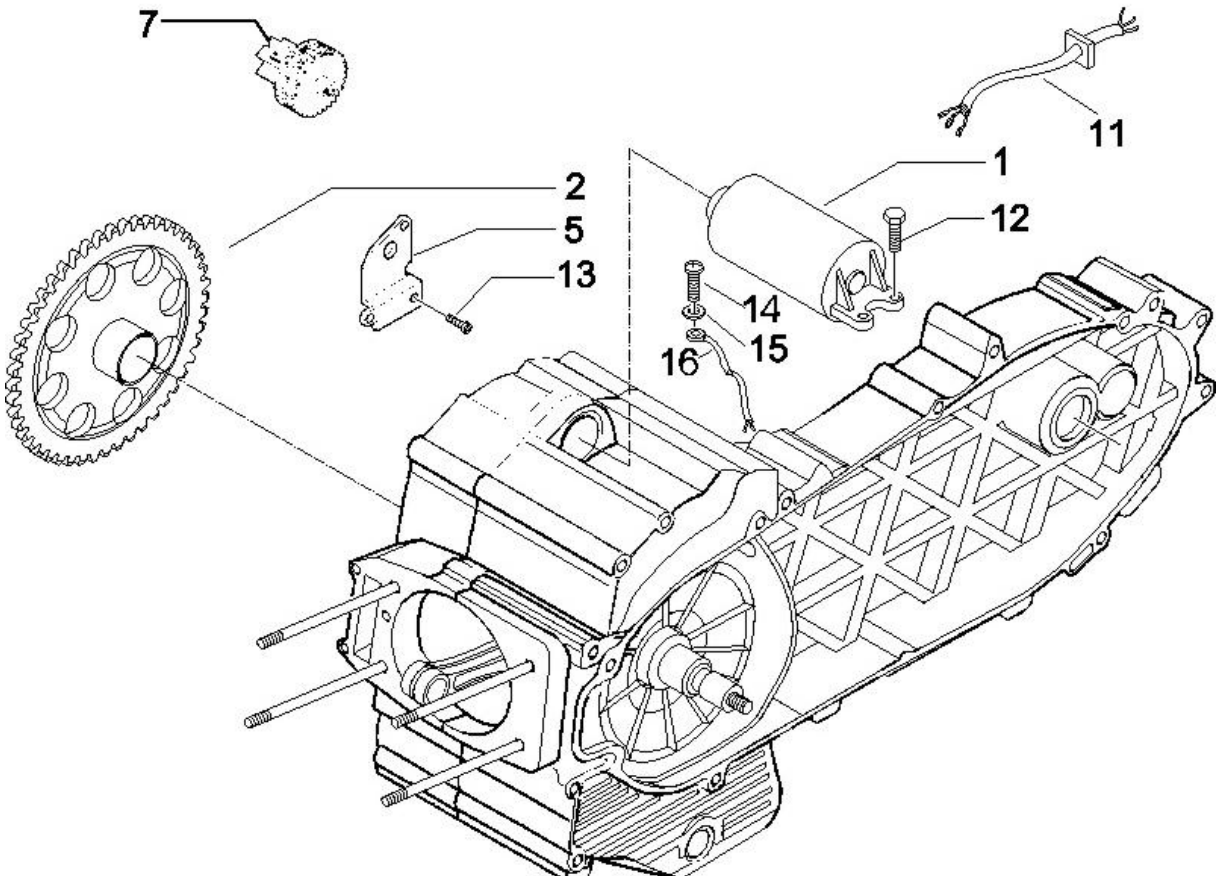

E14. Generator

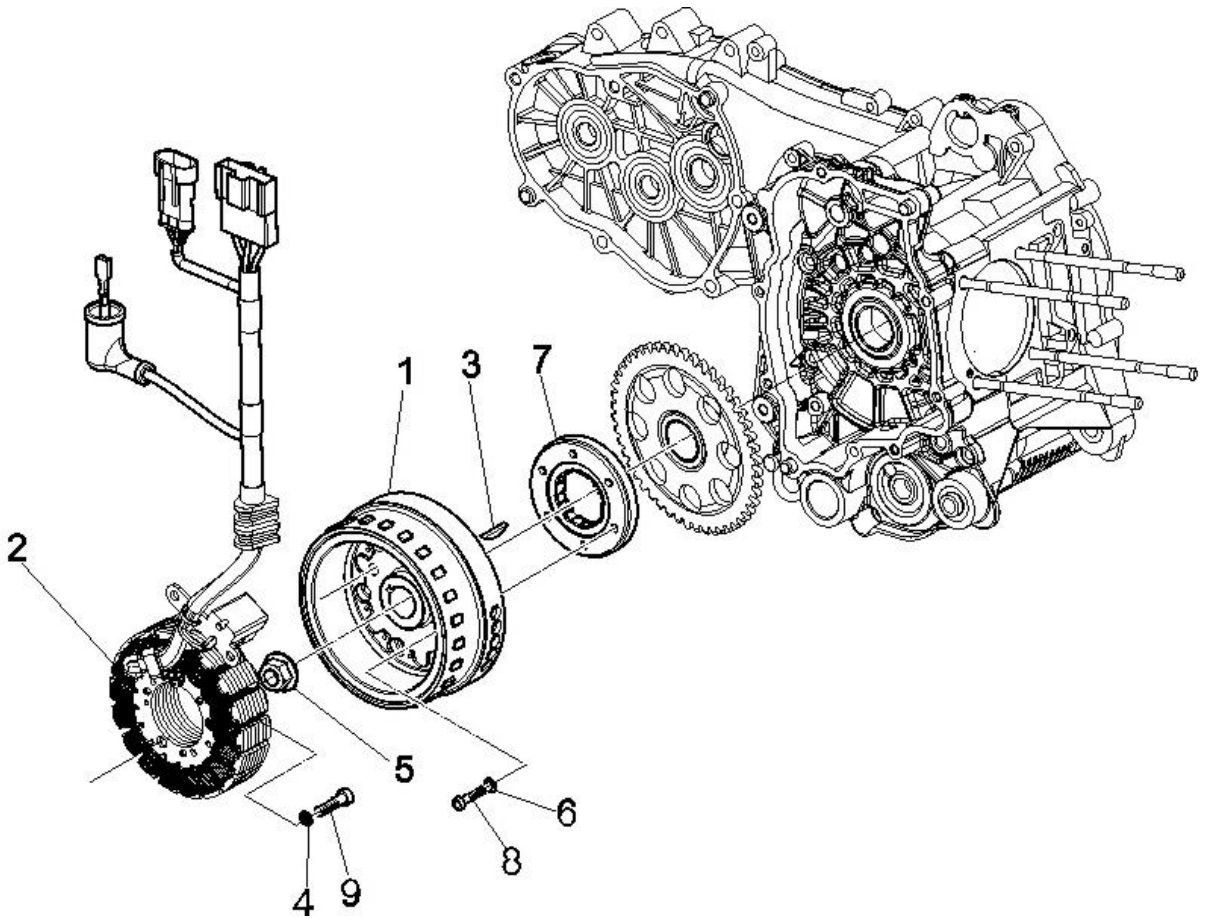

E15. Oil Filter

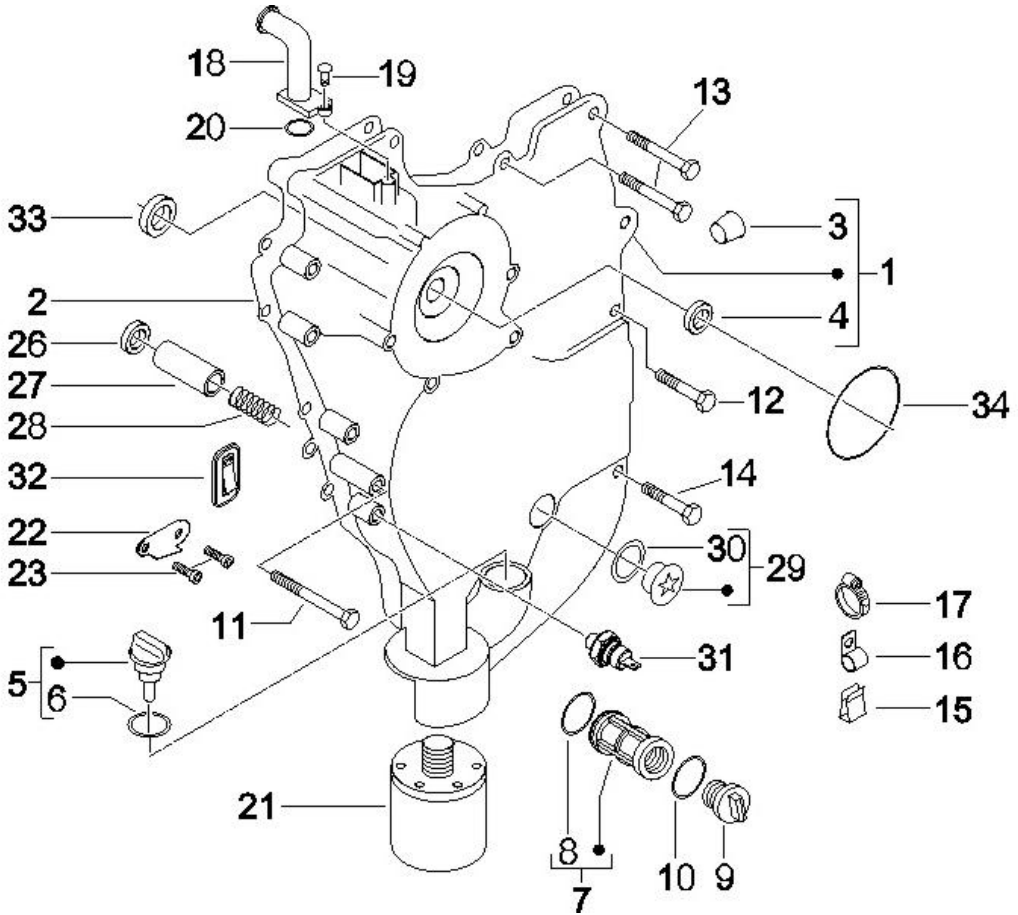

E15. Oil Filter

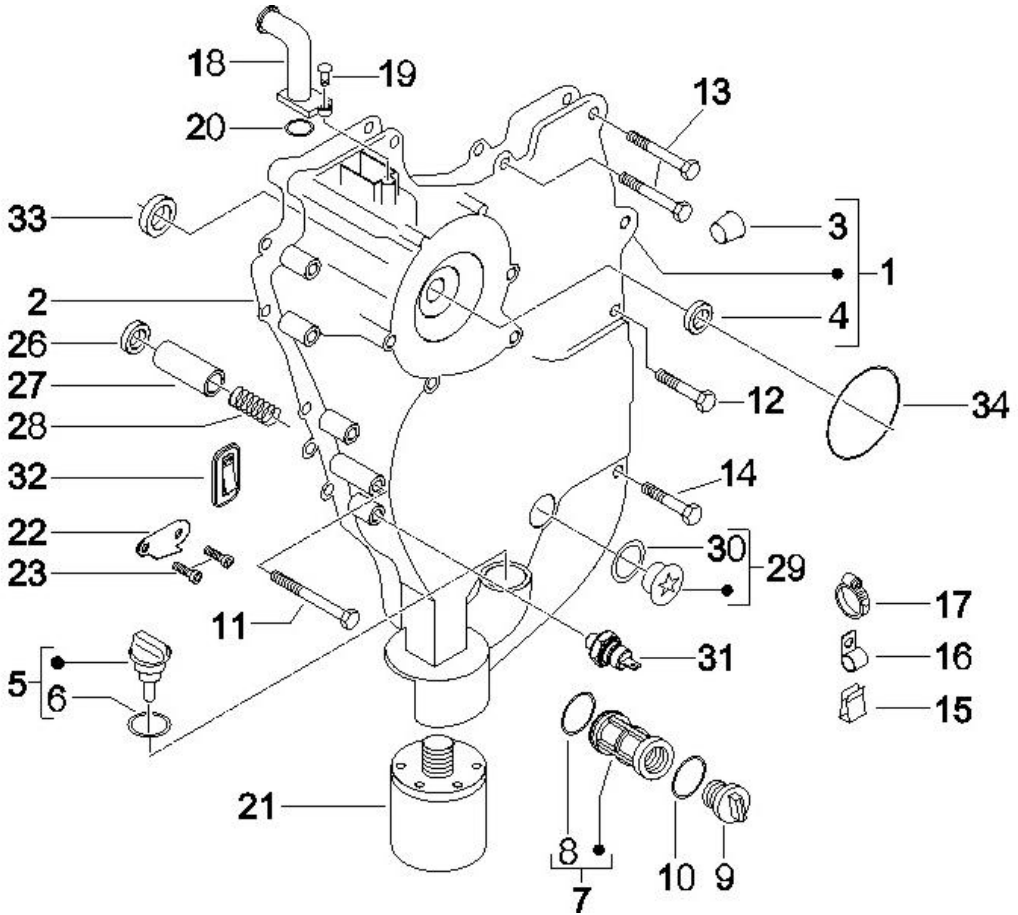

E16. Reduction Gear

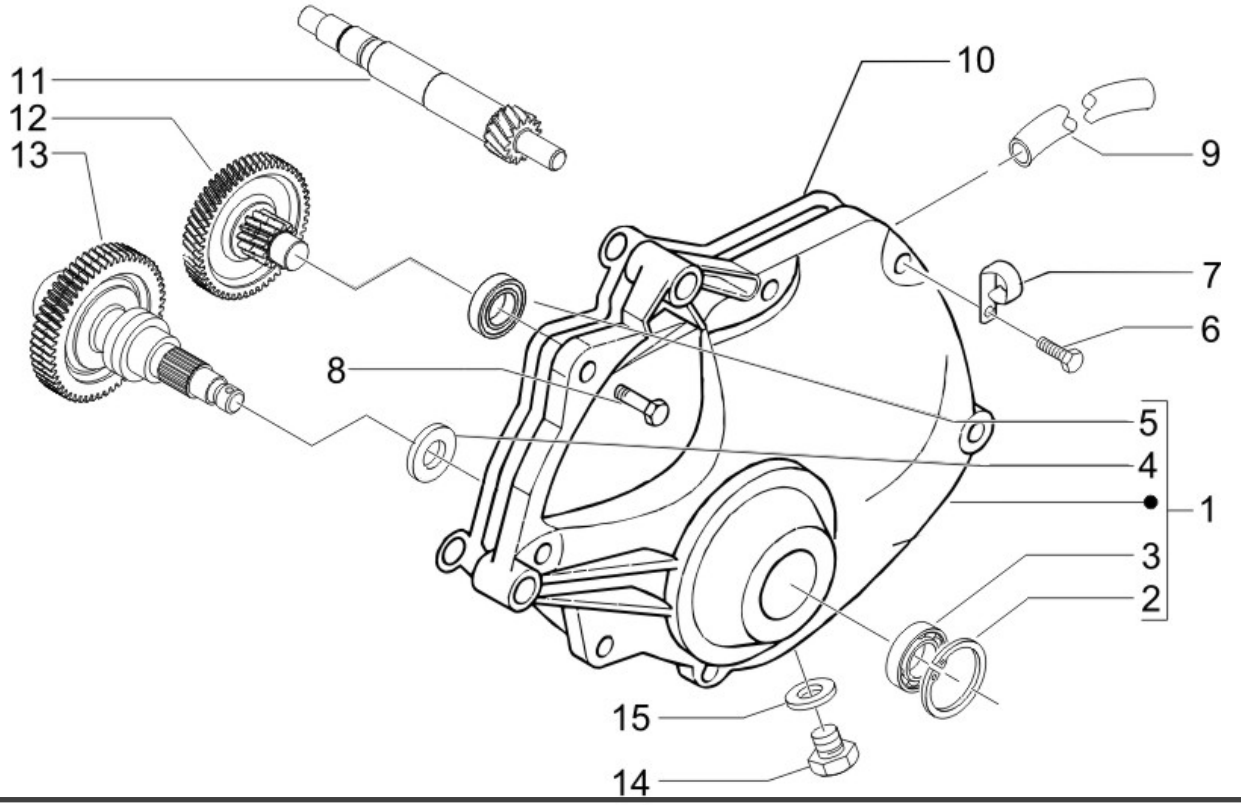

E17. Throttle Body

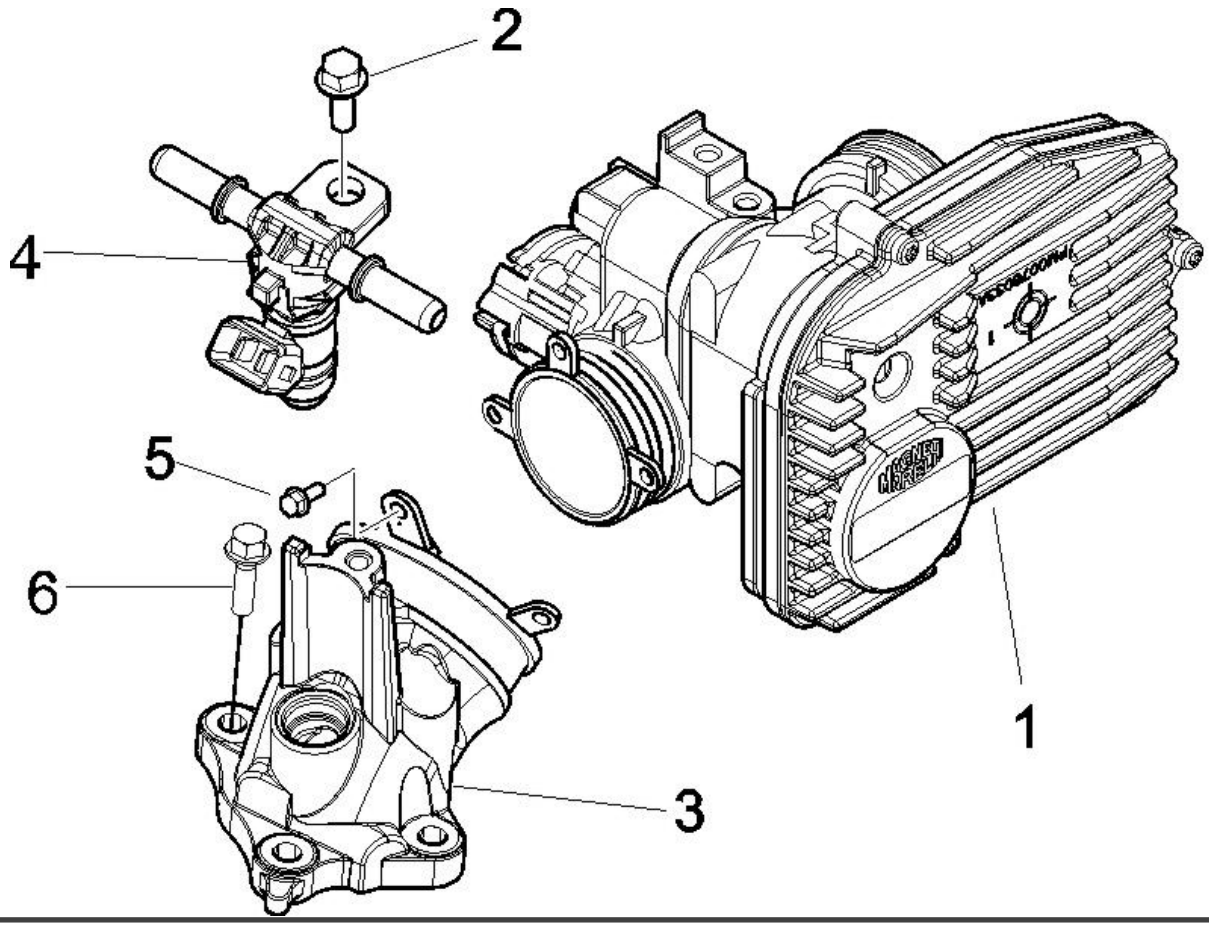

E18. Air Cleaner assy.

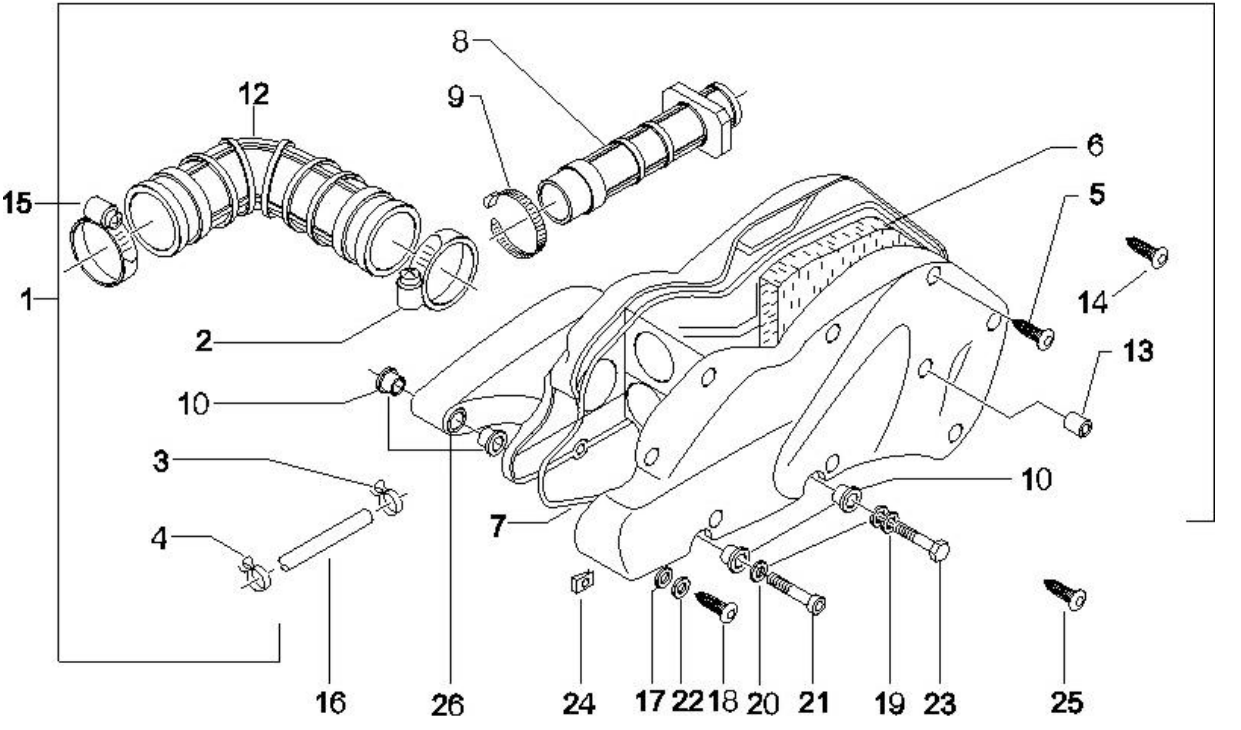

F1. SOLENDID VALVE ASSY.

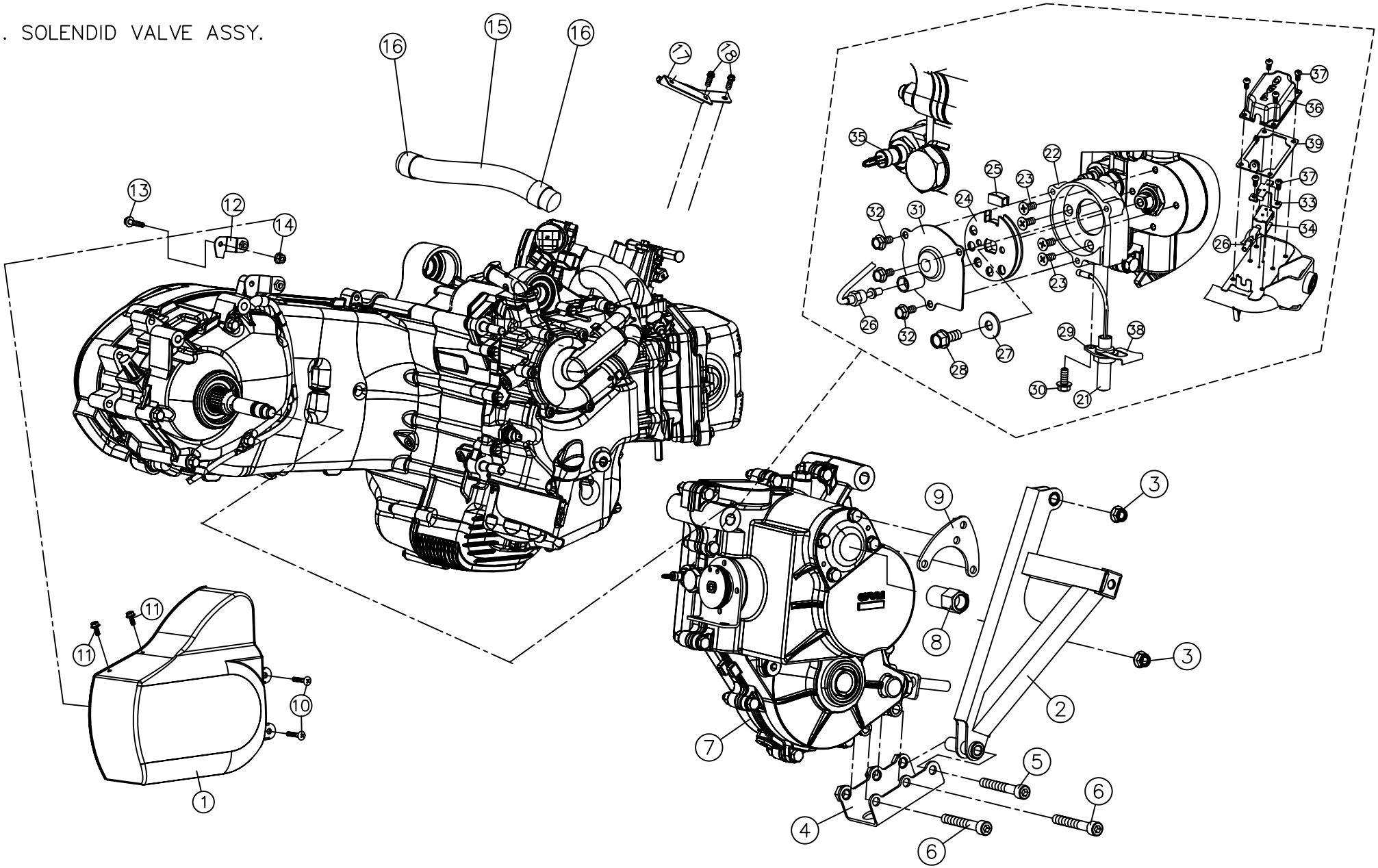

F1. SOLENDID VALVE ASSY.

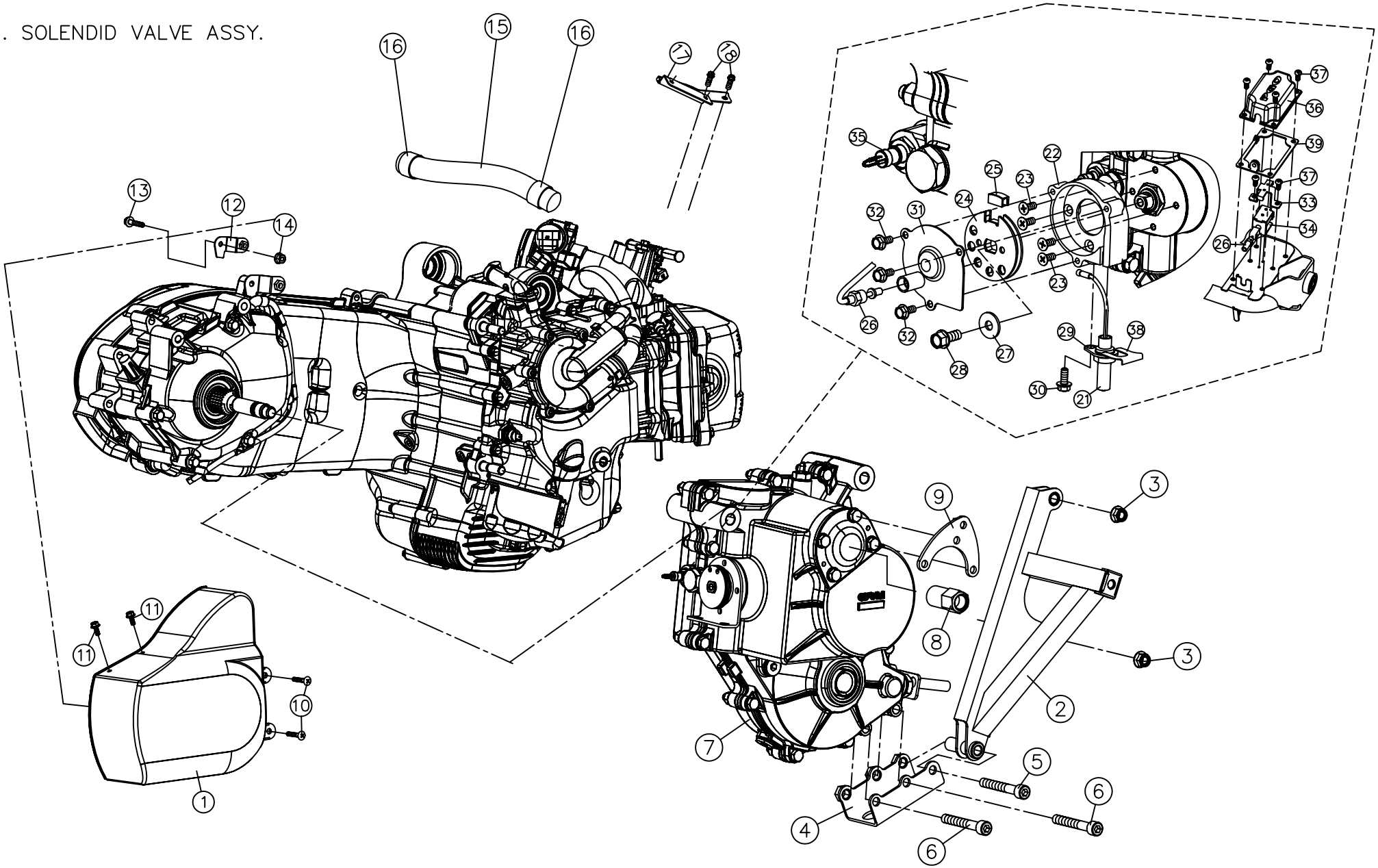

F2. ENGINE HANGER/ MUFFLER

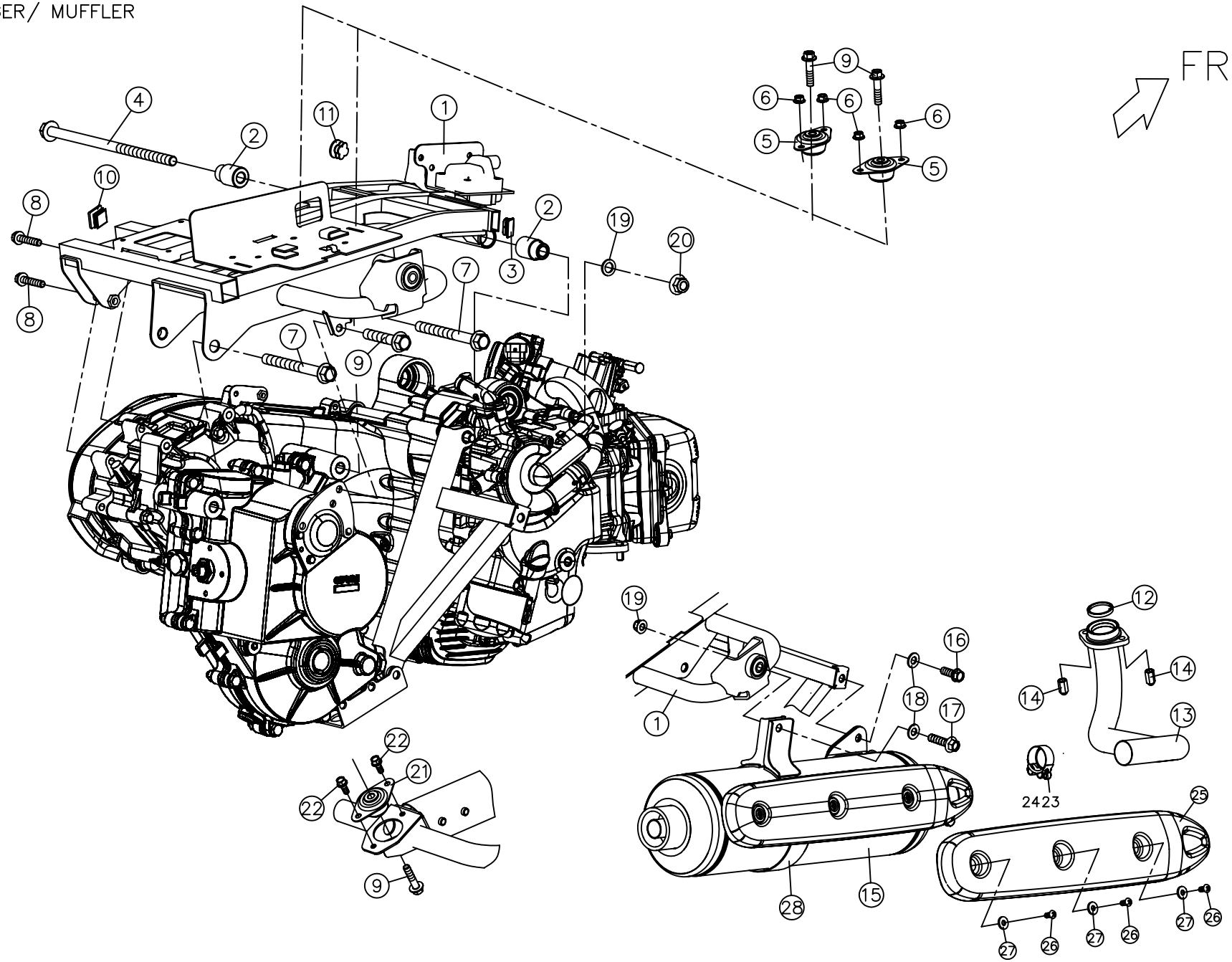

F3. PLASTIC COVERS

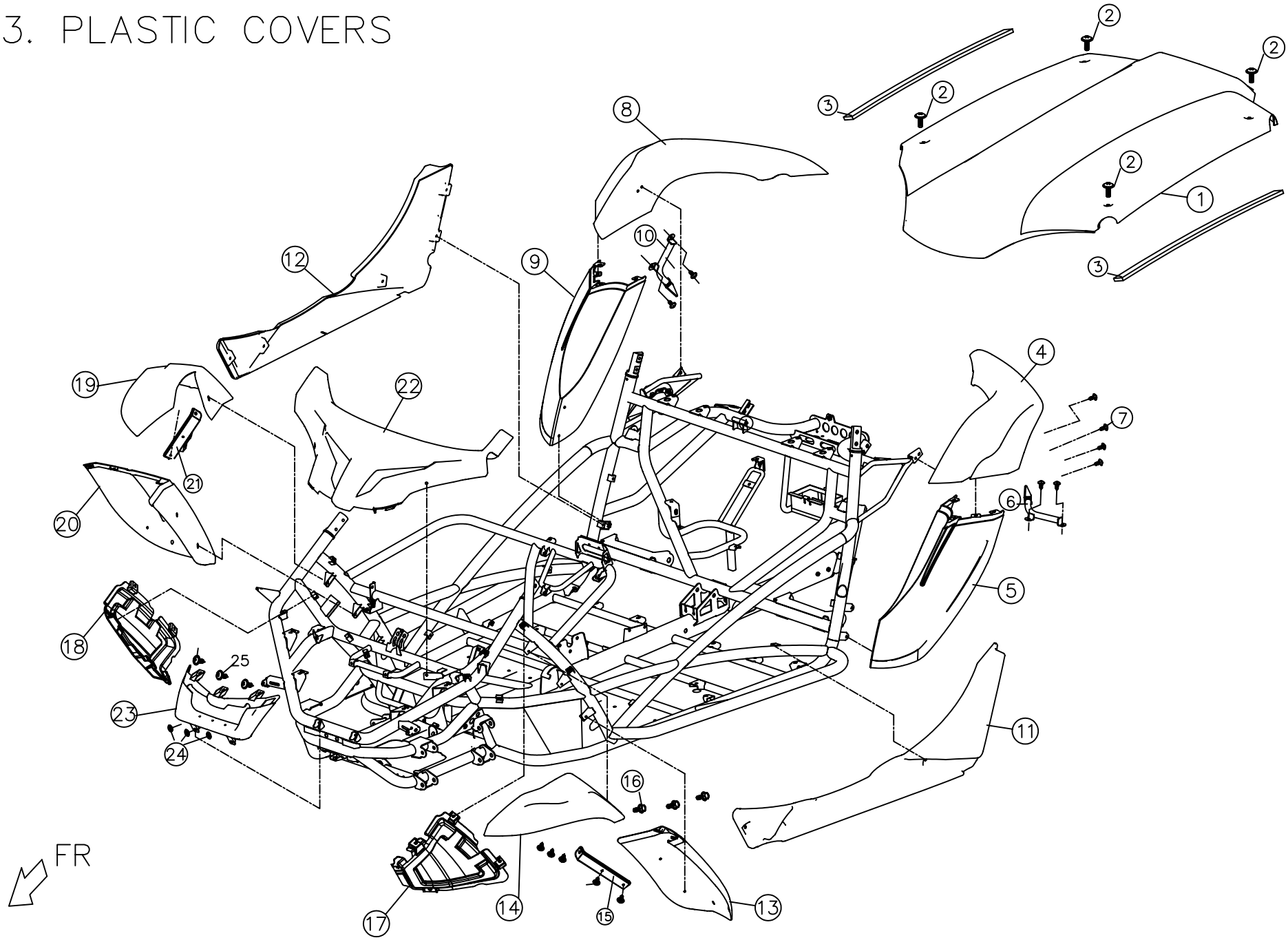

F3. PLASTIC COVERS

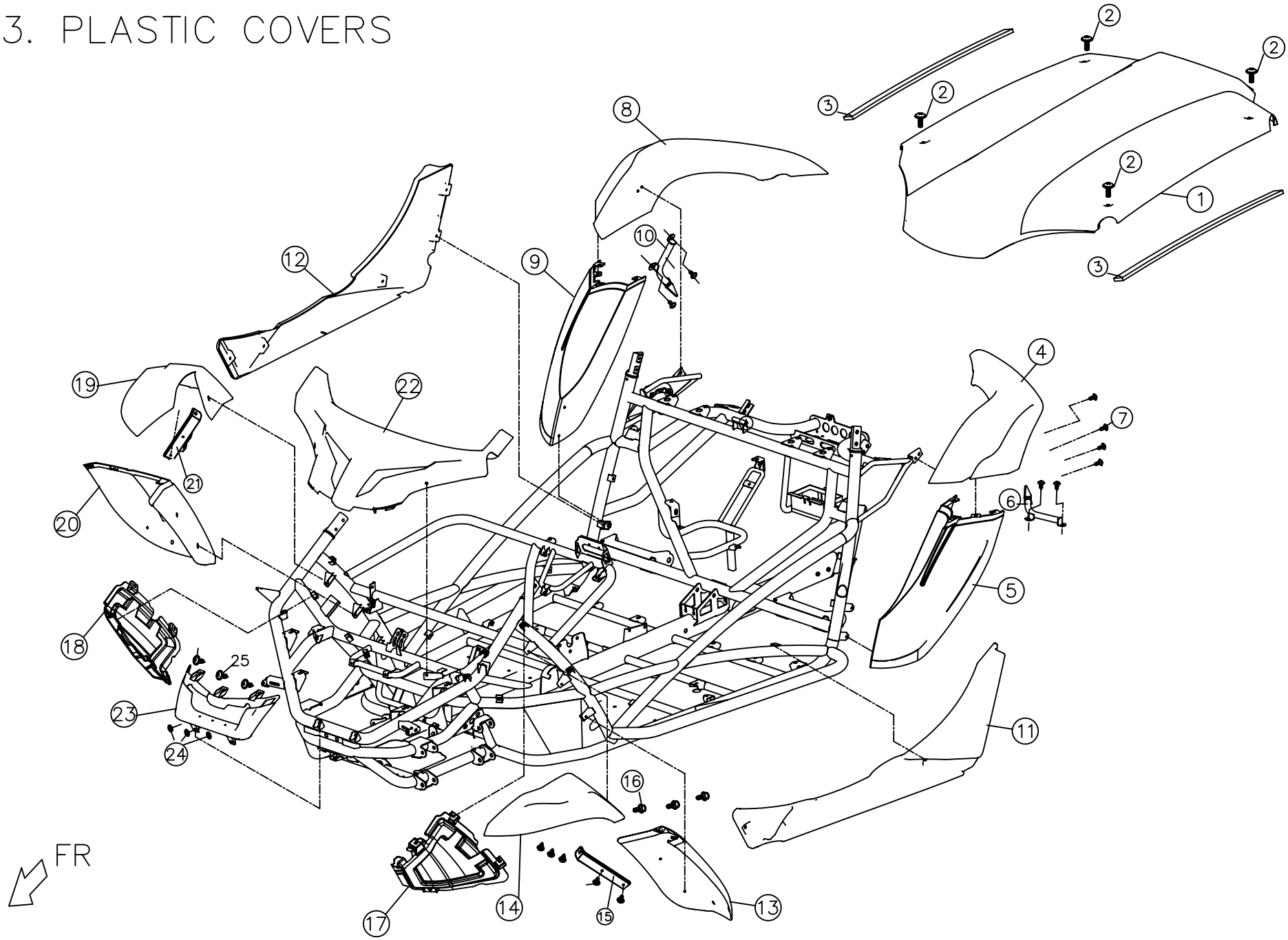

F4. FRAMES

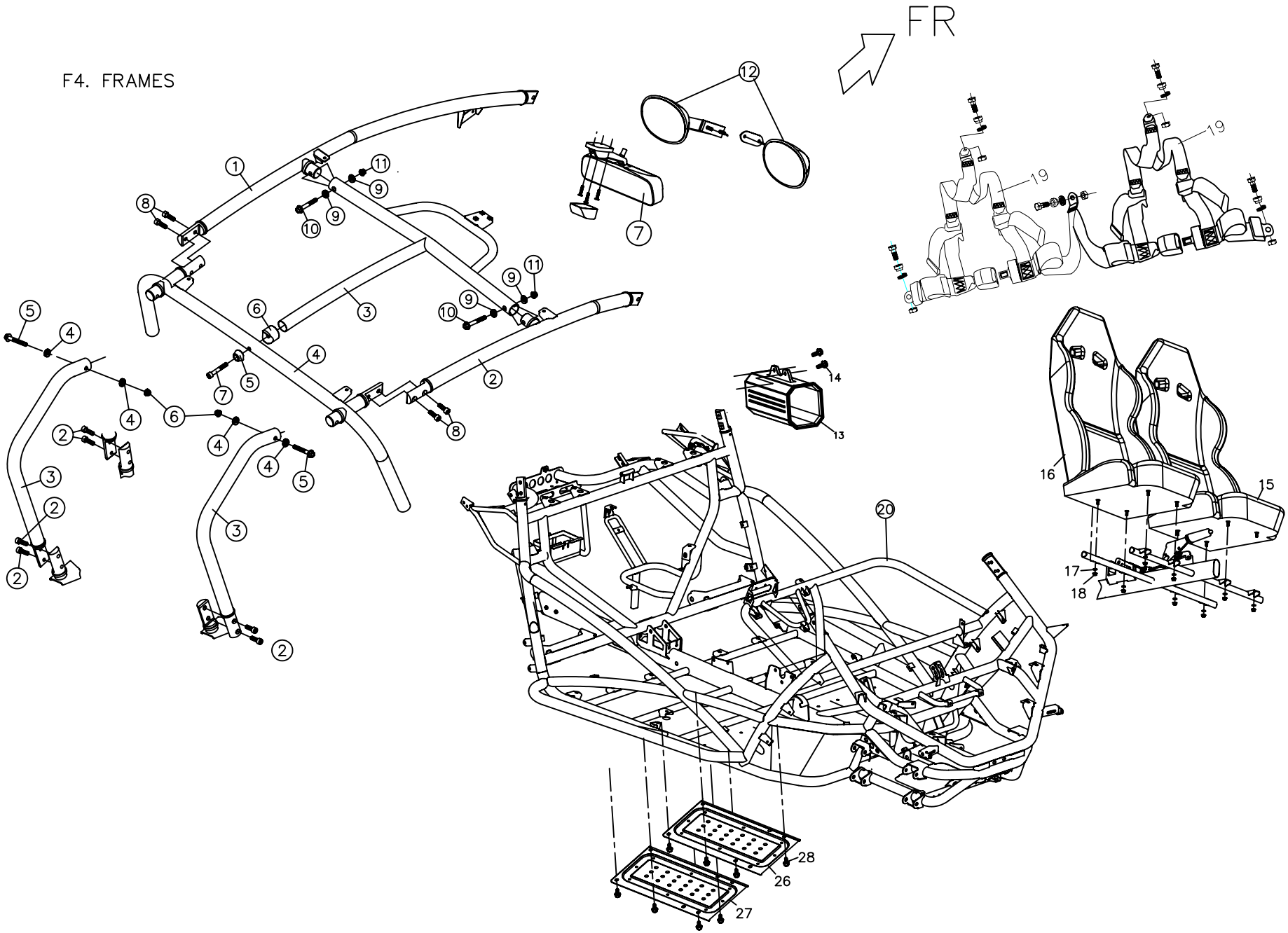

F5. WHEELS

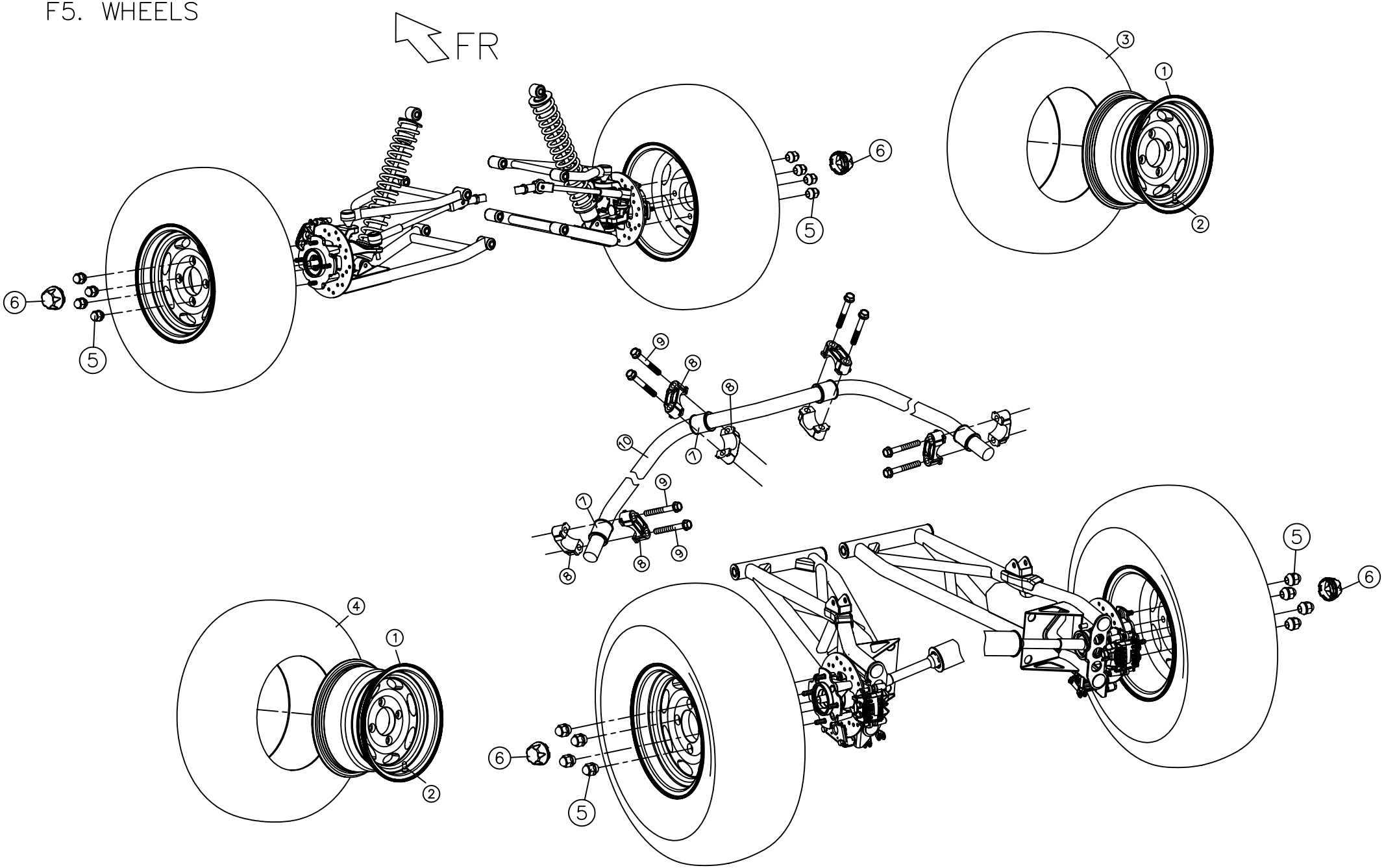

F6. CONTROL CABLES

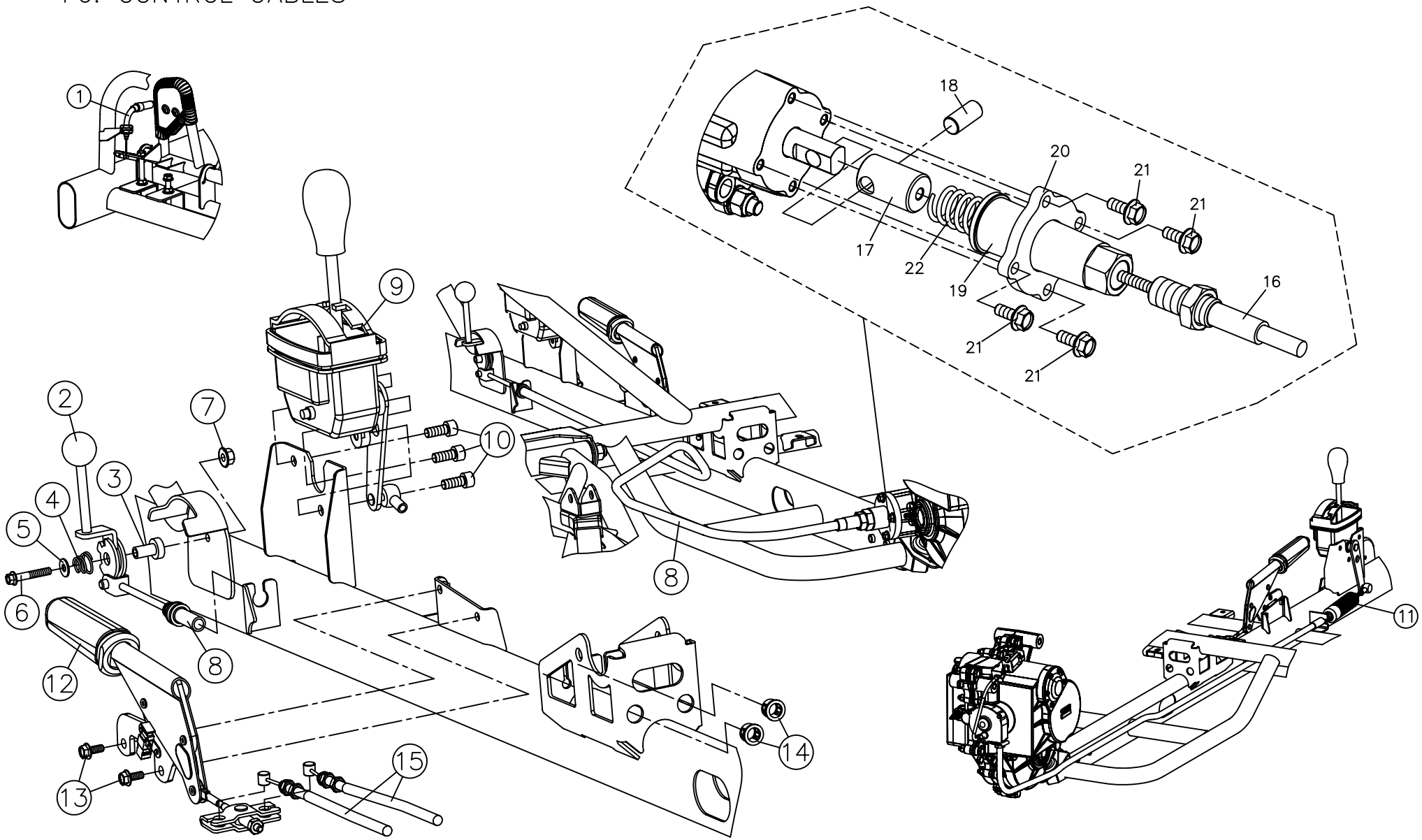

F7. BRAKE SYSTEM

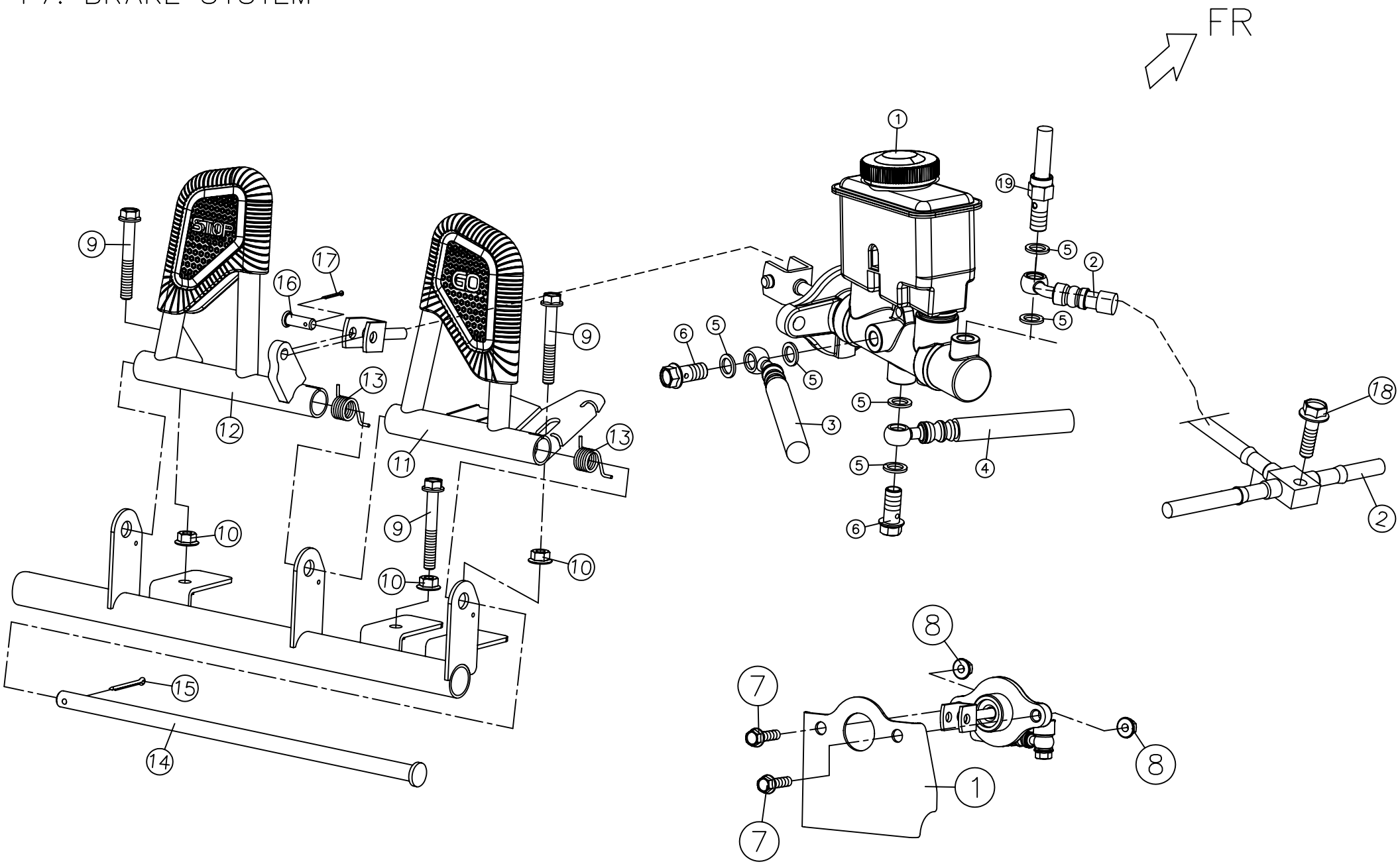

F8. STEERING MECHANISM

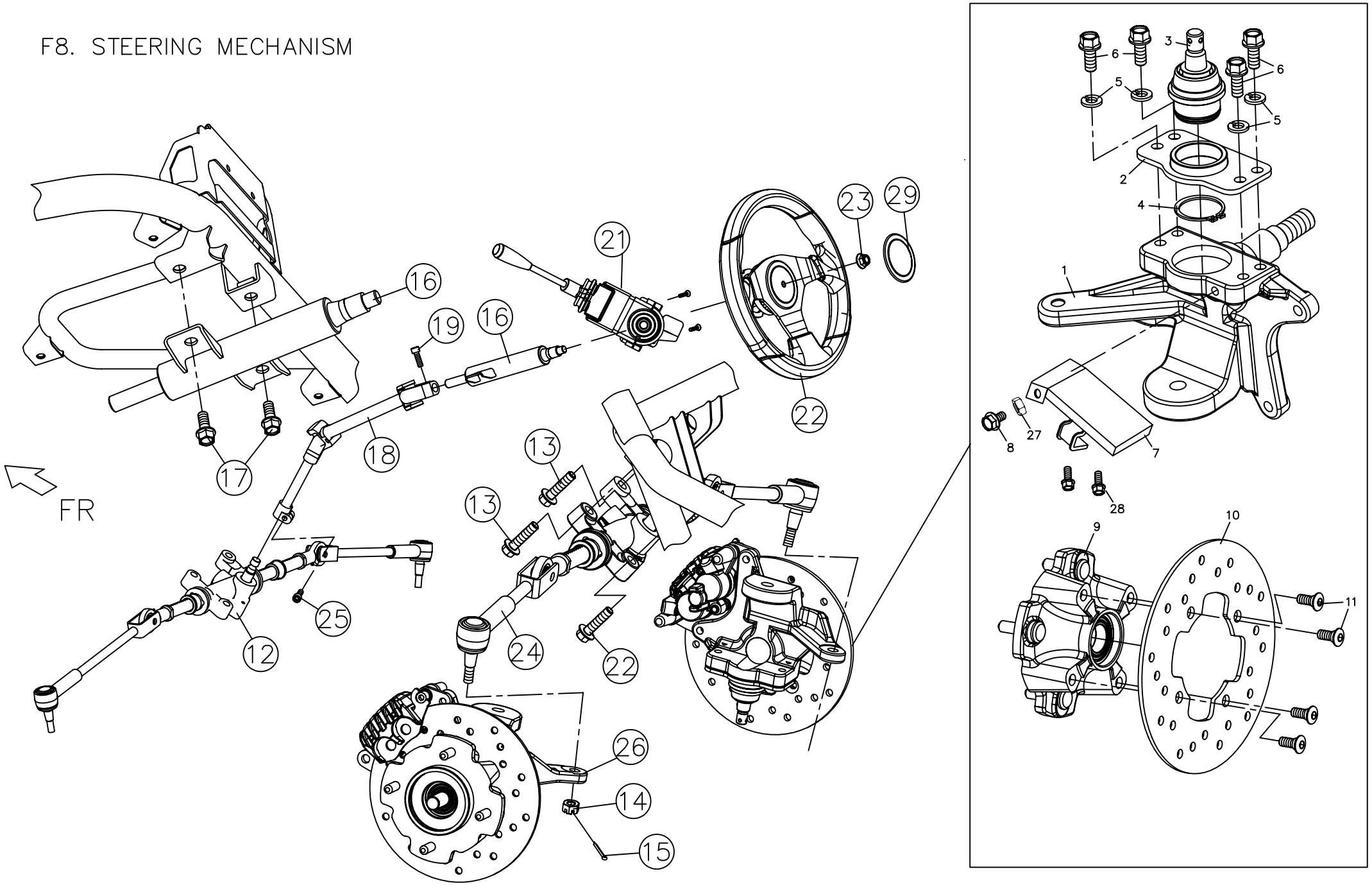

F9. SWING A ARMS

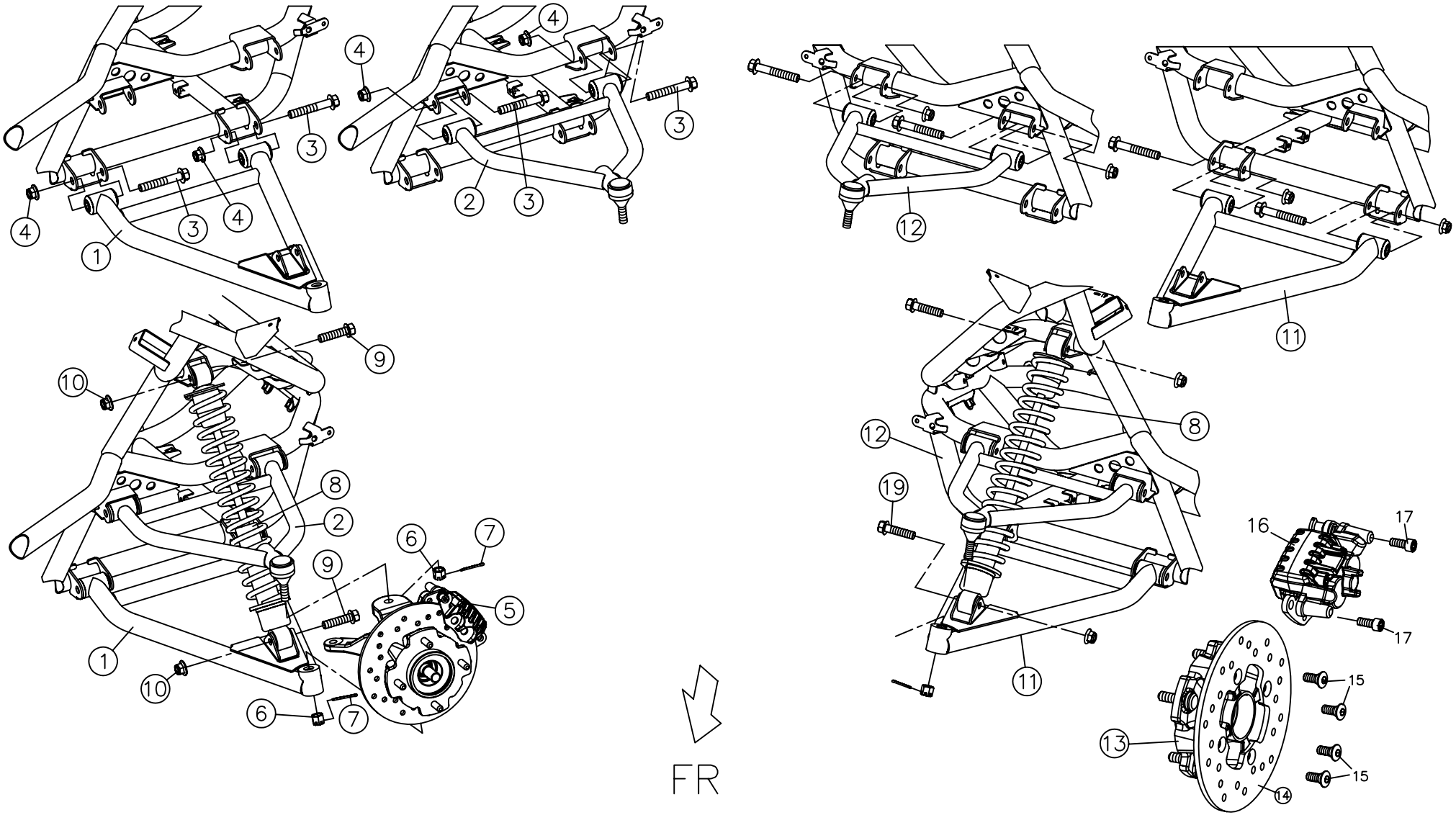

F10. DRIVING SHAFT, ABSORBER

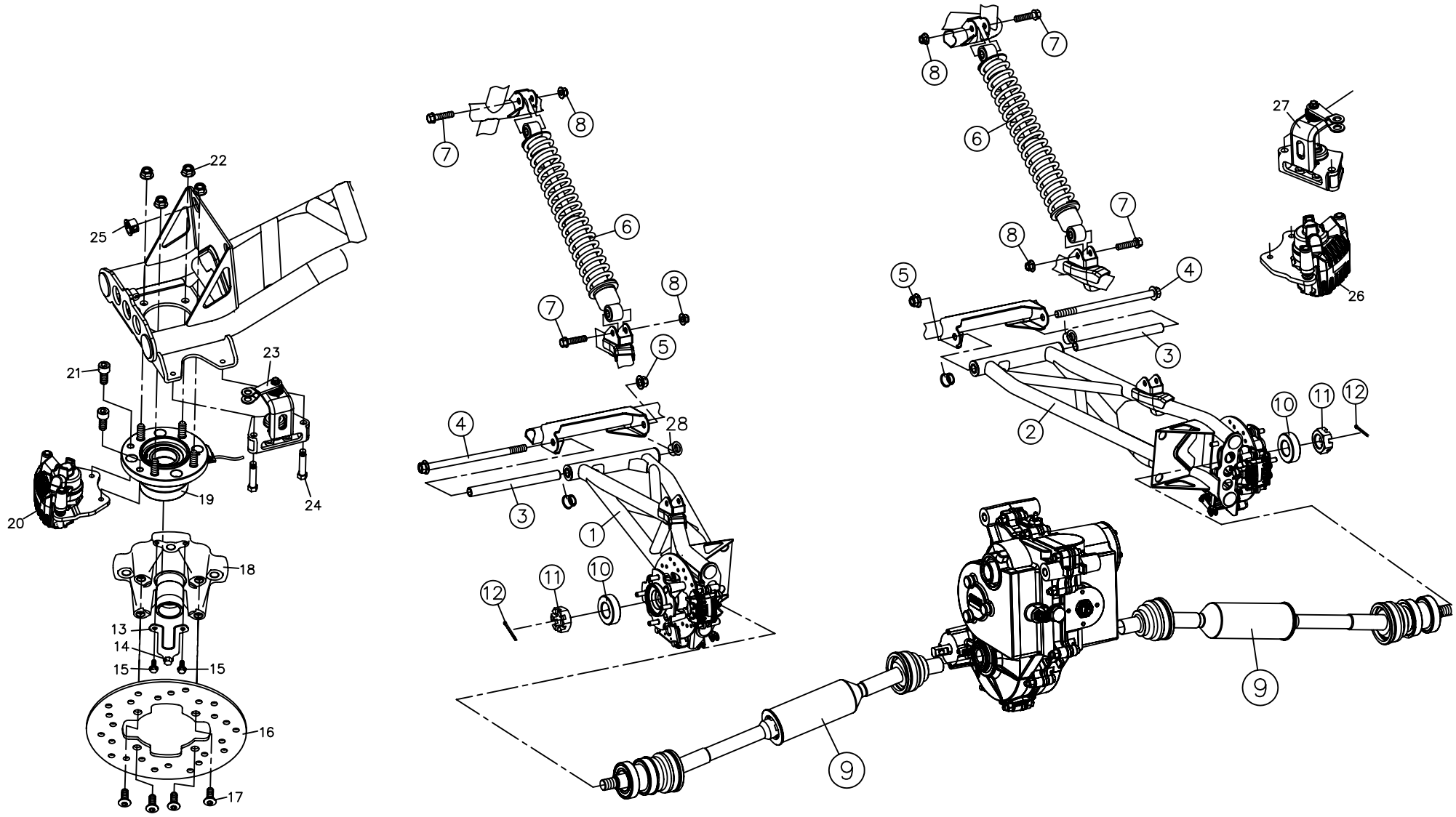

F10. DRIVING SHAFT, ABSORBER

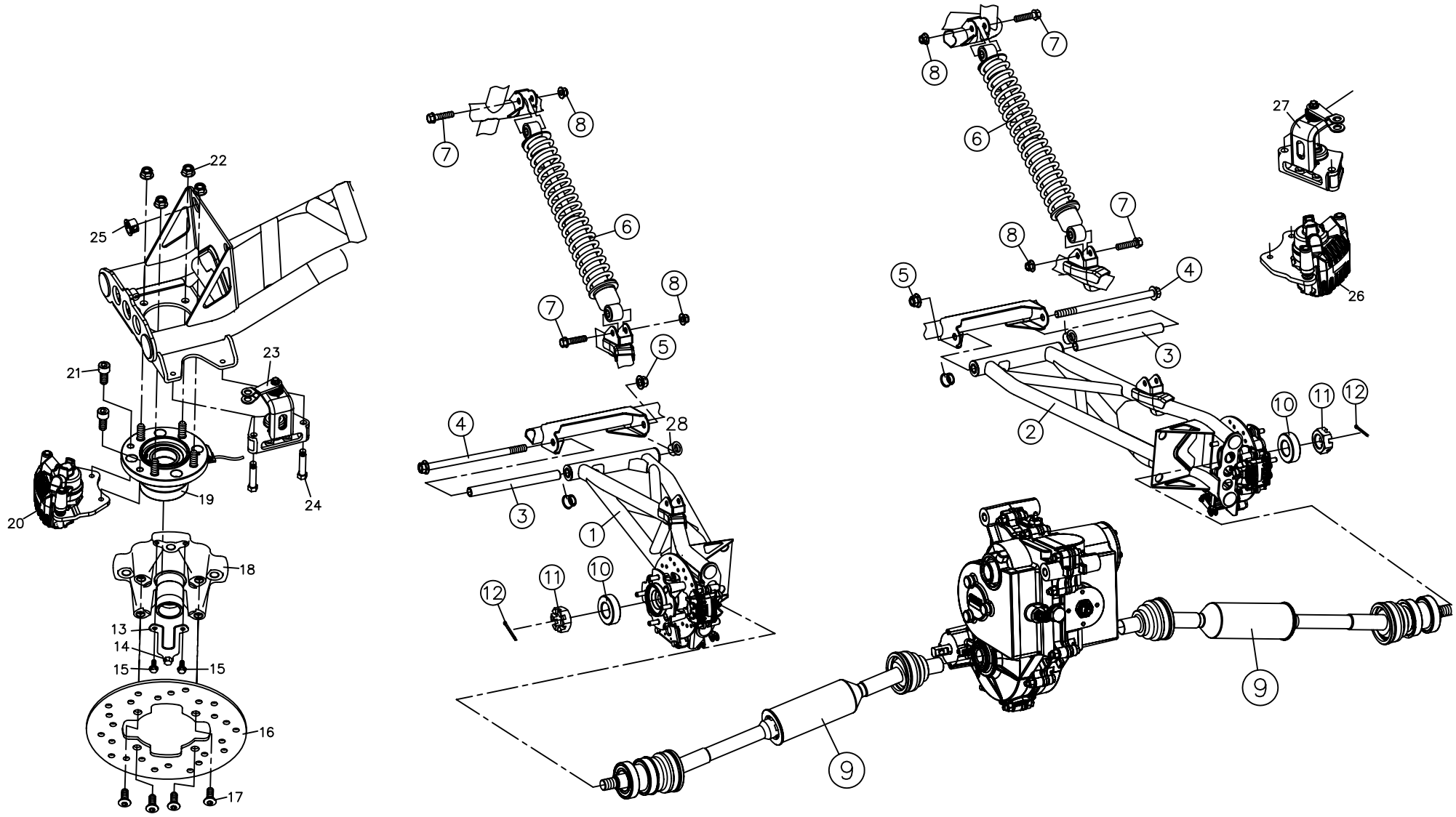

F11. REAR RACK

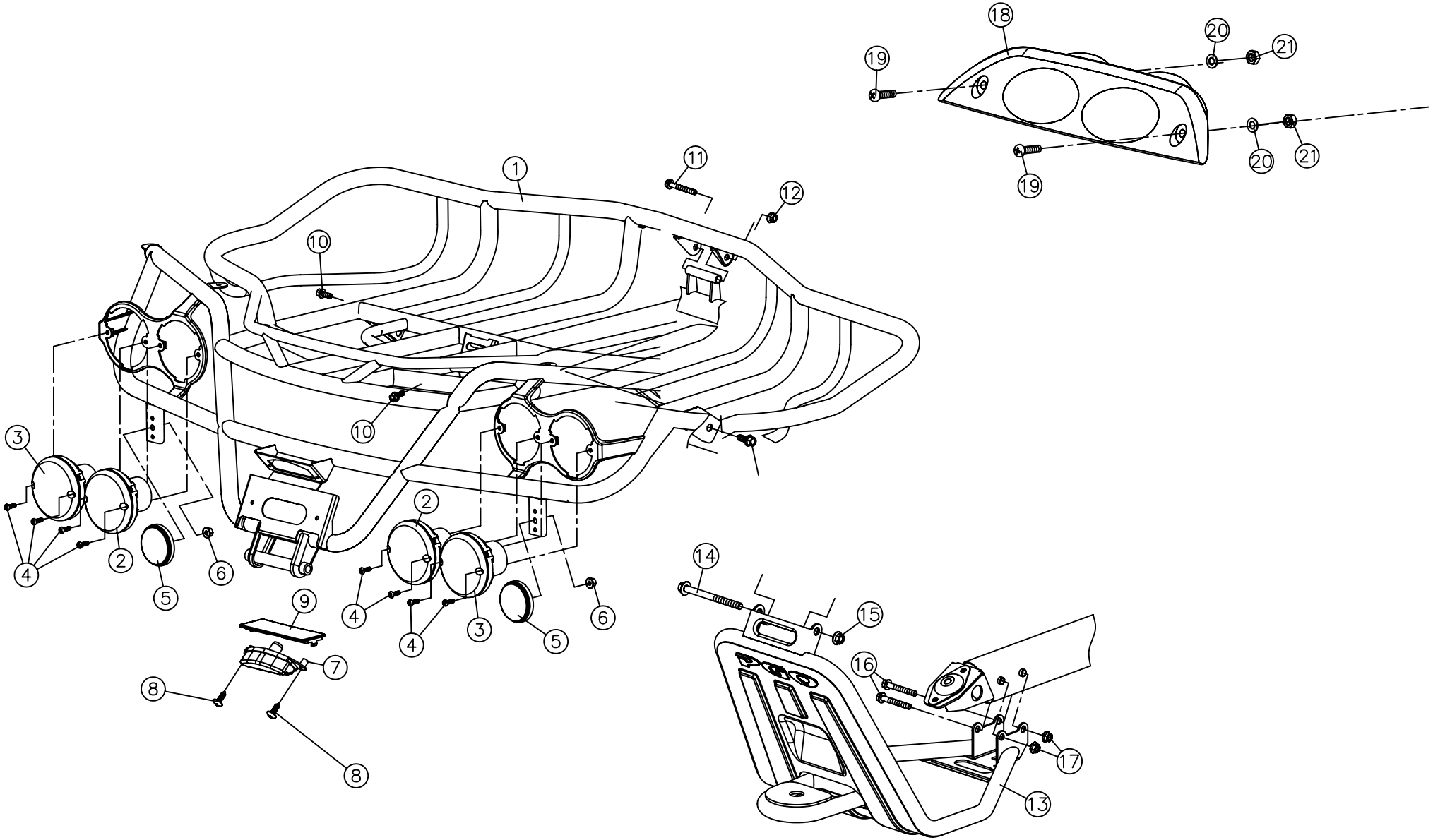

F12. FRONT BUMPER, HEAD LAMP

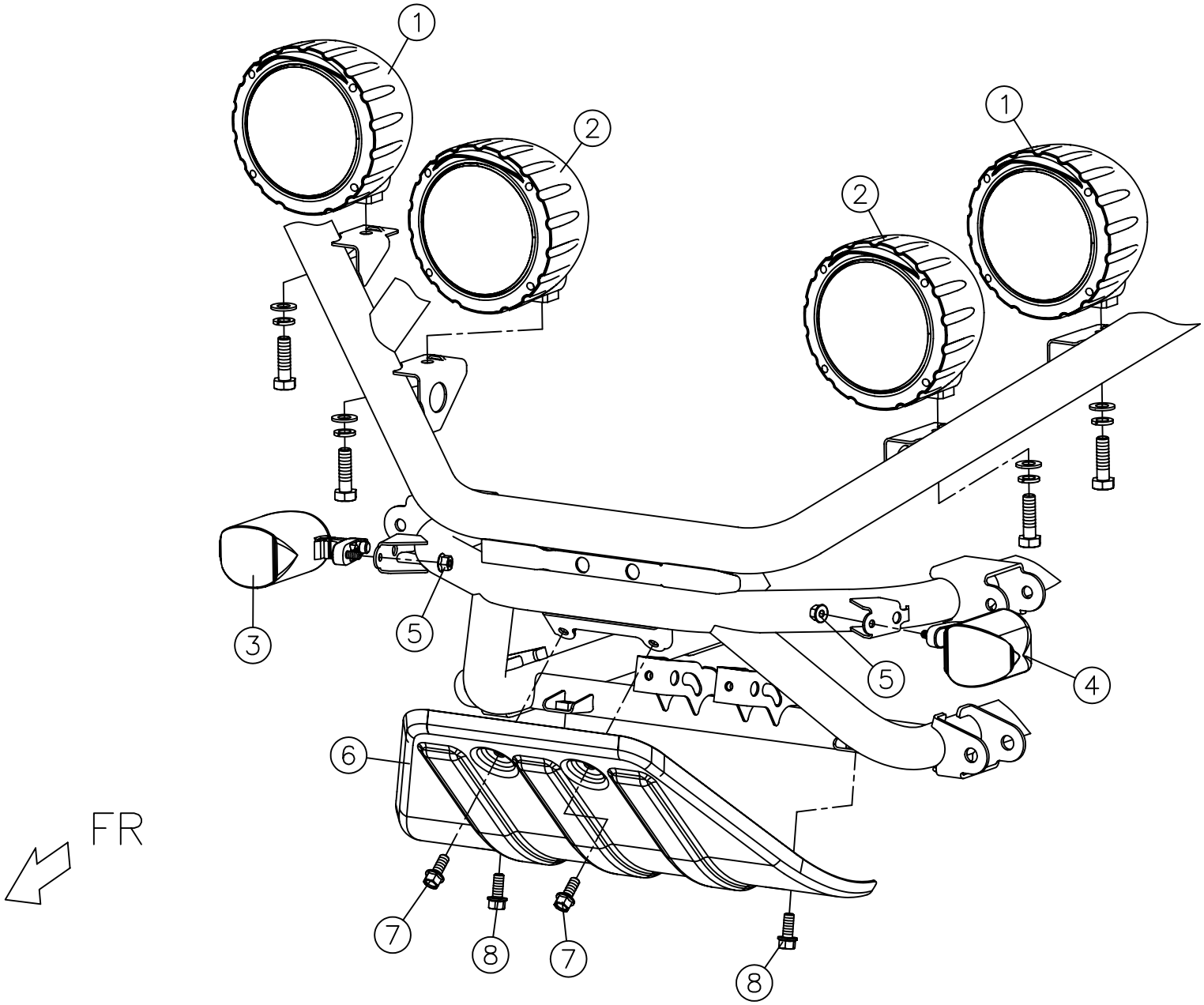

F13. FUEL TANK, PUMP

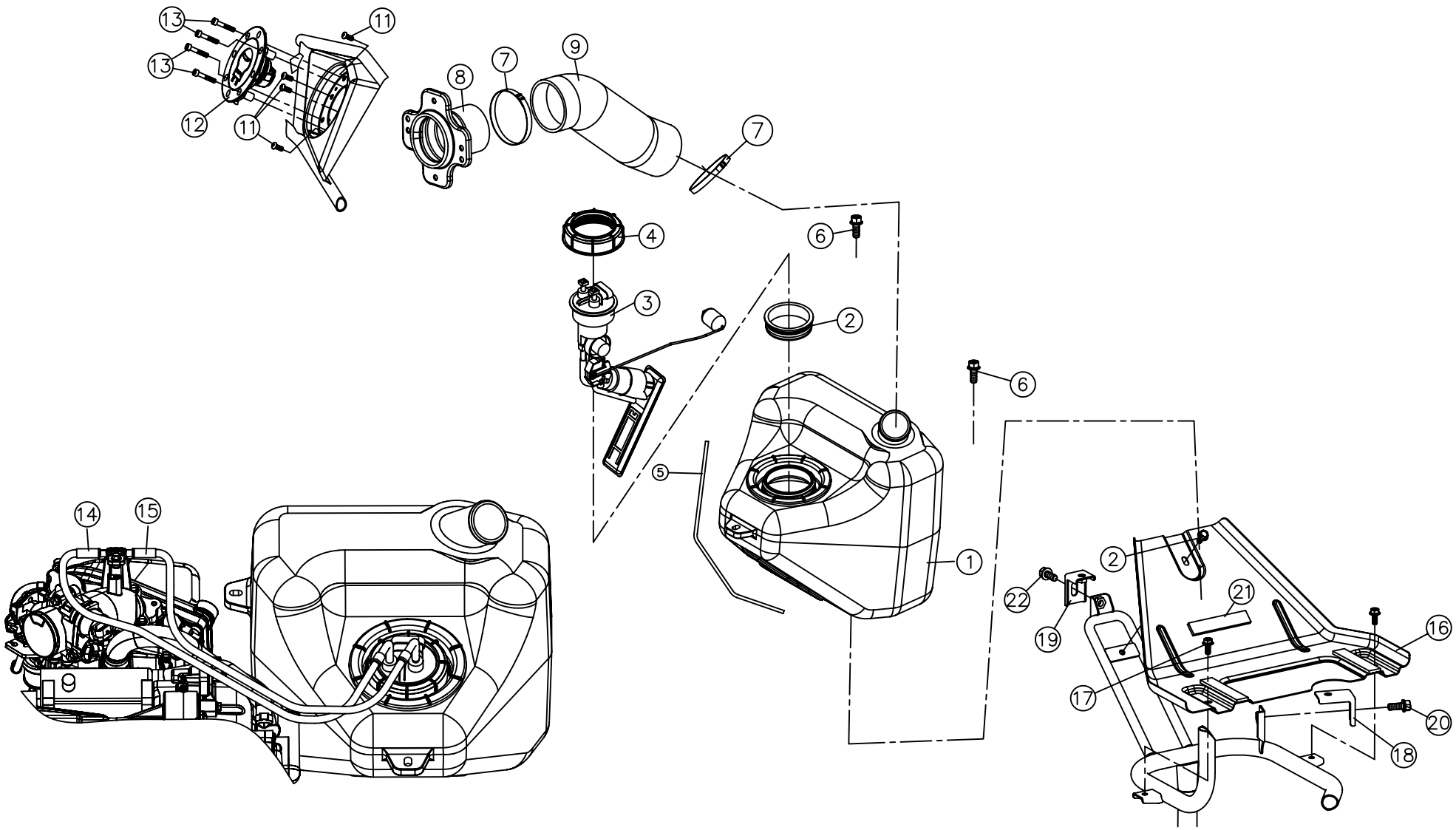

F14. DASHBOARD , COVER

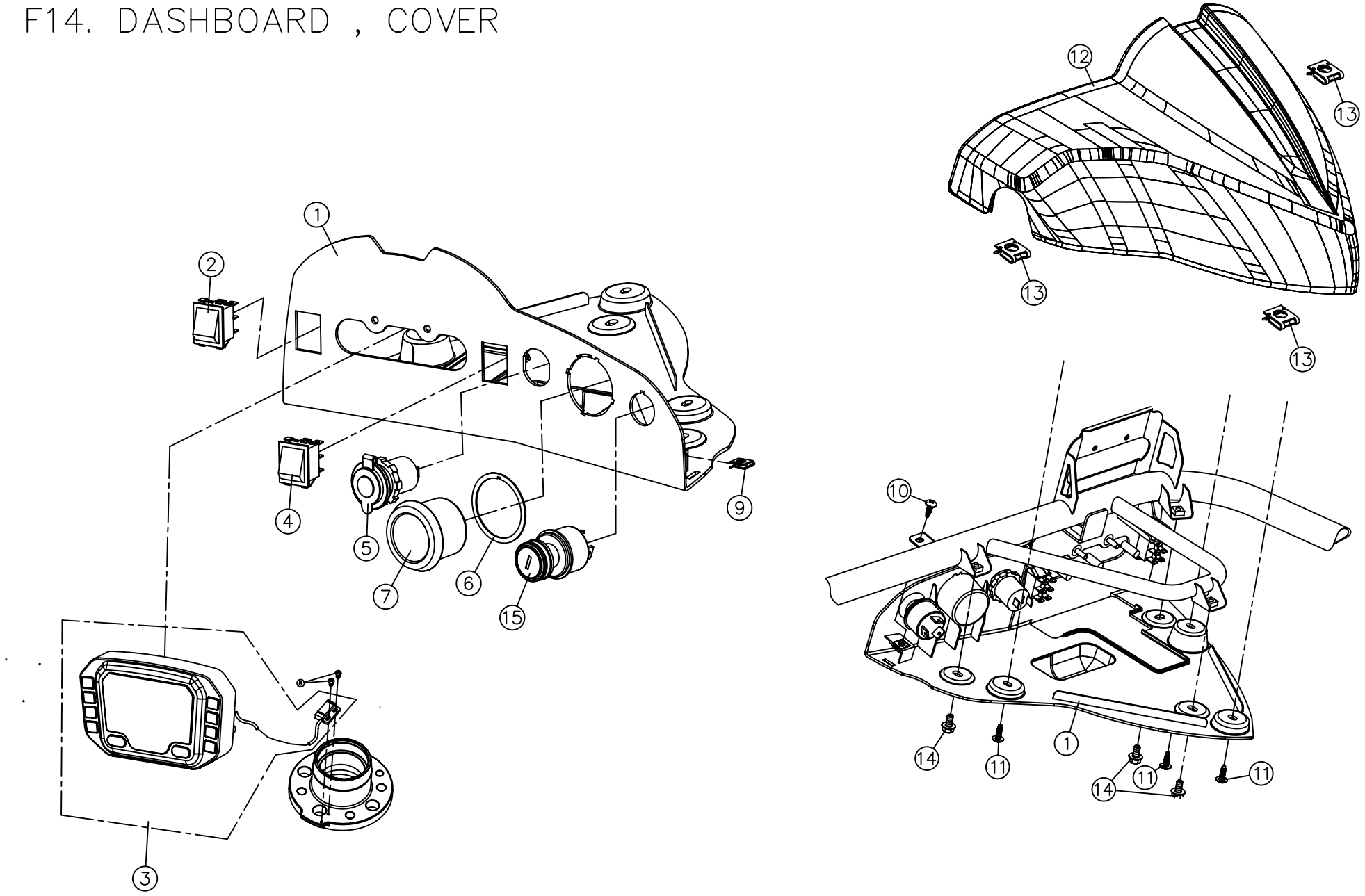

F15. COOLING SYSTEM

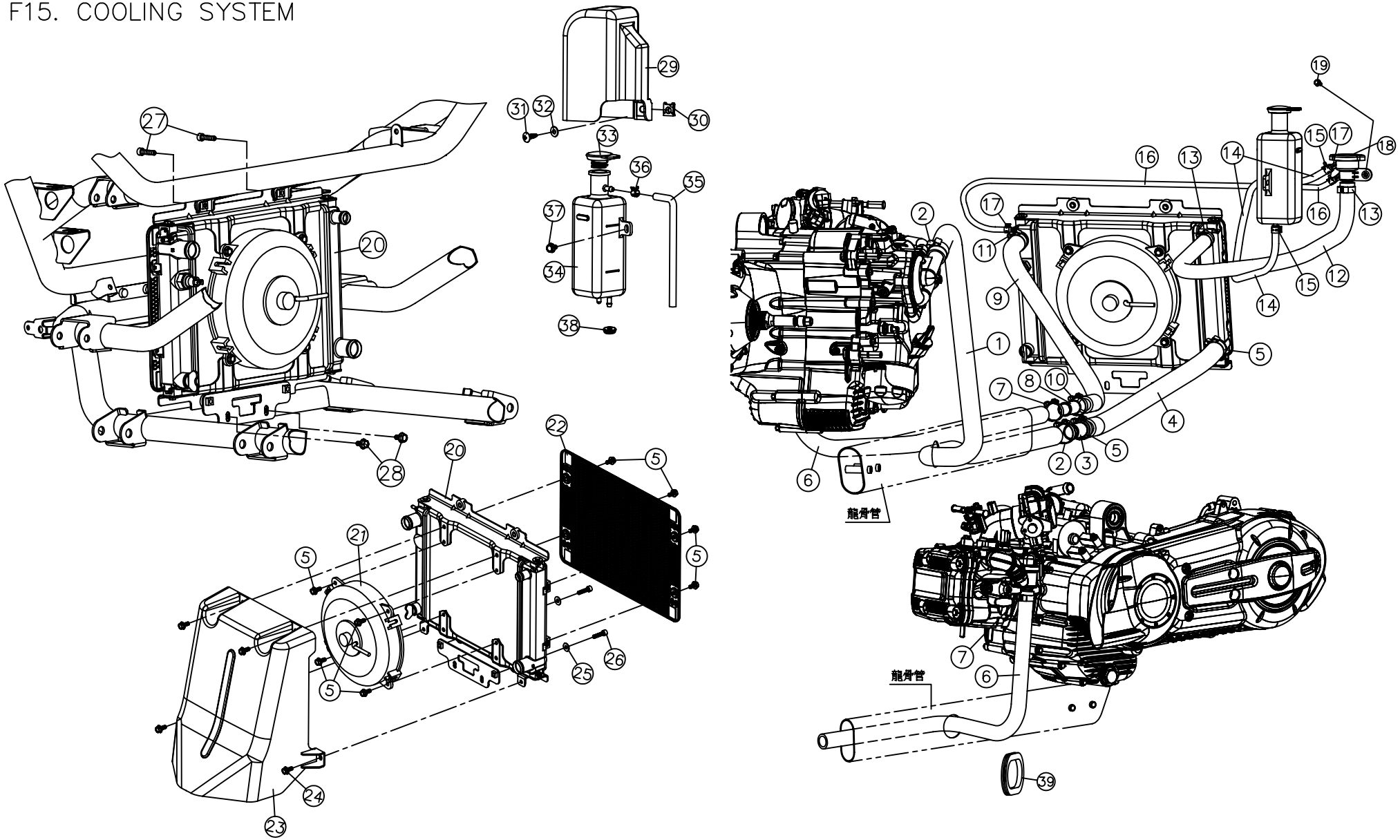

F15. COOLING SYSTEM

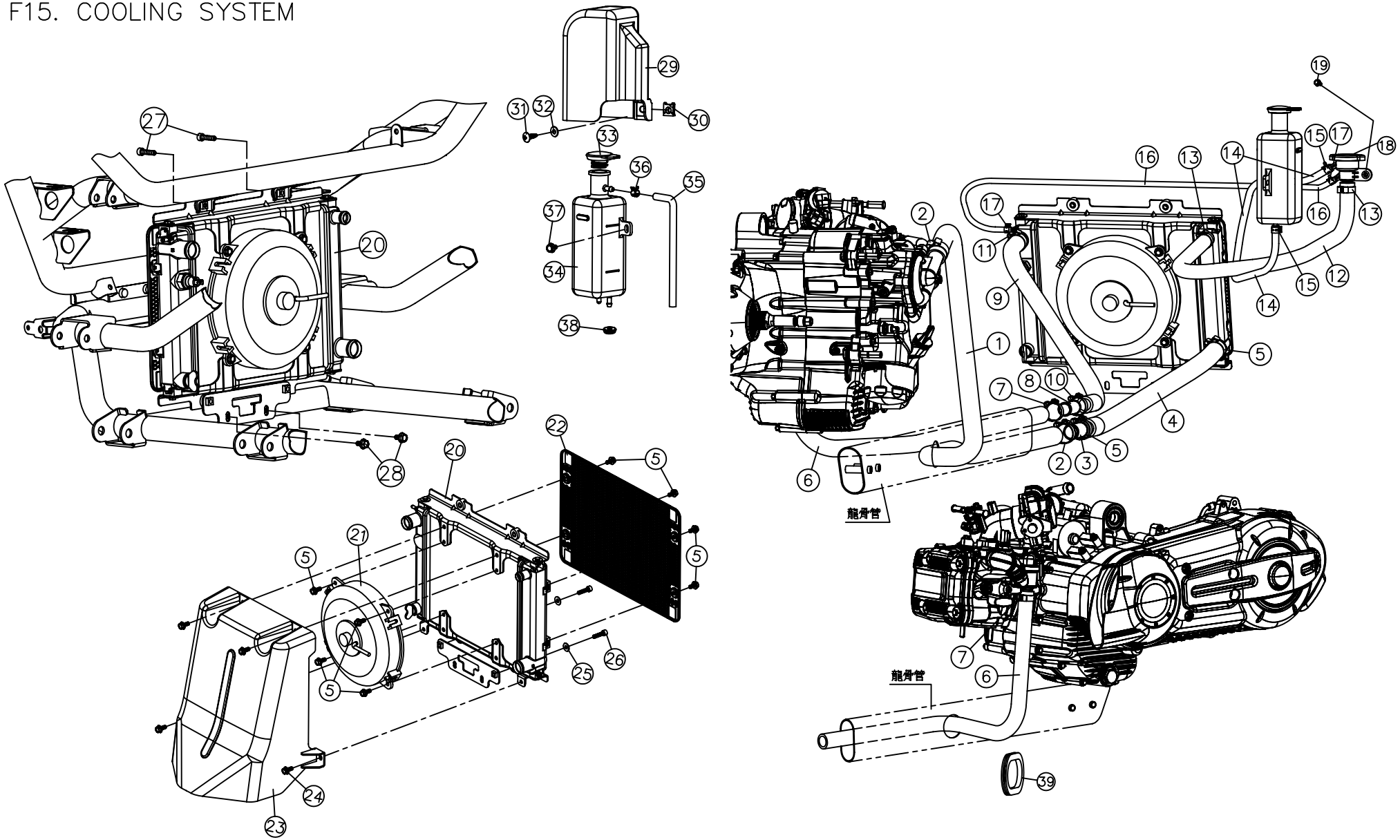

F16. ELECTRIC PARTS

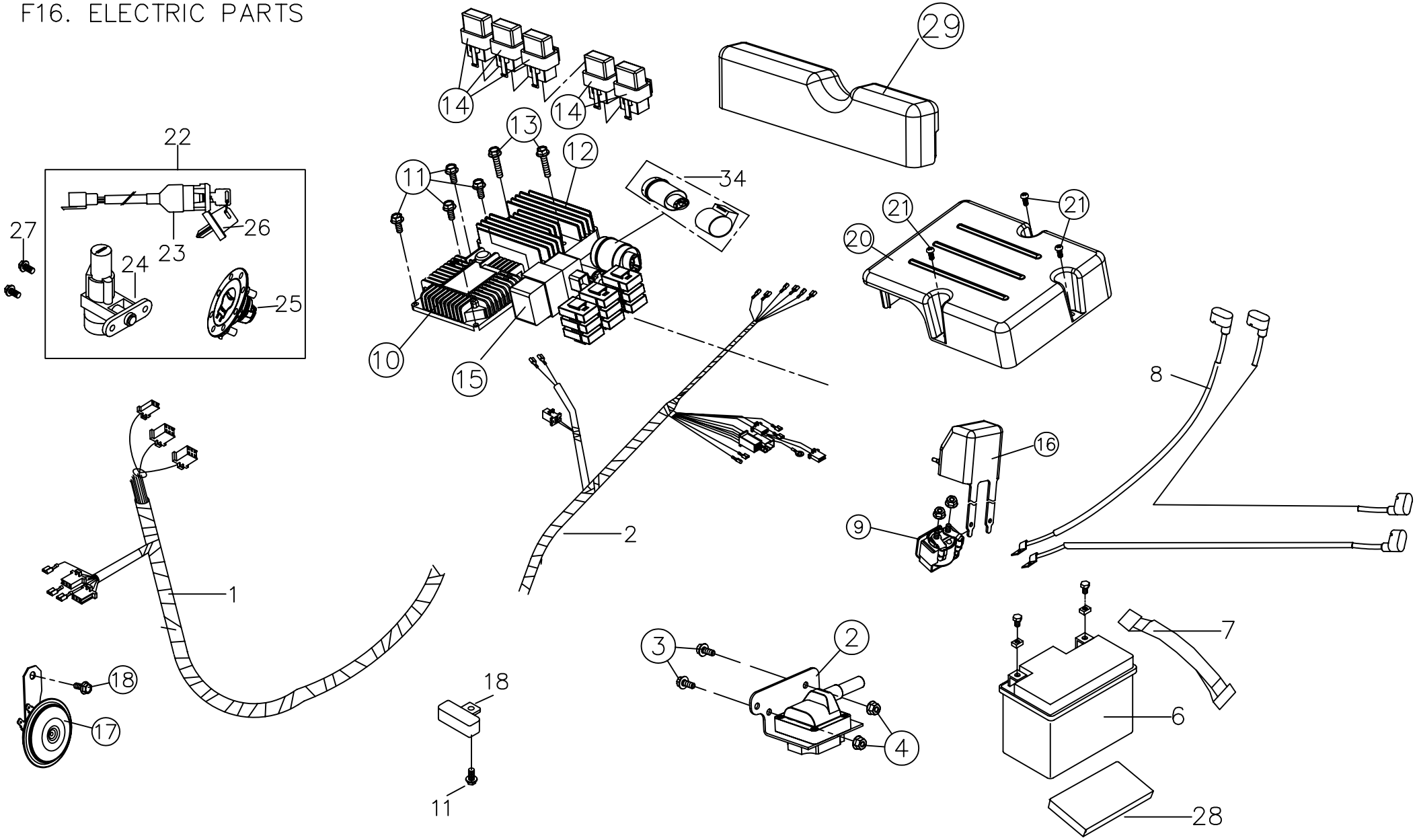

BR-500 LABELS

B86010200000

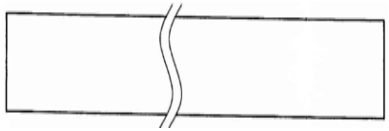

B8601060000

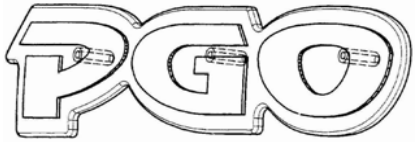

B86010100000

B8601030000

B86030500000

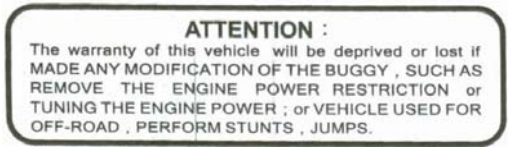

B86030400000

B86010400000

B86010500000

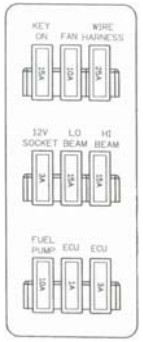

B86010700000

P1603040000

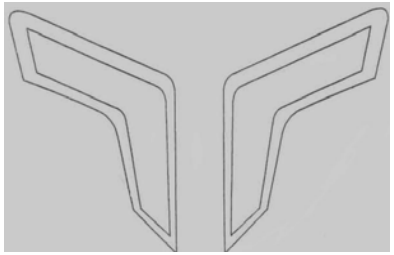

B86010900000

B86030100000

B86030200000

B86030300000

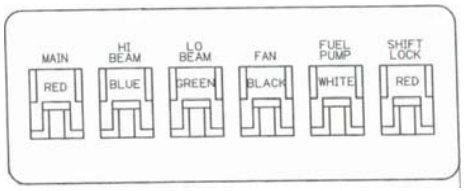

B86010800000

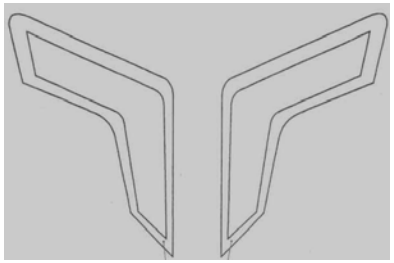

B8601100000

E1.	ENGINE COMPLETE				
Figure	Item	Part No.	Q'ty	Part Name	Remarks
E1	1	CM1130095	1	engine	
E1	2	497091	1	complete gasket set and oil seals	
E1	3	497090	1	thermic gasket set and oil seals	

E2.	CRANKCASE				
Figure	Item	Part No.	Q'ty	Part Name	Remarks
E2	1	CM1502025002	1	crankcase assy-cm1145215002 u	
E2	1	CM1502025003	1	crankcase assy-class 3×9 500 u	
E2	1	CM1145175004	1	catergory 4 crankcase 4	
E2	1	CM1502025001	1	category 1 crankcase	
E2	1	CM1502025002	1	category 2 crankcase	
E2	2	000674	1	ring for rear wheel axle (25×26.9×1.2)	
E2	3	006647	1	ring for rear wheel axle (47×50.5×1.75)	
E2	4	239388	2	pin x electrical starter motor-d9.5 h15	
E2	5	411311	2	plug	
E2	6	478115	4	pin vespa gt 125/200	
E2	7	484034	1	nozzle	
E2	8	484993	2	dowel	
E2	9	485912	1	bearing	
E2	10	825233	1	ball bearing	
E2	11	825238	1	o-ring	
E2	12	82656R	2	mag side ball bearing 20×42×12	
E2	13	82668R	2	ball bearing for engine case 17×47×14	
E2	14	827951	4	cylinder stud	
E2	15	829195	1	pulley side seal	
E2	17	833513	2	sidecase studs	
E2	18	833701	1	bearing runner 180 m.02	
E2	19	828114	1	0.4 gasket for case	
E2	20	828909	14	bolt for secring sidecase m6-6g×65 t.fla	
E2	21	832130	1	plastic oil dipstick et4 125/mc3 m.02	
E2	22	827085	1	packing	
E2	23	825649	1	nozzle for engine sidecase	
E2	24	564629	1	clamp	
E2	25	834911	1	bracket	

E3.	CRANKSHAFT				
Figure	Item	Part No.	Q'ty	Part Name	Remarks
E3	1	8454815001	1	crankshaft category 1x9 500	
E3	4	000267	1	woodruff key for flywheel	
E3	5	021214	1	nut	
E3	6	841458	1	spacer	
E3	8	848222	1	race for crankshaft	
E3	9	830012	1	steel shim for crankshaft	
E3	10	830129	4	bolt for secring timing gear m6×25 t.s	

E4.	CYLINDER & PISTON SET				
Figure	Item	Part No.	Q'ty	Part Name	Remarks
E4	1	8328120001	1	fc1 piston assy. x9 500	
E4	1	8328120002	1	fc2 piston assy. x9 500	
E4	1	8328120004	1	fc4 piston assy. x9 500	
E4	1	8328120003	1	fc3 piston assy. x9 500	
E4	3	827706	1	piston scraper ring	
E4	4	827707	1	piston scraper ring	
E4	5	827820	1	wristpin for piston	
E4	6	828116	2	wristpin retaining clip	
E4	7	832770	1	piston ring	
E4	8	830275	1	complete cylinder assembly w/piston-mst	
E4	9	830375	1	0.8 cylinder base gasket	
E4	9	830277	1	0.4 cylnder base gasket	
E4	9	830276	1	0.6 cylinder base gasket	
E4	10	288245	2	nut for muffler assy. (m=6/h=7)	
E4	11	82650R	1	bracket-.82650r	
E4	12	847928	1	packing	
E4	12	847928	1	packing	
E4	13	434541	2	screw	

E5.	CYLINDER HEAD				
Figure	Item	Part No.	Q'ty	Part Name	Remarks
E5	1	847793	1	cylinder head assy.(bv-500)	
E5	1	847793	1	cylinder head assy.	
E5	2	285846	8	cone half	
E5	3	436438	4	ning sfera u	
E5	4	826103	4	valve spring	
E5	5	826256	4	lower valve cap	
E5	6	828321	2	exhaust valve for cylinder head	
E5	7	828322	2	breather valve for cylinder head	
E5	8	828396	4	uppver valve cap	
E5	9	827018	2	exhaust stud	
E5	10	827953	2	studd for cylinder head	
E5	11	CM001915	2	clamp	
E5	12	434541	1	screw	
E5	13	063435	1	cap for breather	
E5	14	430045	1	screw	
E5	16	6389915	1	x9 500 speedo sensor	
E5	17	828646	1	oil sensor	
E5	18	840826	1	radiator hose	
E5	19	843603	1	clamp for cylinder hood	
E5	20	848140	1	themostat (bv-500)	
E5	21	830008	1	clinder head gasket	
E5	22	830278	3	screw m6×90 t.e.flange	
E5	23	832783	4	nut for securing cylinder head	
E5	24	178790	4	washer	

E6.	CAMSHAFT & ROCKER ARM				
Figure	Item	Part No.	Q'ty	Part Name	Remarks
E6	1	8260285	1	rocker arm assy	
E6	2	827991	2	rocker arm shaft	
E6	3	829198	1	timing gear x9 500	
E6	4	829211	1	encoder for x9	
E6	6	018538	1	screw for camshaft centr. Weights-m5×30	
E6	7	829287	1	bolt for securing decompression bell	
E6	8	829071	1	counter weight	
E6	9	829097	1	bushing for counterweight	
E6	10	829247	1	decompression bell	
E6	11	829252	1	spring for timing shaft	
E6	12	831167	1	plate for cam	
E6	13	8260275	1	upper rocker arm assy.	
E6	14	484819	2	nut	
E6	15	82817R	2	screw	
E6	16	484819	2	nut	
E6	17	82817R	2	screw	

E7.	CYLINDERHAED COVER				
Figure	Item	Part No.	Q'ty	Part Name	Remarks
E7	1	830819	1	cylinder head cover	
E7	2	830248	6	screw	
E7	3	830249	6	buffer	
E7	4	830820	1	cylinder head cover gasket	
E7	5	438073	1	spark plug rg6yc champion-.438073	
E7	5	829981	1	ngk spark plug	

E8.	DRIVING PULLEY				
Figure	Item	Part No.	Q'ty	Part Name	Remarks
E8	1	833291	1	roller container assembly	
E8	2	825381	1	spacer for pulley	
E8	3	830899	8	rollers for pulley	
E8	4	842175	4	shoe for rollers	
E8	5	830901	1	roller cover	
E8	6	834304	1	damping pulley guide	
E8	7	829693	1	bolt for belt stabilizer pulley m8×25 t.	
E8	8	832697	1	half pulley	
E8	9	829205	1	washer 42×18.1×3	
E8	10	829203	1	washer 36×22.05×2	
E8	11	829251	1	spring cup washer	
E8	12	829232	1	nut for secuning front pulley assy.	
E8	13	832738	1	transmission v belt for x9 500 beverly	

E9.	CLUTCH PULLEY				
Figure	Item	Part No.	Q'ty	Part Name	Remarks
E9	1	842559	1	complete clutch assy. W/ pulley for x9	
E9	2	825237	1	o-ring	
E9	3	825384	1	cup for rear pulley spring	
E9	4	825385	1	ring nut for clutch unit	
E9	5	828974	1	stop washer for rear pulley	
E9	6	828978	4	pin for rear pulley shaft	
E9	7	828984	1	pakcing for clutch	
E9	8	831098	1	rear pulley spring	
E9	9	846696	1	rear half pulley	
E9	10	825382	1	circlip	
E9	11	82627R	1	ball bearing 20×37×9	
E9	12	829808	1	needle cage bearing	
E9	13	848843	1	rear half pulley	
E9	14	825239	2	oil seal for rear pulley	
E9	15	840577	1		
E9	19	827116	1	nut for nut for retaining clutch drum	
E9	20	840319	1	washer for clutch drum 22×14.1×1.5	
E9	21	840320	1	washer 30.8×14.15×1.5	
E9	22	825763	1	spacer for clutch drum 17×26×3	
E9	23	825176	1	clutch drum	
E9	**24**	**95583037400**	**1**	**SC TYPE OIL SEAL**	

E10.	ENGINE COVER				
Figure	Item	Part No.	Q'ty	Part Name	Remarks
E10	2	575249	2	screw for fuel tank assy. (m6×22)	
E10	3	825667	1	circlip	
E10	4	840277	1	bearing for sidecase	
E10	5	842355	1	defector inside transmission cover	
E10	6	575249	4	screw for fuel tank assy. (m6×22)	
E10	7	253293	1	clamp	
E10	8	270793	4	self tapping screw (d3.85×16)	
E10	9	833314	1	plastic transmission cover	
E10	10	833318	1	filter for transmission cover	
E10	11	833320	2	sounproof material	
E10	12	833321	2	sounproof material	
E10	19	414834	7	screw	
E10	20	833663	2	screw m8×70t.e.es.10h 8.5	
E10	21	833664	2	screw m8×100t.e.es.10h 8.5	
E10	22	840439	1	block out plug for sidecase	

E11.	OIL PUMP ASSY.				
Figure	Item	Part No.	Q'ty	Part Name	Remarks
E11	1	840981	1	oil pump assy.(bv-500)	
E11	2	433477	2	screw for oil pump (m5×30)	
E11	3	847962	1	gasket for oil pump	
E11	3	847962	1	gasket for oil pump	
E11	4	830064	1	oil wall	
E11	5	830061	2	franged hes.head screw(m5×16)	
E11	6	827886	1	chain tensioner guide	
E11	7	830129	1	bolt for securing timing gear m6×25t.s	
E11	8	827882	1	lower chain guid	
E11	9	825737	1	steel spacer for chain guide	
E11	10	827889	1	timing chain	

E12.	WATER PUMP ASSY.				
Figure	Item	Part No.	Q'ty	Part Name	Remarks
E12	1	833717	1	waterpump cover	
E12	2	827929	1	waterpump fan	
E12	3	829557	1	washer 16×10×1	
E12	4	828394	1	drive shaft for water pump	
E12	5	497486	1	ring pump	
E12	11	842041	6	screw (m5×16)	
E12	12	827884	1	gasket for waterpump cover	

E13.	STARTING MOTOR				
Figure	Item	Part No.	Q'ty	Part Name	Remarks
E13	1	82699R	1	starter motor-. 82699r	
E13	2	82737R	1	starting gear	
E13	5	828109	1	bracket	
E13	7	8321175	1	torque limiter x9 500 u	
E13	8	584843	1	cable	
E13	11	584304	1	wiring loom \ hamess bv-500	
E13	12	828152	2	screw	
E13	13	015715	3	screw m5×12	
E13	14	969296	1	screw	
E13	15	006966	1	washer for brake disc (5.3×20×0.5)	

E14.	GENERATOR				
Figure	Item	Part No.	Q'ty	Part Name	Remarks
E14	1	58040R	1	magneto and stator assy. (flywheel assy)	
E14	2	58080R	1	stator plate bv-500	
E14	3	000097	1	key	
E14	4	825725	1	flywheel securing washer 30×14.1×3	
E14	5	827116	1	nut for nut for retaining clutch drum	
E14	6	479515	6	washer 9.9×6.1×3.5	
E14	7	8313225	1	flywheel assy.	
E14	8	840893	6	nut for securing flywheel m6×25 t.c.e.	
E14	9	122637	3	screw m6×30 t.c.e. i	

E15.	OIL FILTER				
Figure	Item	Part No.	Q'ty	Part Name	Remarks
E15	1	871048	1	flywheel case cover x9	
E15	2	847649	1	gasket for flywheel cover	
E15	2	847649	1	gasket for flywheel cover	
E15	3	411311	1	plug	
E15	4	825577	1	oil seal 8×16×7	
E15	5	825665	1	oil dip stick x9	
E15	6	479986	1	packing for oil pan plug (lower)	
E15	7	826033	1	oil filter	
E15	8	288474	1	packing for oil filter (20.35×1.78)	
E15	9	82823R	1	oil filter plug (bv-500)	
E15	10	285536	1	oil seal for oil filter	
E15	11	434429	1	screw	
E15	12	414837	3	screw for electrical starter motor-m6×25	
E15	13	414838	9	screw	
E15	14	414835	1	screw	
E15	15	584464	1	spring	
E15	16	849825	1	clamp	
E15	17	845978	1	clamp	
E15	18	829047	1	breatehr tube for crankase	
E15	19	015715	1	screw m5×12	
E15	20	237553	1	o-ring for breather	
E15	21	82658R	1	x9 oil cartridge	
E15	22	830886	1	plate for stator	
E15	23	018575	2	screw for outer h.t. coil (m5×10)	
E15	24	828930	1	panel for valve	
E15	25	433800	2	screw	

E15.	OIL FILTER				
Figure	Item	Part No.	Q'ty	Part Name	Remarks
E15	26	486075	1	washer	
E15	27	829661	1	oil pressure valve leader 125/180 .04/02	
E15	28	829486	1	oil pressure valve release spring	
E15	29	8290405	1	timing plug assembly	
E15	30	479986	1	packing for oil pan plug (lower)	
E15	31	82580R	1	oil temperature sensor master + leader	
E15	32	82778R	1	reed case bracket	
E15	33	497486	1	ceramic insert	
E15	34	497486	1	ring pump	

E16.	REDUCTION GEARS				
Figure	Item	Part No.	Q'ty	Part Name	Remarks
E16	1	8320525	1	transmission cover x9	
E16	2	829206	1	circlip	
E16	3	82659R	1	radial bearing	
E16	4	829201	1	oil seal 38×50×7	
E16	5	82660R	1	bearing for transfer gear 20×52×15	
E16	6	830198	4	screw m8×50 t.e.flange	
E16	7	487948	3	clamp	
E16	8	828911	3	screw m8-6g×35 t.flange	
E16	9	840733	1	breather pip for gearbox	
E16	10	847963	1	gasket for gearbox cover	
E16	10	847963	1	gasket for gearbox cover	
E16	11	8324875	1	transfer gear	
E16	12	8342335	1	driven pulley shaft	
E16	13	8347705	1	rear wheel shaft	
E16	14	269755	1	screw (m8×12)	
E16	15	485703	1	washer (brake-shoes)	

E17.	THROTTLE BODY				
Figure	Item	Part No.	Q'ty	Part Name	Remarks
E17	1	826000	1	plastic throttle body x9 500	
E17	2	830061	1	franged hes.head screw(m5×16)	
E17	3	830062	1	union pipe	
E17	4	8304275	1	fuel injector with support	
E17	5	289731	3	screw for electrical starter motor-m6×30	
E17	6	414837	3	screw for electrical starter motor-m6×25	

E18.	AIR CLEANER ASSY.				
Figure	Item	Part No.	Q'ty	Part Name	Remarks
E18	1	833084	1	air cleaner assy. (bv-500)	
E18	2	260918	1	clamp	
E18	3	CM001913	1	clamp	
E18	4	CM002908	1	clamp	
E18	5	258146	9	screw	
E18	6	829258	1	air filter b125	
E18	7	829259	1	packing	
E18	8	829543	1	pipe b 125	
E18	9	830015	1	clamp	
E18	10	830056	4	bush	
E18	12	834710	1	bv-500 intake sleeve for aibox	
E18	13	965502	1	airbox cover spacer	
E18	14	270793	2	self tapping screw (d3.85×16)	
E18	15	CM001907	2	clamp radiator hose runner 180 2t m.02	
E18	16	840743	1	oil tube	
E18	17	016406	1	washer	
E18	18	030052	1	screw	
E18	19	003056	1	washer for starter relay (6.4×12×1)	
E18	20	012533	2	washer for rear mudguard (6.4×11×0.5)	
E18	21	015761	1	screw for airbox (m6×50) hexag. bv.-500	
E18	22	016670	1	washer 12×4.5×1	
E18	23	018640	1	screw for air cleaner fitting (m6×50)	
E18	24	254485	2	plate for stator	
E18	25	258146	1	screw	
E18	26	833628	1	stirrup	

F1.	SOLENDID VALVE ASSY.				
Figure	Item	Part No.	Q'ty	Part Name	Remarks
F1	1	B80631700000	1	BREATHER PIPE COVER	
F1	2	B84510106000	1	REVERSE GEAR FIXED HOLDER COMP.(E.D)	
F1	3	92061200000	2	LOCK NUT(M12*1.25P)	
F1	4	B84510206000	1	REVERSE GEAR HOLDER FIXED PEDESTAL	
F1	5	90211007000	1	HEXAGON SCOKET HEAD CAP SCREW	
F1	6	90211007000	2	HEXAGON SCOKET HEAD CAP SCREW	
F1	7	B81440000000	1	GRAR BOX ASSY	
F1	8	B81441100000	1	SOCKET NUT	
F1	9	90191005003	2	HEXAGON FLANGE BOLT (M10*1.25P	
F1	9	B84861300000	1	ENGINE HANGER SUPPORT	
F1	10	B80631600000	4	SCREW	
F1	11	90190601200	2	HEXAGON FLANGE BOLT(M6*1.0P*12L)	
F1	18	90190601200	2	HEXAGON FLANGE BOLT(M6*1.0P*12L)	
F1	12	B82625000000	1	bracket A/C	
F1	13	90190602501	1	HEXAGON FLANGE BOLT(M6*1.0P*25L)	
F1	23	90100601500	4	SCREW OVAL	
F1	14	92040600001	1	HEXAGON FLANGE NUT	
F1	15	B80711400000	1	ventilation pipe	
F1	16	92221000001	2	CLIP	
F1	17	B80631800000	1	BREATHER COVER BRACKET	
F1	19	92061000000	1	U TYPE FLANGE NUT(M10*1.25P)	
F1	21	B84510400000	1	GEAR SHIFTING CABLE	
F1	22	B81445500000	1	COVER.GEAR SHITING YOKE	
F1	24	B81442410000	1	LOWER PAWL PLATE	
F1	25	B81442500000	1	SLIDE	
F1	26	B81445910000	1	TOP COVER CABLE	
F1	27	92140800007	1	PLAIN WASHER	
F1	28	90190801201	1	HEXAGON FLANGE BOLT (M8*12L)	

F1.	SOLENDID VALVE ASSY.				
Figure	Item	Part No.	Q'ty	Part Name	Remarks
F1	29	B81445700000	1	PLAT	
F1	30	90190601200	1	HEXAGON FLANGE BOLT(M6*1.0P*12L)	
F1	31	B81442700000	1	TOP COVER	
F1	32	90190601200	3	HEXAGON FLANGE BOLT(M6*1.0P*12L)	
F1	33	B81446000000	1	SLENOID BRACKET	
F1	34	B81446200000	1	SOLENOID	
F1	35	B85860100000	1	neutral position sensor	
F1	36	B81446110000	1	SOLENOID COVER	
F1	39	B81446610000	1	PACKING, SOLENOID COVER	
F1	37	90040601400	6	CR PAN HD MACHINE SCREW(M6*14L)	
F1	38	B81446300000	1	PLATE	
F1	**39**	**B81446700000**	**1**	**BREATHING PIPE**	

F2.	ENGINE HANGER, MUFFLER				
Figure	Item	Part No.	Q'ty	Part Name	Remarks
F2	1	B84860007700	1	ENGINE HANGER ASSY.	
F2	2	B84861500000	2	SPACER	
F2	3	B87010500000	1	PLASTIC PLUG	
F2	4	90191224500	1	HEXAGON FLANGE BOLT	
F2	5	B87060200000	2	SHOCKPROOF PEDESTAL COMP.	
F2	6	92060800000	4	HEXAGON FLANGE NUT (LOOSEPROOF	
F2	7	90191212500	2	HEXAGON FLANGE BOLT	
F2	8	90190805001	2	HEXAGON FLANGE BOLT (M8*45L)	
F2	9	90190801500	1	HEXAGON FLANGE BOLT (M8*15L)	
F2	10	B77010300000	3	PLASTICS PLUG	
F2	11	X2144290000	2	PLASTICS PLUG	
F2	12	B82810200000	1	SEAL BETWEEN MUFFLER AND HEAD	
F2	13	B82811000001	1	front section muffler	
F2	14	92050800000	2	HEXAGON CAP NUT	
F2	15	B82815000000	1	MUFFLER ASSY,RR SECTION	
F2	16	90191002600	1	HEXAGON FLANGE BOLT	
F2	17	90191004003	1	HEXAGON FLANGE BOLT	
F2	18	92141000007	2	WASHER(21D*2T)	
F2	19	92141200005	1	WASHER	
F2	20	92061200001	1	LOCK NUT	
F2	21	B87060200000	10	SHOCKPROOF PEDESTAL COMP.	
F2	22	90190801500	2	HEXAGON FLANGE BOLT (M8*15L)	
F2	23	B82810700000	1	CLOSED GASKET	
F2	24	B82810800000	1	CONNECTOR ASSY	
F2	25	B82810100003	1	HEAT PROTECTOR	
F2	26	90050601500	3	CR PAN HD. SCREW	
F2	27	92140600024	3	WASHER(TEMPERATURE-ENDURING)	
F2	28	B82815110000	1	SOCKET, MUFFLER ASSY	

F3.	PLASTIC COVERS				
Figure	Item	Part No.	Q'ty	Part Name	Remarks
F3	**1**	**B86250002R00**	**1**	**Ceiling Cover(orange 2R)**	
F3	**1**	**B86250006900**	**1**	**Ceiling Cover(benz-black 69)**	
F3	**1**	**B86250007100**	**1**	**Ceiling Cover(white 71)**	
F3	2	90200601800	4	BOLT WITH WASHER	
F3	3	B87010900000	2	Ceiling Cover Rubber Mat	
F3	**4**	**B86250202R00**	**1**	**REAR BODY COVER,LH(orange 2R)**	
F3	**4**	**B86250206900**	**1**	**REAR BODY COVER,LH(benz-black 69)**	
F3	**4**	**B86250207100**	**1**	**REAR BODY COVER,LH(white 71)**	
F3	5	B86340006500	1	REAR FENDER,LH	
F3	6	B87060100000	1	BRACKET,REAR BODY COVER,LH	
F3	7	90130501400	6	CR ROUND HD TAPPING SCREW	
F3	**8**	**B862E0202R00**	**1**	**REAR BODY COVER,RH(orange 2R)**	
F3	**8**	**B862E0206900**	**1**	**REAR BODY COVER,RH(benz-black 69)**	
F3	**8**	**B862E0207100**	**1**	**REAR BODY COVER,RH(white 71)**	
F3	9	B863D0006500	1	REAR FENDER,RH	
F3	10	B870F0100000	1	BRACKET,REAR BODY COVER,RH	
F3	11	B86250106800	1	LEFT COVER	
F3	12	B862E0106800	1	RIGHT COVER	
F3	13	B86310106500	1	LEFT DOWN FENDER	
F3	**14**	**B86310002R00**	**1**	**LEFT UP FENDER(orange 2R)**	
F3	**14**	**B86310006900**	**1**	**LEFT UP FENDER(benz-black 69)**	
F3	**14**	**B86310007100**	**1**	**LEFT UP FENDER(white 71)**	
F3	15	B86310200000	1	DOWN FENDER FIEXD BRACKET	
F3	16	90130501400	10	CR ROUND HD TAPPING	
F3	17	B84210500000	1	PLATE SIDE LH	
F3	18	B842A0500000	1	PLATE SIDE RH	
F3	19	B863A0106500	1	RIGHT DOWN FENDER	

F3.	PLASTIC COVERS				
Figure	Item	Part No.	Q'ty	Part Name	Remarks
圖號	項次	件號	用量	英文名稱	備註
F3	**20**	**B863A0002R00**	**1**	**RIGHT UP FENDER(orange 2R)**	
F3	**20**	**B863A0006900**	**1**	**RIGHT UP FENDER(benz-black 69)**	
F3	**20**	**B863A0007100**	**1**	**RIGHT UP FENDER(white 71)**	
F3	21	B863A0200000	1	DOWN FENDER FIEXD BRACKET	
F3	**22**	**B86210002R00**	**1**	**WINDSHIELD,FRT ABOVE(orange 2R)**	
F3	**22**	**B86210006900**	**1**	**WINDSHIELD,FRT ABOVE(benz-black 69)**	
F3	**22**	**B86210007100**	**1**	**WINDSHIELD,FRT ABOVE(white 71)**	
F3	23	B86210106800	1	WINDSHIELD,FRT LOWER	
F3	24	E9666080000	3	FIXED PLATE	
F3	25	90130501400	3	CR ROUND HD TAPPING	

F4.	FRAMES				
Figure	Item	Part No.	Q'ty	Part Name	Remarks
F4	1	B84210907700	1	NON-ROLL TUBE COMP.LH SIDE	
F4	2	B842A1907700	1	NON-ROLL TUBE COMP.LH SIDE	
F4	3	B84211007700	1	UP ACROSS TUBE COMP.	
F4	4	B84211800000	4	WASHER PIPE B	
F4	5	90191006001	2	HEXAGON FLANGE BOLT	
F4	6	92061000004	2	HEXAGON FLANGE NUT	
F4	7	B86170000000	1	INTERIOR MIRROR ASSY	
F4	8	90211003000	4	HEXAGON SCOKET HEAD CAP SCREW	
F4	9	B84211800000	4	WASHER PIPE B	
F4	10	90191006001	2	HEXAGON FLANGE BOLT	
F4	11	92061000004	2	HEXAGON FLANGE NUT	
F4	**12**	**B86160000000**	**1**	**BACK MIRROR COMP**	
F4	**12-1**	**B861F0100000**	**1**	**LH BACK MIRROR**	
F4	**12-1**	**B861F0200000**	**1**	**RH BACK MIRROR**	
F4	13	B57012300000	1	TOOL BOX	
F4	14	90190601200	2	HEXAGON FLANGE BOLT(M6*1.0P*12L)	
F4	15	B86710000000	1	DRIVER SEAT ASSY.	
F4	16	B86710100000	1	PASSENGER SEAT ASSY.	
F4	17	92110800000	8	SPRING WASHER(8D*14D*2.2T)	
F4	18	92040800001	8	HEXAGON FLANGE NUT (M8)	
F4	19	B86710200000	2	BELT.SAFETY	
F4	**20**	**B84210007700**	**1**	**FRAME ASSY**	
F4	21	90211003000	12	HEXAGON SCOKET HEAD CAP SCREW	
F4	22	B84211600000	1	WASHER PIPE A	
F4	23	B84211500000	1	BUSH PIPE	
F4	24	90211006500	1	HEXAGON SCOKET HEAD CAP SCREW	
F4	25	B84211107700	2	LH NON-ROLL FIXED TUBE COMP.	
F4	**26**	**B84217610000**	**1**	**FRAME BOTTOM PLATE (A). LEFT**	
F4	**27**	**B842A7610000**	**1**	**FRAME BOTTOM PLATE (A). RIGHT**	
F4	28	90190601500	8	HEXAGON FLANGE BOLT (M6*15L)	
F4	29	B87065400000	1	TOOL KIT ASSY.	R500歐規_96040

F5.	WHEELS				
Figure	Item	Part No.	Q'ty	Part Name	Remarks
F5	1	B84011006000	4	RIM.FR	
F5	2	P140B3300001	4	TIRE VALVE	
F5	**3**	**B840B3200000**	**2**	**FR.TIRE ASSY(ON ROAD)**	**ON ROAD**
F5	**3**	**B840B3200001**	**2**	**FR.TIRE ASSY(OFF ROAD)**	**OFF ROAD**
F5	**4**	**B840G3200000**	**2**	**RR.TIRE ASSY(ON ROAD)**	**ON ROAD**
F5	**4**	**B840G3200001**	**2**	**RR.TIRE ASSY(OFF ROAD)**	**OFF ROAD**
F5	5	92051000003	16	LUG NUT. CAP	
F5	6	B87010300000	4	DUSTPROOF COVER	
F5	10	B87061000000	1	BALANCE BRACKET	
F5	7	X0445020000	4	BUSH,STEERING SHAFT	
F5	8	X0445010000	8	STEERING AXLE HOLDER	
F5	9	90190806000	8	HEXAGON FLANGE BOLT(M8*60L)	

F6.	CONTROL CABLES				
Figure	Item	Part No.	Q'ty	Part Name	Remarks
F6	1	B85446000000	1	THROTTLE CABLE	
F6	2	B84510700000	1	REVERSE GEAR PULL-WIRE-DISH COMP.	
F6	3	B84510900000	1	BUSHE	
F6	4	X2451050000	1	COMPRESSING SPRING	
F6	5	92140600017	2	WASHER	
F6	6	90190804003	1	Hexangon Flange Bolt	
F6	7	92040600000	2	HEXAGON FLANGE NUT (M6*1.0P)	
F6	8	B84510800000	1	DIFFERENTIAL LOCK CABLE	
F6	9	B84510300000	1	GEAR SHAFTING ASSY.	
F6	10	90210801201	3	HEXAGON SCOKET SCREW	
F6	11	B84510400000	1	GEAR SHIFTING CABLE	
F6	12	B84510000000	1	LEVER ASSY.PARKING BRAKE	
F6	13	90190601500	1	HEXAGON FLANGE BOLT (M6*15L)	
F6	14	B87010700000	2	SNAP PLUG	
F6	15	B85440010000	2	CABLE ASSY. RR BRAKE	
F6	16	B84510800000	1	DIFFERENTIAL LOCK CABLE	
F6	21	90190601500	4	HEXAGON FLANGE BOLT (M6*15L)	
F6	23	B84511600000	1	PACKING, DIFFERENTIAL CABLE	

F7.	BRAKE SYSTEM				
Figure	Item	Part No.	Q'ty	Part Name	Remarks
F7	1	B84030000000	1	MASTER CYLINDER	
F7	2	B84037000000	1	BACK BREAK TUBE	
F7	3	B84036100000	1	FR, RIGHT BRAKE FLUID HOSE COMP	
F7	4	B84036000000	1	FR, LEFT BRAKE FLUID HOSE COMP	
F7	5	92141000002	6	WASHER(10D*15D*1.5T)	
F7	6	P14038110000	2	JOINT BOLT,BRAKE HOSE	
F7	7	90190802600	2	HEXAGON FLANGE BOLT (M8*26L)	
F7	8	92040800001	2	HEXAGON FLANGE NUT (M8)	
F7	9	90190805500	3	HEXAGON FLANGE BOLT	
F7	10	92060800000	3	HEXAGON FLANGE NUT (LOOSEPROOF	
F7	11	B84042700000	1	PADDLE ASSY,ACC	
F7	12	B84042800000	1	PADDLE ASSY,BRAKE	
F7	13	B84042500000	2	TORSION SPRING	
F7	14	B84042600000	1	PEDAL FIXED BOLT	
F7	15	93520303200	2	COTTER PIN	
F7	16	93540802500	1	LOCK PIN	
F7	17	93520202000	1	COTTER PIN	
F7	18	90190602002	1	HEXAGON FLANGE BOLT(M6*20L)	
F7	19	B85849000000	1	BRAKING SENSOR	

F8.	STEERING MECHANISM				
Figure	Item	Part No.	Q'ty	Part Name	Remarks
F8	1	B844E0600000	1	STEERING AXLEL(RH)	
F8	2	B84450700000	1	FIXED PLATE	
F8	3	B84451100000	1	BALL JOINT	
F8	4	92173400000	1	CRI CLIP EXTERNAL (34*1.5T)	
F8	5	92110800000	4	SPRING WASHER(8D*14D*2.2T)	
F8	6	90190802001	4	HEXAGON FLANGE BOLT(M8*20L)	
F8	7-1	B844E1200000	1	RH TURING RESTRICTION PLATE	
F8	7-2	B84451200000	1	LH TURING RESTRICTION PLATE	
F8	8	90190601500	2	HEXAGON FLANGE BOLT (M6*15L)	
F8	9	B84041000000	2	FRONT HUB ASSY.	
F8	10	B84035000000	1	BRAKE DISC	
F8	11	C1403510000	8	SCREW, FR BRAKE DISK	
F8	12	B86120100000	1	TURN MECHANISM ASS,Y	
F8	13	90191004000	3	HEXAGON FLANGE BOLT (M10*1.25P*40L)	
F8	14	92091000000	2	SLOTTING LOCK NUT	
F8	15	93520303200	2	COTTER PIN	
F8	16	B86120300000	1	TURN BASE	
F8	17	90190801500	2	HEXAGON FLANGE BOLT (M8*15L)	
F8	18	B86120200000	1	CONNECT SHAFT, UNIVERSAL JOINT	
F8	19	90210802500	2	HEXAGON SCOKET HD. CAP BOLT(M8*25L)	
F8	21	B85490000000	1	A TURN SIGNAL SYNTHETIC SWITCH COMBINATION	
F8	22	B86120000000	1	steering wheel	
F8	23	92061200001	1	LOCK NUT	
F8	24	B86120100000	1	TURN MECHANISM ASS,Y	
F8	25	90210802500	2	HEXAGON SCOKET HD. CAP BOLT(M8*25L)	
F8	26	B84450600000	1	STEERING AXLEL(LH)	
F8	27	92021000001	2	NUT	
F8	28	90190802001	4	HEXAGON FLANGE BOLT(M8*20L)	
F8	29	B86120600000	1	HANDEL COVER	

F9.	SWING ARMS				
Figure	Item	Part No.	Q'ty	Part Name	Remarks
F9	1	B844G0007700	1	A-ARM ASSY. LOWER,FR	
F9	2	B844G1007700	1	UPPER A ARM (R)	
F9	3	90191207500	4	HEXAGON FLANGE BOLT	
F9	4	92061200000	4	LOCK NUT(M12*1.25P)	
F9	**5**	**B84033100000**	**1**	**CALIPER ASS'Y-FR BRAKE**	
F9	**5-1**	**B840C3400000**	**1**	**INNER BRAKE PAD**	
F9	**5-2**	**B840C3500000**	**1**	**OUTER BRAKE PAD**	
F9	6	92091200002	2	SLOTTING LOCK NUT	
F9	7	93520303200	2	COTTER PIN	
F9	**8**	**B84710002R01**	**2**	**FRONT SUSPENSION (orange)**	
F9	**8**	**B84710000001**	**2**	**FRONT SUSPENSION (red)**	
F9	9	90191205501	2	HEXAGON FLANGE BOLT	
F9	10	92061200000	2	LOCK NUT(M12*1.25P)	
F9	11	B84470007700	1	UPPER A ARM (L)	
F9	12	B84471007700	1	A-ARM ASSY. UPPER,FL	
F9	13	B84041000000	2	FRONT HUB ASSY.	
F9	14	B84035000000	2	BRAKE DISC	
F9	15	C1403510000	8	SCREW, FR BRAKE DISK	
F9	**16**	**B84033000000**	**1**	**CALIPER ASS'Y-FL BRAKE**	
F9	**16-1**	**B840C3400000**	**1**	**INNER BRAKE PAD**	
F9	**16-2**	**B840C3500000**	**1**	**OUTER BRAKE PAD**	
F9	17	90210802002	4	HEXAGON SCOKET SCREW	
F9	18	92141200005	2	PLAIN WASHER	

F10.	DRIVING SHAFT, ABSORBERS				
Figure	Item	Part No.	Q'ty	Part Name	Remarks
F10	1	B84830007700	1	SWING ARM DOWN. LH	
F10	2	B848C0007700	1	SWING ARM DOWN. RH	
F10	3	B84831300000	2	SWING ARM SPACER TUBE	
F10	4	90191628001	2	HEXAGON FLANGE BOLT	
F10	5	92061600000	2	U TYPE FLANGE NUT	
F10	**6**	**B84810002R01**	**2**	**REAR SUSPENSION (orange)**	
F10	**6**	**B84810000001**	**2**	**REAR SUSPENSION (red)**	
F10	7	90191205501	4	HEXAGON FLANGE BOLT	
F10	8	92061200000	4	LOCK NUT(M12*1.25P)	
F10	9	B87060500000	2	DRIVING GEAR ASSY	
F10	10	B87060800000	2	DRIVING GEAR BUSH	
F10	11	92091800000	2	SLOTTING LOCK NUT	
F10	12	93520303200	2	COTTER PIN	
F10	13	B87060400000	1	FIXED PLATE SENSOR	
F10	14	B556A030000	1	MAGNETIC	
F10	15	90190501201	2	HEXAGON FLANGE BOLT (M5*12L)	
F10	16	B84035000000	2	BRAKE DISC	
F10	17	C1403510000	8	SCREW, FR BRAKE DISK	
F10	18	B84071300000	2	REAR HUB BODY ASSY.	
F10	19	B84071200000	2	HUB INNER SEAT ASSY, REAR	
F10	**20**	**B84066000000**	**1**	**CALIPER ASS'Y-RL BRAKE**	
F10	**20-1**	**B840F6400000**	**1**	**INNER BRAKE PAD**	
F10	**20-2**	**B840F6500000**	**1**	**OUTER BRAKE PAD**	
F10	21	90210802002	4	HEXAGON SCOKET SCREW	
F10	22	92061000000	8	U TYPE FLANGE NUT(M10*1.25P)	
F10	**23**	**B84066200000**	**1**	**MECHENICAL BREAKING CLIPPER(L)**	
F10	**23-1**	**B840F0500000**	**1**	**INNER BRAKE PAD**	
F10	**23-2**	**B840F0400000**	**1**	**OUTER BRAKE PAD**	

F10.	DRIVING SHAFT, ABSORBERS				
Figure	Item	Part No.	Q'ty	Part Name	Remarks
F10	24	B84033300000	4	HEXAGON FLANGE BOLT	
F10	25	B87010800000	1	SNAP BUSHING	
F10	26	B84066100000	1	CALIPER ASS'Y-RR BRAKE	
F10	**26-1**	**B840F6400000**	**1**	**INNER BRAKE PAD**	
F10	**26-2**	**B840F6500000**	**1**	**OUTER BRAKE PAD**	
F10	**27**	**B840F6200000**	**1**	**MECHENICAL BREAKING CLIPPER(R)**	
F10	**27-1**	**B840F0500000**	**1**	**INNER BRAKE PAD**	
F10	**27-2**	**B840F0400000**	**1**	**OUTER BRAKE PAD**	
F10	28	B84831400000	4	AUTOMATIC OILING BUSH	

F11.	REAR RACK				
Figure	Item	Part No.	Q'ty	Part Name	Remarks
F11	1	B86760007700	1	REAR CARGO RACK	
F11	**2**	**B86660000000**	**2**	**TAIL LIGHT ASS'Y**	
F11	**2-1**	**98311221051**	**2**	**TAIL LIGHT BULB(21/5 W)**	
F11	**3**	**B86670000000**	**2**	**WINKER LIGHT ASS'Y**	
F11	**3-1**	**98211221991**	**2**	**BULB (21W)**	
F11	4	90040502000	8	CR PAN HD MACHINE SCREW(M5*20L)	
F11	5	C16690000001	2	SIDE REFLECTOR	
F11	6	92040600000	2	HEXAGON FLANGE NUT (M6*1.0P)	
F11	**7**	**P56669000001**	**1**	**LICENCE LAMP ASSY**	
F11	**7-1**	**P566F960000**	**1**	**BULB, LICENCE LAMP**	
F11	**7-2**	**P566F910000**	**1**	**COVER, LICENCE LAMP**	
F11	8	90110401200	2	CR PAN HD TAPPING SC	
F11	9	B87010400000	1	COVER,LICENCE LAMP ASSY.	
F11	10	90190801200	3	HEXAGON FLANGE BOLT (M8*12L)	
F11	11	90190807500	1	HEXAGON FLANGE BOLT (M8*75L)	
F11	12	92060800000	1	HEXAGON FLANGE NUT (LOOSEPROOF	
F11	13	B84220007700	1	RR.BULWARK PIPE COMP	
F11	14	90191014500	1	HEXAGON FLANGE BOLT	
F11	15	92061000000	1	U TYPE FLANGE NUT(M10*1.25P)	
F11	16	90190807000	2	HEXAGON FLANGE BOLT	
F11	17	92060800000	2	HEXAGON FLANGE NUT (LOOSEPROOF	
F11	**18**	**B86669000000**	**1**	**tertiary brake lamp (RED)**	
F11	**18-1**	**B866F0100000**	**1**	**SHELL (RED)**	
F11	**18-2**	**B866F0500000**	**1**	**BULB (16W)**	
F11	**18**	**B86669000001**	**1**	**tertiary brake lamp (BLACK)**	
F11	**18-1**	**B866F0100001**	**1**	**SHELL (BLACK)**	
F11	**18-2**	**B866F0500000**	**1**	**BULB (16W)**	
F11	**18**	**B85816400000**	**1**	**rubber plug**	**/o tertiary brake**
F11	19	90040502000	2	CR PAN HD MACHINE SCREW(M5*20L)	
F11	20	92140500002	2	PLAIN WASHER	
F11	21	92020500000	2	HEXAGON NUT (M5*0.8P)	

F12.	FRONT BUMPER, HEADLAMP				
Figure	Item	Part No.	Q'ty	Part Name	Remarks
F12	**1**	**B86610000000**	**2**	**HEAD LIGHT ASS'Y(35w/35w)**	
F12	**1-1**	**98151235351**	**2**	**HEAD LAMP BULB(35w/35w)**	
F12	**1-2**	**98141205001**	**2**	**POSITION LAMP(5w)**	
F12	2	B866A0000000	2	HEAD LIGHT ASS'Y(w/o position lamp)	
F12	**3**	**P066H0106502**	**1**	**RR SIGNAL LAMP ASSY,RH**	
F12	**4**	**P066G0106502**	**1**	**RR SIGNAL LAMP ASSY,LH**	
F12	**4-1**	**P066C0300002**	**2**	**SIGNAL LAMP COVER**	
F12	**4-2**	**98211210990**	**2**	**BULB**	**10W, YELLOW**
F12	5	92040600000	2	HEXAGON FLANGE NUT (M6*1.0P)	
F12	6	B87060307700	1	PROTECT PLANK, FRONT	
F12	7	90190801200	2	HEXAGON FLANGE BOLT (M8*12L)	
F12	8	90190802001	2	HEXAGON FLANGE BOLT (M8*20L)	

F13.	TANK, PUMP				
Figure	Item	Part No.	Q'ty	Part Name	Remarks
F13	1	B85215000000	1	FUEL TANK	
F13	2	B852A8200000	1	PACKING	
F13	3	B85218000000	1	FUEL PUMP COMP	
F13	4	B852A8100000	1	FUEL PUMP CAP	639044
F13	5	B85214100000	1	HEAT INSULATION ALUMINUM FOIL	
F13	6	90190802001	2	HEXAGON FLANGE BOLT(M8*20L)	
F13	7	B87060900000	2	clip	
F13	8	B85213100000	1	GAS CAP	
F13	9	B85260100000	1	GAS CAP CONNECTING PIPE	
F13	11	90040501200	4	CR PAN HD MACHINE SCREW(M5*12L)	
F13	12	B85213000000	1	tank cover comp	
F13	13	90210602501	4	HEXAGON SCOKET SCREW	
F13	14	B85260300000	1	GASOLINE HOSE(B)	
F13	15	B85260200000	1	GASOLINE HOSE(A)	
F13	16	B85215400000	1	OIL TANK	
F13	17	90190601200	3	HEXAGON FLANGE BOLT(M6*1.0P*12L)	
F13	18	B85215200000	1	TANK BRACKET(A)	
F13	19	B85215300000	1	TANK BRACKET(B)	
F13	20	90190801200	2	HEXAGON FLANGE BOLT (M8*12L)	
F13	21	B85214000000	3	RUBBER MAT	
F13	22	90190801500	2	HEXAGON FLANGE BOLT (M8*15L)	

F14.	DASHBOARD, SWITCHES				
Figure	Item	Part No.	Q'ty	Part Name	Remarks
F14	1	B86140106500	1	PLATE BOTTOM SPEEDMETER	
F14	2	B5582610000	1	SPARK SWITCH	
F14	3	B85610000000	1	SPEEDMETER ASSY.	
F14	4	B5582610000	1	SPARK SWITCH	
F14	5	B5583040000	1	SWITCH	
F14	6	B87010600000	1	WATER METER BUSH	
F14	7	B85011100000	1	WATER METER	
F14	9	92370500003	2	U TYPE SPRING NUT	
F14	10	90150501600	1	CR TRUSS HD TAPPING SCREW (M5*16L)	
F14	11	90150501600	3	CR TRUSS HD TAPPING SCREW (M5*16L)	
F14	12	B86130106500	1	SPEEDOMETER COVER (L)	
F14	13	92370500003	3	U TYPE SPRING NUT	
F14	14	90190601200	3	HEXAGON FLANGE BOLT(M6*1.0P*12L)	

F15.	COOLING SYSTEM				
Figure	Item	Part No.	Q'ty	Part Name	Remarks
F15	1	B85010100000	1	WATER PIPE	
F15	2	B87060700000	2	CLIP	
F15	3	B85011000000	1	WATER CONNECTING PIPE(2)	
F15	4	B85010400000	1	WATER PIPE	
F15	5	B87060700000	1	CLIP	
F15	6	B85010200000	1	WATER PIPE	
F15	7	B87060600000	1	CLIP	
F15	8	B85010900000	1	WATER CONNECTING PIPE(1)	
F15	9	B85010300000	1	WATER PIPE	
F15	10	B87060600000	1	CLIP	
F15	11	B87060700000	1	CLIP	
F15	12	B85010500000	1	WATER PIPE	
F15	13	B77060200000	2	CLIP	
F15	14	B85010700000	1	WATER PIPE	
F15	15	92221000001	2	CLIP	
F15	16	B85010800000	1	WATER PIPE	
F15	17	92220800002	2	HOSE CLAMP	
F15	18	X35010200001	1	CAP COMP. ,RADIATOR	
F15	19	90190601200	8	HEXAGON FLANGE BOLT(M6*1.0P*12L)	
F15	20	B85010000001	1	RADIATOR ASSY.	
F15	21	B76351000000	1	WATER TANK FOR FAN	
F15	22	B87010206000	1	SAFE HAIRNET COMP.	
F15	23	B87011006500	1	COVER	
F15	24	90190601200	12	HEXAGON FLANGE BOLT(M6*1.0P*12L)	
F15	25	92140600017	2	WASHER	
F15	26	90210602001	2	HEXAGON SCOKET SCREW	
F15	27	90210602001	2	HEXAGON SCOKET SCREW	
F15	28	90190601200	2	HEXAGON FLANGE BOLT(M6*1.0P*12L)	

F15.	COOLING SYSTEM				
Figure	Item	Part No.	Q'ty	Part Name	Remarks
F15	29	B750A0200001	1	AUXILIARY COOL TANK. SAFE COVER	
F15	30	92370500003	1	U TYPE SPRING NUT	
F15	31	90150501600	1	CR TRUSS HD TAPPING SCREW (M5*16L)	
F15	32	92140500014	1	WASHER (5.5D*12D*1T)	
F15	33	P1522300000	1	OIL COVER	
F15	34	B75010100000	1	AUXILIARY COOL TANK	
F15	35	B85010600000	1	WATER PIPE	
F15	36	92221000001	2	CLIP	
F15	37	90190601200	1	HEXAGON FLANGE BOLT(M6*1.0P*12L)	
F15	38	B77013500000	1	RUBBER WASHER	
F15	39	B87011200000	2	RUBBER PLUG	

F16.	ELECTRIC PARTS				
Figure	Item	Part No.	Q'ty	Part Name	Remarks
F16	**1**	**B85816010000**	**1**	**HARNESS.WIRE ASSY**	
F16	**1-1**	**98701201000**	**1**	**FUSE(1A)**	**1A**
F16	**1-2**	**98701203000**	**2**	**FUSE(3A)**	**3A**
F16	**1-3**	**98701210000**	**2**	**FUSE(10A)**	**10A**
F16	**1-4**	**98701215000**	**3**	**FUSE(15A)**	**15A**
F16	**1-5**	**98701225000**	**1**	**FUSE(25A)**	**25A**
F16	2	B85816100000	1	HARNESS.WIRE	
F16	3	90190601200	2	HEXAGON FLANGE BOLT(M6*1.0P*12L)	
F16	4	92040600000	2	HEXAGON FLANGE NUT (M6*1.0P)	
F16	5	B85846000000	1	COIL COMP	
F16	6	B85830000000	1	BATTERY	
F16	7	B5583030000	1	BAND.BATTERY	
F16	8	B85830200000	1	BATTERY (+,-) LINE COMP.	
F16	9	B85810000000	1	STARTER RELAY	
F16	10	B85890000000	1	ECU	
F16	11	90190501201	4	HEXAGON FLANGE BOLT (M5*12L)	
F16	12	B85840000000	1	VOL REGULATOR COMP.	
F16	13	90190603000	2	HEXAGON FLANGE BOLT (M6*30L)	
F16	14	ES581200000	5	relay	
F16	15	C1581300000	1	BACK PROTECTIVE EQUIPMENT COMP	
F16	16	B77011700000	1	STARTER RELAY COVER	
F16	17	B5583600000	1	HORN.L	
F16	18	90190601200	3	HEXAGON FLANGE BOLT(M6*1.0P*12L)	
F16	19	P2586011000	1	FLASHER RELAY ASSY	
F16	21	90040601000	3	CR TRUSS HD MACHINE SCREW(M6*10L)	
F16	22	B85510000000	1	SWITCH COMP.	
F16	23	B85520000000	1	MAIN KEY	
F16	24	B85530000000	1	STEERING LOCK	
F16	25	B85213000000	1	FUEL CAP	
F16	26	P255B010000	1	DUMMY KEY	
F16	28	B5583010000	1	CUSHION.BATTERY UNDER	
F16	29	B87011300000	1	RELAY COVER	

F17.	LABELS				
Figure	Item	Part No.	Q'ty	Part Name	Remarks
F17	1	B86010200000	1	START FACEPLATE LABEL	
F17	2	B86010300000	1	LABEL. DIFFERENTIAL	
F17	3	B86010400000	1	BR-500I. LABEL	
F17	4	B86010500000	1	LABEL.BUG RACER	
F17	5	B86030100000	1	WARNING LABEL,GEARBOX	
F17	6	B86030200000	1	WARNING LABEL,RADIATOR	
F17	7	B86030300000	1	LABEL.REAR CARGO RACK	
F17	8	B86010600000	1	SKIDPROOF PAPER	
F17	9	B86010700000	1	FUSE STICKER	
F17	10	B86010800000	1	RELAY STICKER	
F17	11	B86030500000	1	WARRANTY STICKER	
F17	12	B86010100000	1		BR500歐規_96042
F17	13	P1603040000	1		BR500歐規_96042
F17	14	B86030400000	1		BR500歐規_96042
F17	15	B86010900000	1		BR500歐規_96042
F17	16	B86011000000	1		BR500歐規_96042

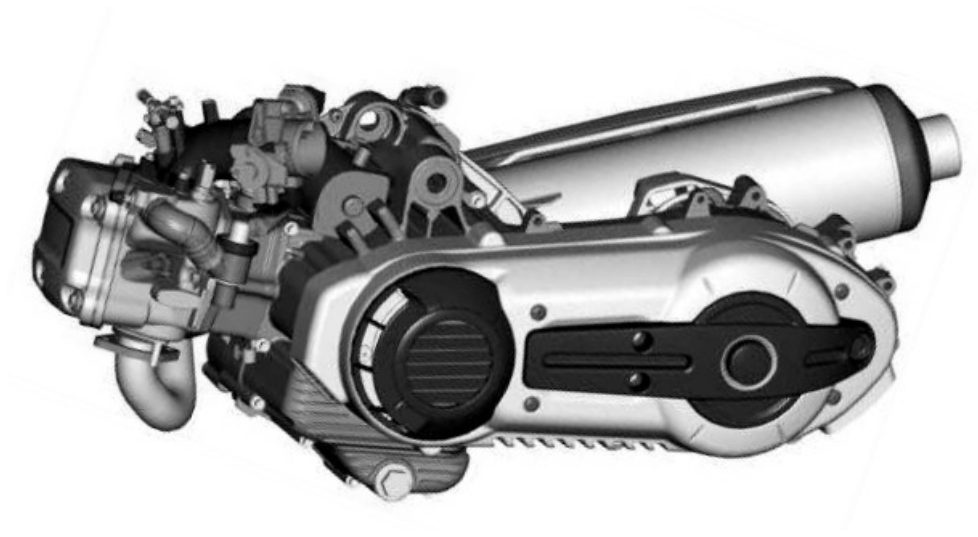

BR-500 ENGINE PARTS

AVVERTENZE

1) Nel presente catalogo sono illustrati i particolari forniti come ricambi per i veicoli indicati in A1 a partire dai n° di telaio a fianco riportati.
2) Per la ricerca delle tavole vedere l'indice rappresentato in D1 e D2.
3) L'indice numerico dei particolari con le rispettive denominazioni è riportato da A2.
4) Per un corretto uso del Catalogo tener presente quanto segue:
   - L'intestazione della tavola riporta la denominazione dei gruppo raffigurato e l'indicazione dei Mod. per i quali la tavola stessa è valida: eventuali tavole specifiche per il mercato Estero sono identificate anche dalla dicitura "Mercato Estero".

Nota bene - Consultare la tavola "Chiave di lettura" riportata in CI a titolo di esempio.

NOTICE

1) En ce catalogue on a illustré les pièces livrées comme rechanges pour les véhicules indiqués en AI à partir des n. de châssis indiqués à côte.
2) Pour la recherche des tables voir l'index donné en D1 et D2.
3) L'index numérique des pièces avec les dénominations respectives est donné à partir de A2.
4) Pour interpréter correctement le catalogue observer ce qui suit:
   - La tête de la table porte la dénomination du groupe illustré et l'indication des modèles pour lesquels la table méme est valable: d'éventuelles tables spécifiques pour le marché étranger sont identifiées même par l'expression "Marché Etranger".

N.B. - Consulter la table "clé de lecture" donnée en C1 à titre d'exemple.

NOTICE

1) In this catalogue there are illustrated the parts supplied as spares for vehicles indicated in A1 starting from serial chassis numbers carried on the side.
2) For the consultation of the tables see the index in D1 and D2.
3) The numeric index of the pieces with the concerning part name is carried out starting from A2.
4) For a correct interpretation of the catalogue bear in mind what follows:
   - Tabie heading carries out part name of the illustrated unit and indication of models for which the table itself is valid: eventuel specific tables for foreign market bear also the wording "Foreign Market".

N.B. - Consult the "reading key" carried out in CI as an example.

ANMERKUNG

1) Im vorliegenden Katalog sind jene Teile wiedergegeben, welche als Ersatzteile der in A1 angeführten Fahrzeuge ab seitlich angezeigten Rahmennummer geliefert werden.
2) Für das Auffinden der Tafeln siehe Inhaltserverzeichnis D1 und D2.
3) Das Nummernverzeichnis der Teile mit der entsprechenden Bezeichnung ist in A2 wiedergegeben.
4) Für den richtigen Gebrauch des Katalogs bitte folgendes beachten:
   - Die Aufschritt der Tafel gibt die Benennung der abgebildeten Gruppe und die Bestimmung des Modells wieder, für welche die Tafel gültig ist: eventuelle besondere Tafeln für den ausländischen Markt sind auch durch die ufschritt "Ausländischer Markt" erkenntlich.

N.B. - Als Beispiel zur "Aufschlüsselung" dient die in C1 wiedergegebene Tafel.

ADVERTENCIAS

1) En este catálogo están ilustradas las piezas suministradas como repuestos para los vehículos indicados en A1 a partir de los números de chasis indicados al lado.
2) Para la consultacíon de las tablas ver il índice en D1 y D2.
3) El índice numérico de las piezas con las respectivas denominaciones empieza en A2.
4) Para una correcta interpretación del catálogo tener presente lo siguiente:
   - El titulo de las tablas indica la denominación del grupo ilustrado y la indicación de los modelos para los cuales la tabla misma es válida; en eventuales tablas específicas para el mercado extranjero figura también "Mercado exterior".

N.B. - Consultar la "Liave de lectura" indicada en C1 come ejemplo.

TABELLA ABBREVIAZIONI E SIMBOLI		TABLE ABBREVIATIONS ET SYMBOLES	TABLE OF ABBREVIATIONS AND SYMBOLS	TABELLE ABKÜRZUNGEN UND ZEICHEN	TABLA ABREVIACIONES Y SIMBOLOS
FC1	Categoria 1	Catégorie 1	Category 1	Kategorie 1	Cat. 1
FC2	Categoria 2	Catégorie 2	Category 2	Kategorie 2	Cat. 2
FC3	Categoria 3	Catégorie 3	Category 3	Kategorie 3	Cat. 3
FC4	Categoria 4	Catégorie 4	Category 4	Kategorie 4	Cat. 4
DX	Destro	Droit	R.H.	Rechte	Der.
SX	Sinistro	Gauche	L.H.	Linke	Izq.
CMP	Champion	Champion	Champion	Champion	Champion
NGK	NGK	NGK	NGK	NGK	NGK
PIR	Pirelli	Pirelli	Pirelli	Pirelli	Pirelli
MIC	Michelin	Michelin	Michelin	Michelin	Michelin
POST	Posteriore	AR.	Rear	Hinter	Trasero
ANT	Anteriore	AV.	Front	Vorder	Delantero
MT	Fornibile a metri	Demander en mètres	Request by yards	In metern bestellen	Suminístrase por metros
ASP	Aspirazione	Admission	Intake	Ansaugung	Aspiración
SCA	Scarico	Vidange	Exhaust	Auspuff	Descarga

TABELLA SIGLE E COLORI		TABLE SIGLES COULEURS	TABLE OF COLOUR ABBREVIATIONS	TABELLE KENNZEICHEN DER FARBEN	TABLA SIGLAS COLORES
204/A	Verniciato Blu Imperiale 204/A	Verni Bleu Impérial 204/A	Imperial Blue 204/A Painted	Kaiserlich blau 204/A lackiert	Pintado Azul Imperial 204/A
731	Verniciato Grigio Smoky 731	Verni Gris Smoky 731	Smoky Grey 731 Painted	Smoky Grau 731 lackiert	Pintado Gris Smoky 731

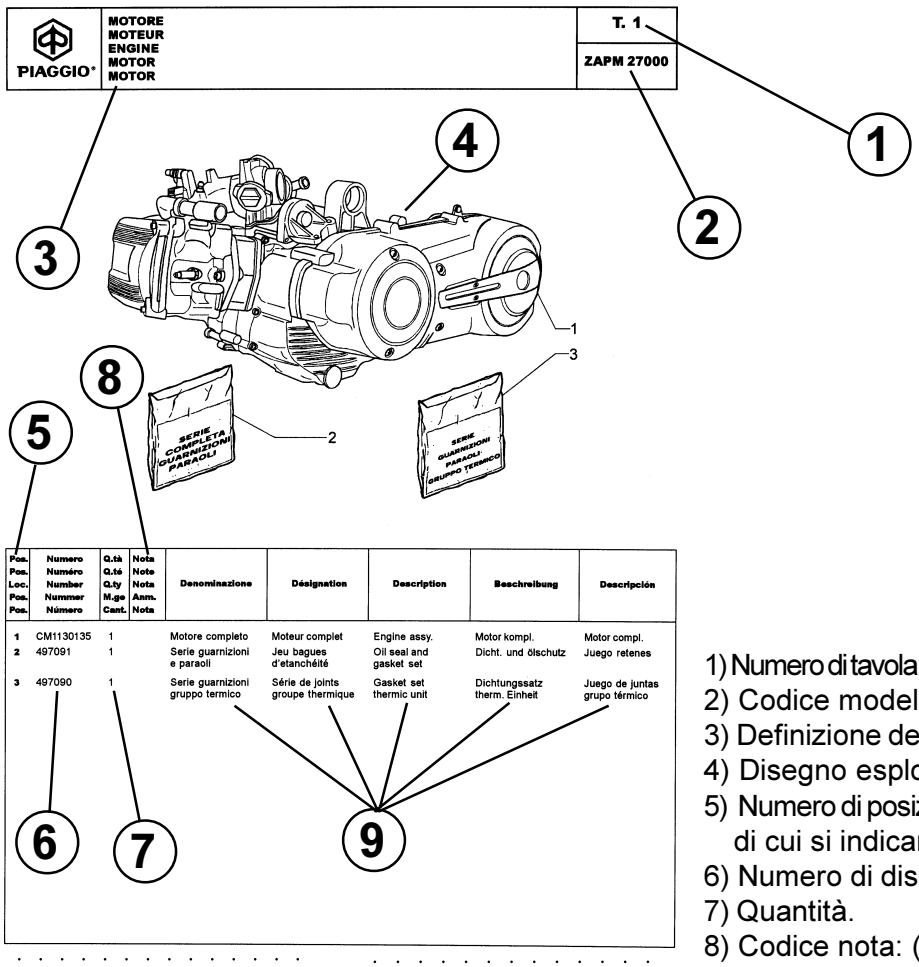

1) Numero di tavola: progressivo, serve ad identificare la tavola.
2) Codice modello.
3) Definizione dell'argomento trattato nella tavola.
4) Disegno esploso.
5) Numero di posizione: identifica il particolare dell'esploso di cui si indicano i dati caratteristici.
6) Numero di disegno dei particolare richiesto.
7) Quantità.
8) Codice nota: (indicata solo quando necessaria).
9) Denominazione.

1) Numéro de table: progressif, il sert à identifier la table.
2) Code modèle.
3) Définition du sujet traité dans la table.
4) Vue éclatée.
5) Numéro de position: il identifie la pièce de la vue éclatée dont on indique les données caractéristiques.
6) Numéro de dessin de la pièce demandée.
7) Quantité.
8) Code note: (indiqué seuiement si nécessaire).
9) Dénomination.

1) Table number: progressive, to identify the table.
2) Model code.
3) Definition of the issue in the table.
4) Exploded view.
5) Position number: identifier the part of the exploded view with specification.
6) Drawing number of the required part.
7) Quantity.
8) Note code: (it is shown only when it is necessary).
9) Denomination.

1) Tafelnummer: ansteigend, dient zur tafelidentifizierung
2) Modellkennziffer
3) Beschreibung des Themas, das in der Tafel behandelt wird
4) Abbildung Explosionsbild
5) Positionsnummer: kennzeichnet das Einzelteil aus der Abbildung, von dem die technischen Daten angegeben werden.
6) Nummer der Abbildung des gewünschten Einzelteils
7) Menge.
8) Kennziffer Anmerkung: (nur wenn notwendig angegeben)
9) Bezeichnung

1) Número de tabla: progresivo, para identificar la tabla.
2) Código módelo.
3) Definición del asunto tratado en la tabia.
4) Dibuio desarrollado.
5) Número de posición: identifica la pieza dei dibujo desarrollado de la cual se indican los datos caracterís ticos.
6) Número de dibujo de la pieza pedida.
7) Candidad.
8) Código nota: (indicada sólo si necesaria).
9) Denominación.

PIAGGIO®	ELENCO DELLE NAZIONI CON LE SIGLE D'IDIVIDUAZIONE RELATIVE LISTE DES PAYS AVEC SIGLE D'IDENTIFICATION LIST OF THE COUNTRIES WITH CONCERNING SYMBOLS LISTA DER LÄNDER MIT BETREFFENDEN ABKÜRZUNGEN ELENCO DE LAS NACIONES CON LAS SIGLAS DE INDIVID. CORRESPOND.	ZAPM 270W

AFGANISTAN AFGANISTAN AFGANISTAN AFGANISTAN	**AFG**	EGITTO EGYPTE EGYPT AGYPTEN	**ET**	ISOLE RIUNIONE LA REUNION REUNION ISLAND REUNION	**ISR**	REP. DOMINICANA REP. DOMINICAINE DOMINICAN REP. DOMINIKANISCHE REPUBLIK	**' OM**
ALTO VOLTA HAUTE-VOLTA VOLTAIC REP. OBER VOLTA	**AV**	EL SALVADOR EL SALVADOR SALVADOR EL SALVADOR	**ES**	ISRAELE ISRAÉL ISRAEL ISRAEL	**IL**	REP. ZAIRE RÉP. DU ZAIRE REP. OF ZAIRE REPUBLIK ZAIRE	**CGO**
ARABIA SAUDITA ARABIE SEOUDITE SAUDI ARABIA SAUDIARABIEN	**SA**	EQUADOR EQUATEUR ECUATOR EKUADOR	**EQ**	JUGOSLAVIA YUGOSLAVIE YUGOSLAVIA IUGOSLAVIEN	**YU**	RODI RHODES RHODES RHODHES	**R'**
ARGENTINA ARGENTINE ARGENTINA ARGENTINIEN	**RA**	FINLANDIA FINLANDE FINLAND FINNLAND	**SF**	KUWAIT KOWEIT KUWAIT KUWAIT	**. WT**	REUNION RÉUNION REUNION REUNION	**IR**
AUSTRALIA AUSTRALIE AUSTRALIA AUSTRALIEN	**AUS**	FORMOSA FORMOSE FORMOSA TAI-WAN	**RC**	KENIA KENYA KENYA KENIALAND	**EA.**	SENEGAL SENEGAL SENEGAL SENEGAL	**SN**
AUSTRIA AUTRICHE AUSTRIA ÖSTERREICH	**A**	FRANCIA FRANCE FRANCE FRANKREICH	**F**	LIBANO LIBAN LEBANON LIBANON	**RL**	SRILANKA SRILANKA SRI LANKA SRI LANKA	**L.**
BANGLADESH BANGLADESH BANGLADESH BANGLADESH	**BSH**	GIAPPONE JAPON JAPAN JAPAN	**-**	MALI MALI MALI REP. MALI	**RMM**	SVEZIA SUEDE SWEDEN SCHWEDEN	**S**
BELGIO BELGIQUE BELGIUM BELGIEN	**B**	GIORDANIA JORDANIE JORDAN JORDANIEN	**GR'**	MALTA MALTE MALTA MALTA	**M**	SUD AFRICA REP. SUDAFRICAINE SOUTH AFRICA SÜDAFRIKA	**ZA**
BERMUDA BERMUDES BERMUDA IS. BERMUDAS	**BRM**	GRECIA GRÈCE GREECE GRIECHENLAND	**GR**	MARTINICA MARTINIQUE MARTINIQUE MARTINIQUE	**MT**	SUDAN SOUDAN SUDAN SUDAN	**SU'**
BRASILE BRÉSIL BRAZIL BRASILIEN	**BR**	GUYANA FRANCESE GUYANEZ FRANCAISE FRENCH GUIANA FRANZÖSISCHE GUAYANA	**FG**	NORVEGIA NORVÈGE NORWAY NORWEGEN	**N**	TAHITI TAHITI TAHITI TAHITI	**TH**
CANADA CANADA CANADA KANADA	**C' N**	GUATEMALA GUATEMALA GUATEMALA GUATEMALA	**GT**	NOVA CALEDONIA NOUVELLE CALEDONIE NEW CALEDONIA NEUE KALEDONIEN	**F.**	TOGO TOGO TOGO REP. TOGO	**TG**
CEUTA CEUTA CEUTA CEUTA	**CE**	HONDURAS HONDURAS HONDURAS HONDURAS	**BH**	OLANDA HOLLANDE NETHERLANDS HOLLAND	**NL**	TUNISIA TUNISIE TUNISIA TUNESEIN	**TN**
CONGO CONGO CONGO REP. KONGO	**CGO**	IRAN IRAN IRAN IRAN	**IR**	PANAMA PANAMA PANAMA PANAMA	**PA**	VENEZUELA VENEZUELA VENEZUELA VENEZUELA	**VE**
COSTA D'AVORIO CÔTE D'IVOIRE IVORY COAST ELFENBEINKÜSTE	**CI**	IRLANDA IRLANDE REP. OF IRELAND IRLAND	**EIRE**	PARAGUAY PARAGUAY PARAGUAY PARAGUAY	**PY**	SINGAPORE SINGAPOUR SINGAPORE SINGAPUR	**SGP**
COSTARICA COSTARICA COSTARICA KOSTARICA	**CR**	INGHILTERRA ANGLETERRE ENGLAND ENGLAND	**GB**	PORTOGALLO PORTUGAL PORTUGAL PORTUGAL	**P**		
DANIMARCA DANEMARK DENMARK DÄNEMARK	**' .**	ISOLE MAURIZIO MAURITIUS MAURITIUS MAURITIUS	**MS**	PORTORICO PORTO-RICO PUERTO RICO PORTO RICO	**PR**		

T.1 PAG. 21 MOTORE - MOTEUR - ENGINE - MOTOR - MOTOR

T.2 PAG. 22 CARTER - CARTER - CRANKASE - KURBELGEHÄUSE - CARTER

T.3 PAG. 24 ALBERO MOTORE - VILEBREQUIN - CRANKSHAFT - KURBELWELLE - CIGÜENAL

T.4 PAG. 25 GRUPPO CILINDRO-PISTONE-SPINOTTO - ENSEMBLE CYLINDRE-PISTON-AXE DE PISTON - CYLINDER-PISTON-WRIST PIN, ASSY - GRUPPE ZYLINDER-KOLBEN-KOLBENBOLZEN - GRUPO CILINDRO-PISTON-EJE DE PISTON

T.5 PAG. 27 GR. TESTA-VALVOLE - ENSEMBLE CULASSE-SOUPAPES - HEAD-VALVES - EINHEIT KOPF-VENTIL - CULATA-VALVULAS

T.6 PAG. 29 GRUPPO SUPPORTO BILANCIERI - ENSEMBLESUPPORT BALANCIERS - ROCKER LEVERS SUPPORT-EINHEIT KIPPHEBELHÄLTER - SOPORTE BRAZO OSCILANTE

T.7 PAG. 30 COPERCHIO TESTA - COUVERCLE CULASSE - CYLINDER HEAD COVER - ZYLINDERKOPFABDECKUNG - TAPA CULATA

T.8 PAG. 31 PULEGGIA MOTRICE - POULIE MOTRICE - DRIVING PULLEY - TREIBENDE RIEMENSCHEIBE - POLEA MOTRIZ

T.9 PAG. 32 PULEGGIA CONDOTTA - POULIE ENTRAINEE - DRIVEN PULLEY - GETRIEBENE RIEMENSCHEIBEN - POLEA CONDUCIDA

T.10 PAG. 34 RAFFREDDAMENTO CARTER - REFROIDISSEMENT CARTER - CRANKCASE COOLING - KÜHLUNG KURBELGEHÄUSE - REFRIGERACION CARTER

T.11 PAG. 36 POMPA OLIO-AVVIAMENTO ELETTRICO - POMPE À HUILE-DÉMARRAGE ÉLECTIQUE - OIL PUMP-ELECTRIC STARTER - ÖLPUMPE-ELEKTRISCHER STARTER - BOMBA DE ACEITE-ARRANQUE ELECTRICO

T.12 PAG. 38 VOLANO MAGNETE - VOLANT MAGNETIQUE - FLYWHEEL MAGNETO - LICHTMASCHINE - VOLANTE MAGNETICO

T.13 PAG. 39 COPERCHIO VOLANO-FILTRO OLIO - CARTER VOLANT-FILTRE À HUILE - FLYWHEEL COVER-OIL FILTER - SCHWUNGRADDECKEL-ÖLFILTER - TAPA VOLANTE-FILTRO DE ACEITE

T.14 PAG. 42 COPERCHIO RIDUTTORE - COUVERCLE RÉDUCTEUR - REDUCTION UNIT COVER - DECKEL UNTERSETZUNGSGETRIEBE - TAPA REDUCTOR

T.15 PAG. 43 RACCORDO AMMISSIONE-CORPO FARFALLATO-INIETTORE - RACCORD D'ADMISSION-CORPS PAPILLON-INJECTEUR - UNION PIPE-THROTTLE BODY-INJECTOR - ANSAUGSTUTZEN-DROSSELKLAPPENGEHÄUSE-EINSPRITZDÜSE - RACORD ADMISIÓN-CUERPO CON MARIPOSA-INYECTOR

T.16 PAG. 44 MARMITTA - SILENCIEUX - SILENCER - AUSPUFFTOPF - SILENCIADOR

T.17 PAG. 46 FILTRO ARIA - FILTRE A AIR - AIR FILTER - LUFTFILTER - FILTRO DE AIRE

T.18 PAG. 47 TELAIO - CHASSIS - CHASIS - RAHMEN - CHASIS

T.19 PAG. 48 CAVALLETTI - BEQUILLES - CENTRAL STAND - STÄNDER - CABALLETES

T.20 PAG. 50 IMPIANTO RAFFERDDAMENTO - CIRCUIT DE REFROIDISSEMENT - COOLING SYSTEM - KÜHLANLAGE - INSTALACIÓN DE REFRIGERACIÓN

T.21 PAG. 52 SERBATOIO CARBURANTE - RESERVOIR CARBURANT - FUEL TANK - KRAFTSTOFFTANK - DEPÓSITO CARBURANTE

T.22 PAG. 53 CANISTER - CANISTER - CANISTER - CANISTER - CANISTER

T.23 PAG. 54 IMPIANTO ALIMENTAZIONE - CIRCUIT D'ALIMENTATION - SUPPLY SYSTEM - KRAFTSTOFFANLANGE - INSTALLACION DE ALIMENTACION

T.24 PAG. 55 SCUDO - BOUCLIER - SHIELD - SCHUTZSCHILD - ESCUDO

T.25 PAG. 57 PARABREZZA - PARE BRISE - WINDSCREEN - WINDSCHUTZSCHEIBE - PARABRISAS

T.26 PAG. 59 BAULETTO ANTERIORE - COFFRE A L'AVANT - FRONT TOP CASE - VORDERES GEPÄCKFACH - GUANTERA DELANTERA

T.27 PAG. 61 PARTE CENTRALE - PARTIE CENTRALE - CENTRAL PART - MITTLERER TEIL - PARTE CENTRAL

T.28 PAG. 62 PORTACASCO - PORTE-CASQUE - CASE-HELMET - STURZHELMBEHÄLTER - PORTA CASCO

T.29 PAG. 64 COPERTURE LATERALI-SPOILER - PROTECTIONS LATERALES-SPOILER - SIDE COVERINGS-SPOILER - SEITENABDECKUNGEN-SPOILER - CUBIERTAS LATERALES-SPOILER

T.30 PAG. 67 VANO RUOTA-PARAFANGO - LOGEMENT ROUE-GARDE BOUE - WHEEL COMPARTMENT-MUDGUARD - RADRAUM-KOTFLÜGEL - HUECO RUEDA-GUARDABARROS

T.31 PAG. 68 SELLA-BORSA ATTREZZI - SELLE-TROUSSE D'OUTILIS - SADDLE-TOOLS KIT- SATTEL-WERKZEUGTASCHE - SILLIN-BOLSA HERRAMIENTAS

T.32 PAG. 69 FORCELLA - FOURCHE - FORK - GABEL - HORQUILLA

T.33 PAG. 71 BRACCIO OSCILLANTE - BRAS OSCILLANT - SWINGING ARM - SCHWINGARM - BRAZO OSCILANTE

T.34 PAG. 73 AMMORTIZZATORI - AMORTISSEUS - DAMPERS - STOßDÄMPFER - AMORTIGUADORES

T.35 PAG. 74 COPERTURE MANUBRIO - PROTECTION GUIDON - HANDLEBAR COVERINGS - LENKSTANGENÜBERZUNG - FUNDAS MANILLAR

T.36 PAG. 75 GR. STRUMENTI - GROUPE DES INSTRUMENTS - INSTRUMENTS SET - INSTRUMENTENAGGREGAT - GRUPO INSTRUMENTOS

T.37 PAG. 76 DISPOSITIVI ELETTRICI-CLAXON - DISPOSITIFS ELECTRIQUES-CLAXON - ELECTRICAL DEVICES-ELECTRIC HORN - ELEKTRISCHE AUSRÜSTUNG-HUPE - DISPOSITIVOS ELÉCTRICOS-CLAXON

T.38 PAG. 77 MANUBRIO-POMPE FRENO - GUIDON-POMPE DU FREIN - HANDLEBAR-BRAKE PUMP - LENKSTANGE - BREMSPUMPEN - MANILLAR-BOMBAS DEL FRENO

T.39 PAG. 78 TUBAZIONI FRENO-PINZE FRENO - CANALISATION D'HUILE-PINCES FREIN - BRAKE PIPES-BRAKE CALIPERS - BREMSLEITUNGEN-BREMSZANGEN - TUBERÍAS DEL FRENO-PINZAS DEL FRENO

T.40 PAG. 80 FANALERIA ANTERIORE - FEUX AVANT - FRONT LIGHTS - VORDERBELEUCHTUNG - FAROS DELANTEROS

T.41 PAG. 81 FANALERIA POSTERIORE - FEUX ARRIERE - REAR LIGHTS - HINTERBELEUCHTUNG - FAROS TRASEROS

T.42 PAG. 82 COPERTURE POSTERIORE -PROTECTIONS ARRIERE - REAR COVERINGS - HINTERÜBERZÜGE - CUBIERTA TRASERAS

T.43 PAG. 83 DISPOSITIVI ELETTRICI-BATTERIA - DISPOSITIFS ELECTRIQUES-BATTERIE - ELECTRICAL DEVICE-BATTERY - ELEKTRISCHE AUSRÜSTUNG-BATTERIE - DISPOSITIVOS ELECTRICOS-BATERÍA

T.44 PAG. 85 DISPOSITIVI ELETTRICI - DISPOSITIFS ELECTRIQUES - ELECTRICAL DEVICE - ELEKTRISCHE AUSRÜSTUNG - DISPOSITIVOS ELECTRICOS

T.45 PAG. 86 GR. CAVETTI PRINCIPALE - GROUPE PRINCIPAL DES CÂBLES - MAIN CABLES UNIT - HAUPTLITZENAGGREGAT - GRUPO CABLES PRINCIPAL

T.46 PAG. 87 SERRATURE - SERRURES - LOCKS - SCHLIEßVORRICHTUNG - CERRADURAS

T.47 PAG. 89 RUOTA ANTERIORE - ROUE AV. - FRONT WHEEL - VORDERRAD - RUEDA DELANTERA

T.48 PAG. 90 RUOTA POSTERIORE - ROUE AR. - REAR WHEEL - HINTERRAD - RUEDA TRASERA

Numero Numéro Number Nummer Número	N. Tavola Nr. Planche Drawing No. Zeichnung Nr. N. Tabla	Pos. Pos. Loc. Pos. Pos.
000097	12	12
000267	3	6
000674	2	18
003038	18	16
003056	18	19
003056	22	16
006635	33	4
006647	2	10
006966	39	13
008375	41	15
011109	32	3
012528	23	4
012543	38	9
012554	43	25
012770	28	5
012789	48	3
013092	20	13
013092	25	12
013777	29	16
013777	41	16
013880	19	5
013880	30	3
013880	43	2
013950	18	4
013950	42	9
013962	33	15
015330	38	8
015341	16	7
015597	44	6
015715	12	11
015715	13	22
015715	23	3
015727	40	5
015759	43	1
015759	43	8
015792	39	4
016404	45	8
016405	43	9
016406	11	19
016406	18	5
016406	43	3
016408	18	13
016670	10	18
016670	28	19
016670	31	2
018536	28	22
018538	6	8
018575	12	1
018640	42	8
018644	45	7
020003	43	23
020008	34	8

Numero Numéro Number Nummer Número	N. Tavola Nr. Planche Drawing No. Zeichnung Nr. N. Tabla	Pos. Pos. Loc. Pos. Pos.
020106	18	6
020108	18	12
020206	25	8
030059	18	10
030059	18	3
031086	11	18
031086	39	16
031088	18	18
031088	19	13
031088	19	6
031088	22	15
031091	21	8
031092	17	7
031117	18	8
031119	18	14
031119	19	20
031153	19	16
031153	33	24
063435	5	9
071633	28	14
071671	43	22
078307	21	11
080341	43	16
090854	22	12
090854	43	5
109960	19	26
122637	12	7
122675	39	21
127927	39	18
145298	22	7
145298	23	6
145298	41	2
145298	46	24
145298	47	4
178149	33	8
178790	38	10
178790	4	12
179326	33	7
181351	29	32
181351	30	10
181746	41	7
181747	41	9
191189	19	9
194423	48	18
195482	21	10
217163	30	4
219277	22	14
223605	38	11
227199	33	10
227983	35	17
232108	19	1
232108	19	14

Numero Numéro Number Nummer Número	N. Tavola Nr. Planche Drawing No. Zeichnung Nr. N. Tabla	Pos. Pos. Loc. Pos. Pos.
232108	33	6
232108	34	5
235661	19	25
237553	13	23
239388	2	8
246976	48	6
252099	10	19
252099	28	20
252099	31	5
252099	42	6
252420	26	4
252945	45	3
253293	15	7
253327	40	3
253937	46	2
254485	17	8
254485	20	20
254485	21	5
254485	24	6
254485	28	11
254485	28	18
254485	29	20
254485	40	6
255638	25	18
256856	15	8
257301	17	5
257302	17	9
257614	26	18
258146	17	4
258160	21	4
258249	24	4
258249	26	19
258249	27	12
258249	28	9
258249	29	10
258249	29	19
258249	29	26
258249	35	8
258249	42	3
258904	20	16
259151	13	12
259206	28	21
259348	10	14
259348	46	23
259349	26	26
259349	29	22
259349	29	30
259349	35	15
259372	35	13
259830	25	9
259830	30	8
259830	31	6

Numero Numéro Number Nummer Número	N. Tavola Nr. Planche Drawing No. Zeichnung Nr. N. Tabla	Pos. Pos. Loc. Pos. Pos.
259832	21	3
261319	33	14
261319	33	9
265451	39	12
265808	28	24
268158	34	9
268596	20	24
269755	14	14
270216	21	9
270793	10	15
270793	10	3
270793	20	8
270793	27	11
270793	29	27
270793	35	16
270793	36	4
270793	41	11
270793	41	17
271147	47	5
271434	38	4
271452	38	1
271453	38	1
271740	47	1
271891	17	6
271891	20	14
271891	24	12
271891	25	19
272426	19	4
272836	20	22
272836	24	9
272836	26	22
272836	28	6
272836	29	8
272836	30	6
272836	42	4
273288	20	12
273288	25	14
273779	23	5
274350	39	20
285536	11	16
285846	5	1
288245	39	19
288245	4	11
288474	11	20
289731	13	36
289731	15	4
290860	45	3
292022	41	13
292507	45	3
292823	28	12
293154	28	13
293256	45	3

Numero Numéro Number Nummer Número	N. Tavola Nr. Planche Drawing No. Zeichnung Nr. N. Tabla	Pos. Pos. Loc. Pos. Pos.
293845	43	17
294341	37	1
294353	40	4
294770	28	17
295486	24	3
295788	19	8
295789	19	7
296456	31	9
296748	19	21
297275	26	6
297446	28	23
297498	24	16
297498	24	8
297498	26	5
297498	27	7
297498	29	21
298581	46	4
298594	46	9
298731	46	7
298838	46	8
299689	27	10
299972	26	24
299972	46	15
327187	47	8
351782	20	10
411311	13	6
411311	2	6
414834	10	6
414837	11	11
414837	13	32
414837	15	5
414838	13	31
414838	2	21
414838	39	15
430045	5	10
433477	11	6
433800	13	28
434541	37	6
434541	4	10
434541	43	26
434541	5	13
436438	5	4
436919	43	18
438073	7	1
463195	21	12
478115	2	20
478895	13	37
479132	17	13
479515	12	2
479986	13	34
479986	13	8
482290	39	27

Numero Numéro Number Nummer Número	N. Tavola Nr. Planche Drawing No. Zeichnung Nr. N. Tabla	Pos. Pos. Loc. Pos. Pos.
484034	2	7
484654	6	2
484819	6	1
485084	13	30
485703	14	13
485912	2	15
486075	13	15
486216	13	2
487845	17	2
487948	14	12
496404	43	7
497031	38	14
497032	38	15
497090	1	3
497091	1	2
497394	39	3
497396	39	6
497397	36	3
497404	31	7
497405	31	8
560136	47	6
560173	25	15
56122R	39	28
56167R	39	2
563728	48	17
564446	47	2
564447	47	9
564448	47	11
564489	47	15
564491	47	10
564611	33	11
564784	39	25
57311R	20	18
573454	20	1
573530	28	2
574260	29	14
5743990095	25	11
575021	26	12
575062	26	11
575249	10	12
575249	10	16
575249	24	13
575249	29	24
575249	29	25
575249	40	7
575304	21	13
575357	18	15
575540	20	11
575541	20	3
5755444	18	11
575550	28	8
575551	28	1

Numero Numéro Number Nummer Número	N. Tavola Nr. Planche Drawing No. Zeichnung Nr. N. Tabla	Pos. Pos. Loc. Pos. Pos.
575558000P	27	1
575559000P	27	2
57556100D9	24	1
57556100EB	24	1
57556800E8	42	2
575572000C	29	15
575573000C	29	15
575574000P	26	16
575575000P	26	16
57557700E8	29	29
575597	29	5
575598	29	5
575604	27	4
575605	27	6
575606	27	3
575607	26	8
575608	26	7
575610	26	9
575810	46	5
575819	26	25
575844	26	17
575845	26	17
575846	26	14
575847	27	9
575849	26	13
575860	29	12
575863	26	23
575873	21	7
576061	31	4
57609800E8	42	5
576245	28	15
576301	20	23
576454	22	9
576468	22	1
576542	23	9
576544	21	1
576546	23	8
576552	46	6
576565	25	13
576688	23	7
576702	29	33
576704	35	18
576708	31	10
5767574	33	23
57676100E8	29	28
57676300E8	29	28
576766	20	9
576816	26	27
576835000P	35	1
576836	25	17
576847000P	26	2
576860	22	3

Numero Numéro Number Nummer Número	N. Tavola Nr. Planche Drawing No. Zeichnung Nr. N. Tabla	Pos. Pos. Loc. Pos. Pos.
576953	28	25
577103	25	5
577104	25	5
577107	25	20
577108	25	3
577110	25	6
577128	46	18
577129	46	19
577131	46	14
577149	25	3
577194	46	11
577237	25	4
577249000C	29	17
57726500N3	25	2
577309	28	4
577313	43	10
577620	26	21
577620	46	17
577752000P	26	1
577790	21	2
577816	46	3
577861	26	10
57799600E8	29	1
57799700E8	29	2
57799800E8	29	2
58002R	44	5
58014R	47	3
580387	37	9
58040R	12	3
58057R	37	10
58058R	37	3
580653	45	10
581142	30	7
581175	35	10
581190	45	9
581191	45	6
581411	37	7
581441	37	5
581443	41	12
58149300A7	35	3
581494000P	35	7
581496000P	35	5
581497000P	35	6
581647	41	8
581648	41	6
581653	41	10
581855	36	5
581859	43	15
5818804	38	13
581957	35	4
582034	38	5
582136	40	2

Numero Numéro Number Nummer Número	N. Tavola Nr. Planche Drawing No. Zeichnung Nr. N. Tabla	Pos. Pos. Loc. Pos. Pos.
582141	44	4
582163	37	8
582625	19	2
582633	19	10
582650	45	4
582660	37	4
582690	43	11
582699	19	23
582700	19	22
582756	19	12
582767	38	2
582768	38	3
582787	32	4
582893	19	24
582906	43	19
582930	45	3
582951	46	1
582990	46	12
583155	19	3
583161	19	19
583162	19	17
583236	43	24
583282	45	2
583282	45	5
583283	43	13
583480	19	15
583529	43	12
583575	38	12
583584	13	35
583973	13	38
584083	30	9
584084	30	9
584121	46	16
584124	29	31
584125	29	31
584332	24	10
584370	36	1
584533	44	1
584646	43	21
584739	44	3
5847685	5	12
584826	28	16
584843	11	17
584884	42	7
584969	45	1
597033	39	29
597178	34	2
597179	34	3
597262	33	17
597339	47	14
597340	47	14
597390	48	16

Numero Numéro Number Nummer Número	N. Tavola Nr. Planche Drawing No. Zeichnung Nr. N. Tabla	Pos. Pos. Loc. Pos. Pos.
597395	39	17
597519T	47	12
597520	48	11
597528	48	12
597564	48	10
597565	48	2
597565	48	9
597679	47	13
597679	48	13
597833	33	13
597836	33	12
597837	33	18
597838	33	20
597839	33	2
597844	33	3
597868	33	22
598022	48	1
598060	39	11
598068	33	16
598070	48	14
598076	33	1
598219000P	35	2
5982615	32	1
598288	30	2
59828900D9	30	1
59828900EB	30	1
598351	38	6
598919	39	9
598930	34	1
5990445	19	18
599065	48	7
599208	16	1
599315	47	7
599499	32	5
599501	32	13
599502	32	16
599503	32	15
599504	32	10
599505	32	17
599509	32	14
599510	32	11
599511	32	7
599512	32	8
599513	32	9
599514	39	24
599515	39	26
599545	39	23
599549	32	6
599550	32	6
599559	34	6
599564	34	4
599572	32	12

Numero Numéro Number Nummer Número	N. Tavola Nr. Planche Drawing No. Zeichnung Nr. N. Tabla	Pos. Pos. Loc. Pos. Pos.
599582	48	7
599629	32	18
600161	33	5
600876	39	22
601059	19	11
601118	32	2
601166	32	19
602664M	25	7
62000300E8	29	4
620105	20	6
620106	22	11
620220	20	17
620333	26	29
620334	26	30
620335	26	28
620415	46	13
62042500D9	29	3
62042500EB	29	3
62042600D9	29	3
62042600EB	29	3
62043100D9	24	2
62043100EB	24	2
62043200D9	42	1
62043200EB	42	1
620433	24	15
620434	24	14
620661	24	15
620662	24	14
620737	20	2
620779	20	15
620830	29	7
620833	24	18
6208695	18	17
620871	20	21
620876	10	17
6209295	18	1
621030	20	19
6210465	18	2
621052	29	9
621053	29	9
621116	28	7
621117	28	3
62134600E8	30	5
621507	27	8
621616	23	2
621617	23	1
621940	25	16
622307	25	1
62236800E8	29	4
622375	22	6
622376	22	10
635096	31	3

Numero Numéro Number Nummer Número	N. Tavola Nr. Planche Drawing No. Zeichnung Nr. N. Tabla	Pos. Pos. Loc. Pos. Pos.
638536	41	3
638635	43	14
638707	40	1
638708	37	2
638712	41	1
638713	24	17
638714	24	17
638727	41	4
638728	41	5
63873200E8	41	14
638733	43	6
638734	36	2
638834	46	25
638835	46	26
709037	33	21
709047	39	10
709047	39	5
709047	39	7
709047	48	5
709646	33	25
812592	39	14
825051	13	26
825176	9	14
825233	2	17
825237	9	8
825238	2	16
825239	9	7
825281	11	4
825381	8	4
825382	9	2
825384	9	11
825385	9	13
825431	12	13
825649	2	23
825665	13	7
825667	10	7
825725	12	9
825737	11	1
825758	48	4
825763	9	19
82580R	13	5
826000	15	6
8260275	6	16
8260285	6	3
826033	11	14
826103	5	3
826165	11	15
826256	5	5
826275	35	11
82627R	9	1
82656R	2	4
82658R	13	4

Numero Numéro Number Nummer Número	N. Tavola Nr. Planche Drawing No. Zeichnung Nr. N. Tabla	Pos. Pos. Loc. Pos. Pos.
82659R	14	10
82660R	14	8
82668R	2	9
826974	48	15
82699R	11	12
827018	5	14
827085	2	13
827116	12	6
827116	9	16
82736R	12	4
82737R	12	8
827706	4	6
827707	4	5
827820	4	4
827882	11	10
827884	13	13
827886	11	2
827889	11	5
827929	13	29
827951	2	2
827953	5	18
827991	6	5
828109	12	10
828114	2	5
828115	14	2
828116	4	3
828118	11	9
828185	16	13
828194	16	12
828205	3	1
828321	5	6
828322	5	6
828338	15	9
828341	17	10
828394	13	10
828396	5	2
828399	17	3
828646	5	11
828800	46	10
828817	43	20
828863	44	2
828909	2	3
828911	14	15
828922	2	22
828930	13	27
828974	9	9
828978	9	5
828984	9	18
829006	17	12
8290405	13	33
829047	13	21
829071	6	7

Numero Numéro Number Nummer Número	N. Tavola Nr. Planche Drawing No. Zeichnung Nr. N. Tabla	Pos. Pos. Loc. Pos. Pos.
829097	6	13
829121	43	4
829195	2	11
829198	6	6
829201	14	9
829203	8	9
829205	8	8
829206	14	6
829211	6	17
829232	8	11
829247	6	14
829251	8	10
829252	6	9
829254	13	39
829287	6	15
8293655	6	4
829486	13	24
829557	13	3
829661	13	25
829693	8	13
829752	3	8
829808	9	3
829981	7	1
830008	5	7
830012	3	5
830056	27	5
830061	11	8
830061	15	3
830064	11	7
830112	3	7
830129	11	3
830129	3	4
830198	14	7
830248	7	3
830249	7	5
830275	4	8
830276	4	8
830277	4	8
830278	5	15
830298	16	14
8304275	15	2
830819	7	4
830820	7	2
830886	12	14
830899	8	5
830901	8	3
831039	5	8
831098	9	10
831153	6	11
8311615	6	12
831167	6	10
8320525	14	1

Numero Numéro Number Nummer Número	N. Tavola Nr. Planche Drawing No. Zeichnung Nr. N. Tabla	Pos. Pos. Loc. Pos. Pos.
8321174	11	13
832130	2	12
8322150001	3	3
8322150002	3	3
832446	16	19
8324875	14	3
832697	8	7
832738	8	6
832770	4	7
832774	9	4
832783	5	17
832808	9	6
832811	4	1
8328120001	4	2
8328120002	4	2
8328120003	4	2
8328120004	4	2
833291	8	1
833314	10	8
833318	10	4
833320	10	5
833321	10	13
833417	16	15
833513	2	19
833569	16	18
833663	10	9
833664	10	10
833701	2	14
833717	13	11
833910	16	3
834038	16	8
834039	16	6
834040	16	5
834041	16	11
834046	16	17
8342335	14	4
834254	4	9
834304	8	12
834401	15	1
834484	13	18
834643	16	10
834770	14	5
834951	16	4
840062	13	19
840172	17	1
840277	10	2
840319	9	17
840320	9	20
840370	16	16
840439	10	21
840569	16	2
8405775	9	12

Numero Numéro Number Nummer Número	N. Tavola Nr. Planche Drawing No. Zeichnung Nr. N. Tabla	Pos. Pos. Loc. Pos. Pos.
840733	14	11
840826	13	17
840893	12	5
841030	48	8
841101	13	14
841102	13	41
841150	13	9
841456	3	2
841490	10	20
8415115	13	1
842175	8	2
8423545	10	1
842355	10	11
842559	9	15
842602	33	19
8439945	16	9
844483	34	7
844483	39	8
CM001903	20	4
CM001904	13	20
CM001904	20	5
CM001907	13	40
CM001914	22	13
CM001914	22	5
CM001915	20	7
CM001915	5	16
CM001917	13	16
CM002910	17	11
CM002912	22	4
CM006001	25	10
CM007503	22	18
CM007504	22	2
CM007515	22	17
CM007515	22	8
CM0102024	18	9
CM0102034	18	7
CM011101	29	6
CM011901	21	6
CM012805	46	20
CM012809	46	21
CM012812	26	3
CM017408	35	9
CM017409	29	13
CM017409	35	14
CM017410	24	5
CM017410	26	15
CM017410	26	20
CM017410	28	10
CM017410	29	11
CM017410	29	18
CM017410	29	23
CM017410	42	10

Numero Numéro Number Nummer Número	N. Tavola Nr. Planche Drawing No. Zeichnung Nr. N. Tabla	Pos. Pos. Loc. Pos. Pos.
CM017418	35	12
CM018601	24	11
CM018602	24	11
CM020301	31	1
CM023704	46	22
CM02590100D9	24	7
CM02590100EB	24	7
CM02590200D9	24	7
CM02590200EB	24	7
CM072501	39	1
CM072502	39	1
CM072601	38	7
CM072602	38	7
CM1130135	1	1
CM1145175001	2	1
CM1145175002	2	1
CM1145175003	2	1
CM1145175004	2	1

Numero Numéro Number Nummer Número	N. Tavola Nr. Planche Drawing No. Zeichnung Nr. N. Tabla	Pos. Pos. Loc. Pos. Pos.

TAV. 1

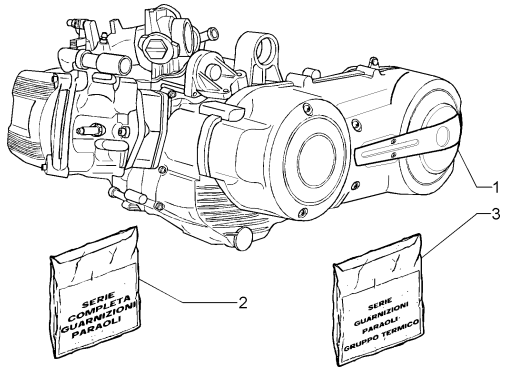

TAV. 2

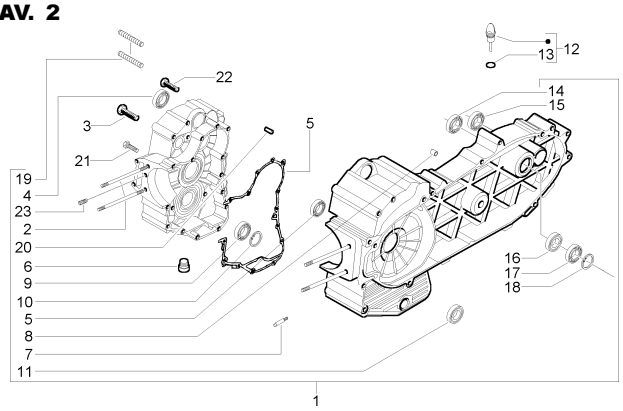

TAV. 3

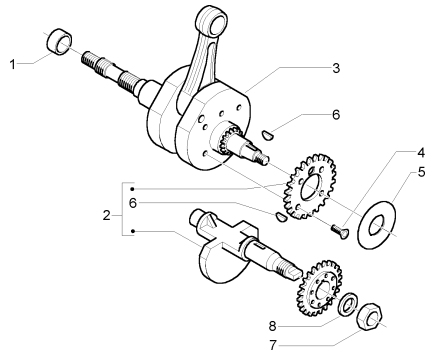

TAV. 4

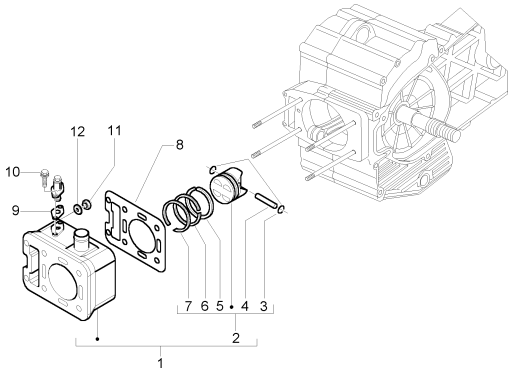

TAV. 5

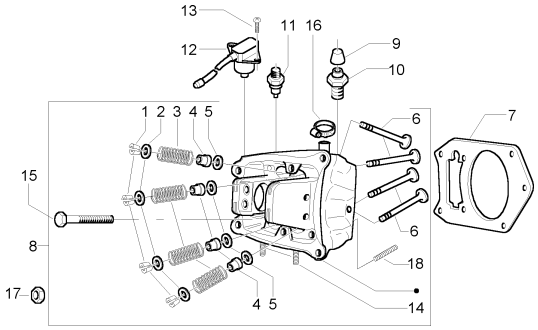

TAV. 6

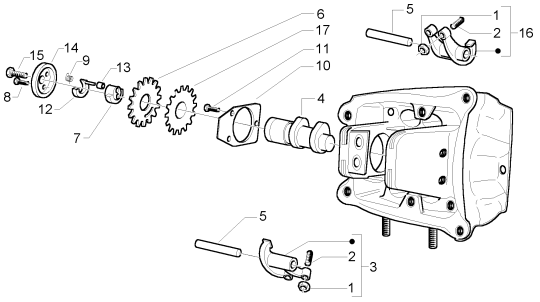

TAV. 7

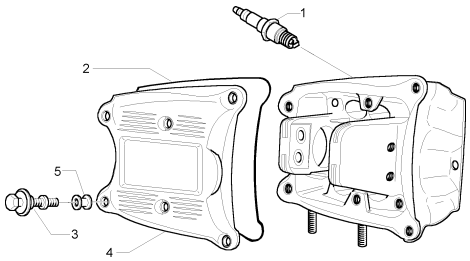

TAV. 8

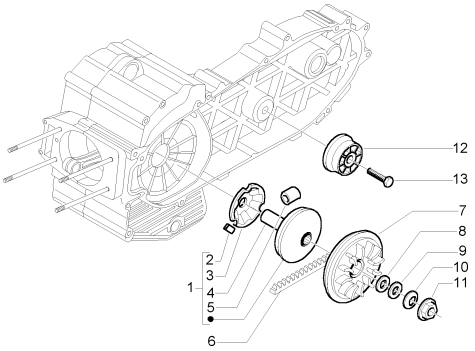

TAV. 9

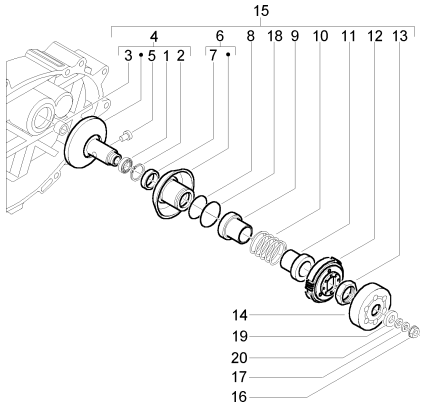

TAV. 10

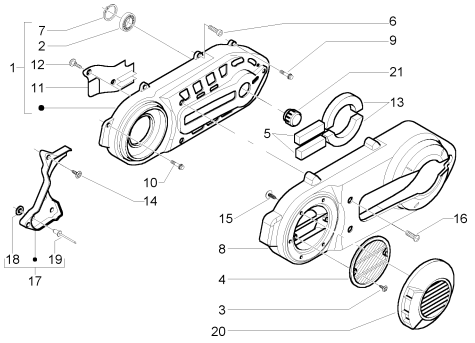

TAV. 11

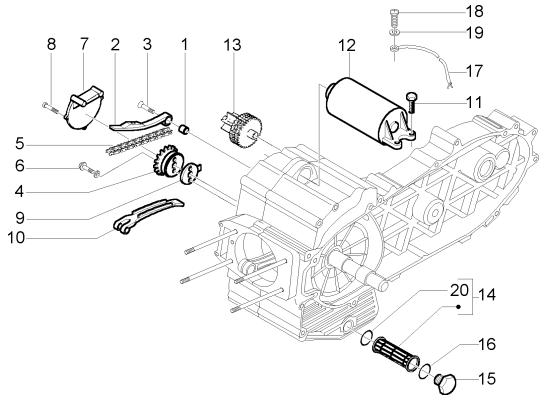

TAV. 12

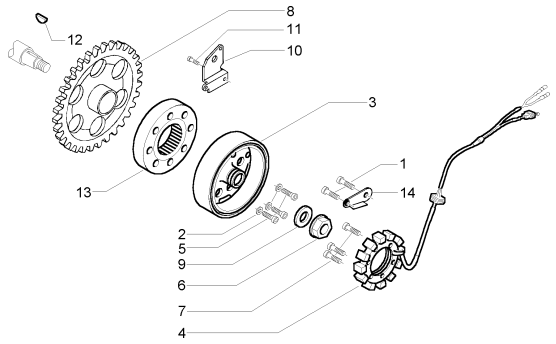

TAV. 13

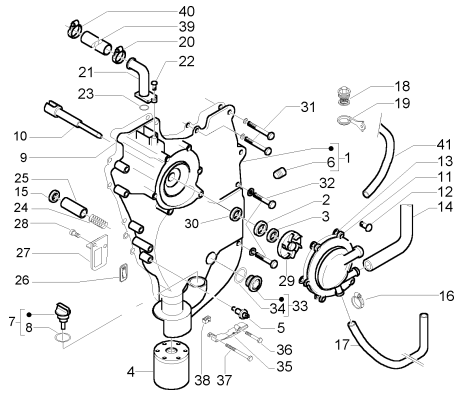

TAV. 14

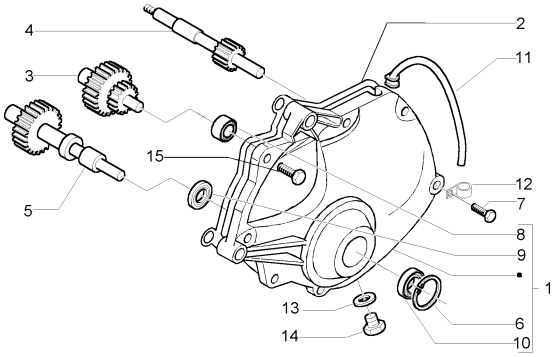

TAV. 15

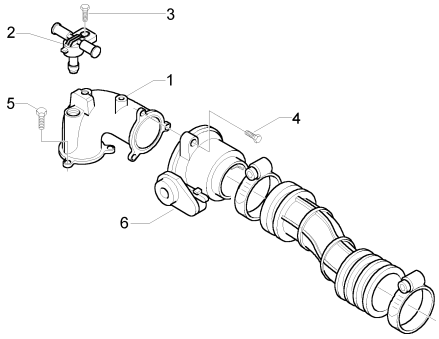

TAV. 16

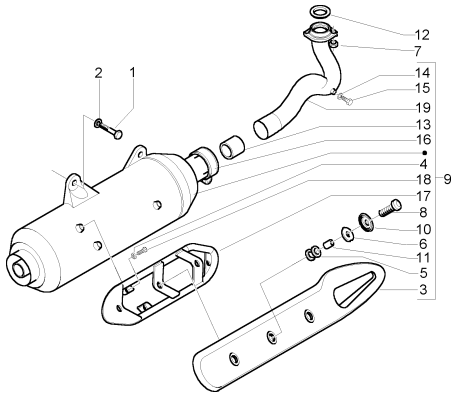

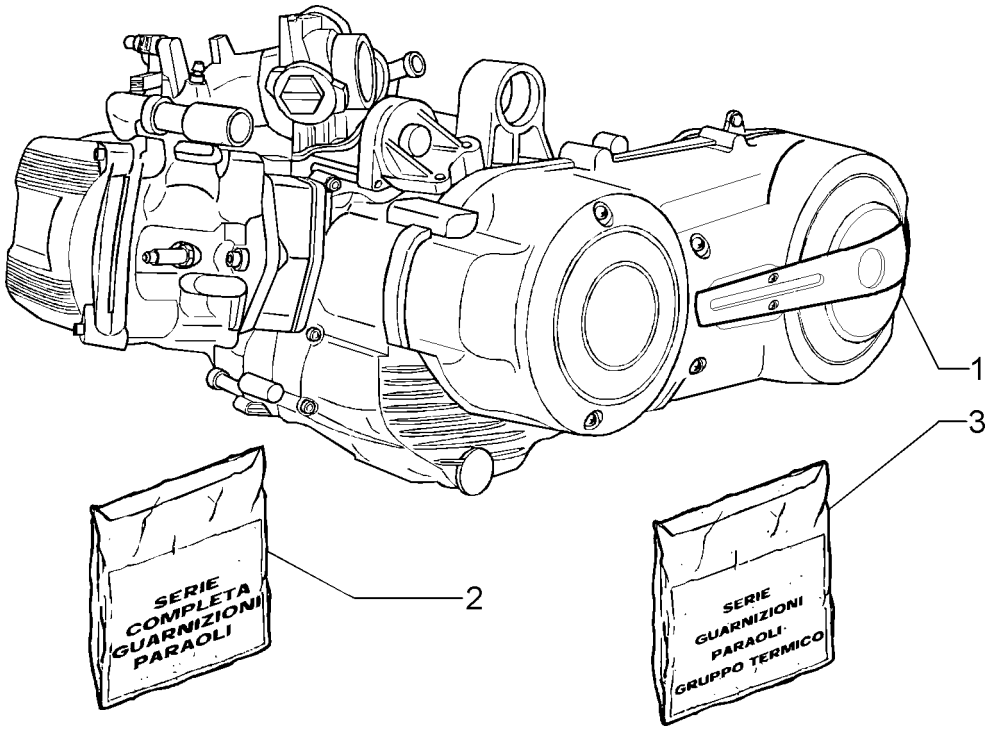

Pos. Pos. Loc. Pos. Pos.	Numero Numéro Number Nummer Número	Q.tà Q.té Q.ty M.ge Cant.	Nota Note Nota Anm. Nota	Denominazione	Désignation	Description	Beschreibung	Descripción
1	CM1130135	1		Motore completo	Moteur complet	Engine assy.	Motor kompl.	Motor compl.
2	497091	1		Serie guarnizioni e paraoli	Jeu bagues d'etanchéité	Oil seal and gasket set	Dicht. und ölschutz	Juego retenes
3	497090	1		Serie guarnizioni gruppo termico	Série de joints groupe thermique	Gasket set thermic unit	Dichtungssatz therm. Einheit	Juego de juntas grupo térmico

PIAGGIO®	CARTER CARTER CRANKASE KURBELGEHÄUSE CARTER	T. 2 ZAPM 270W

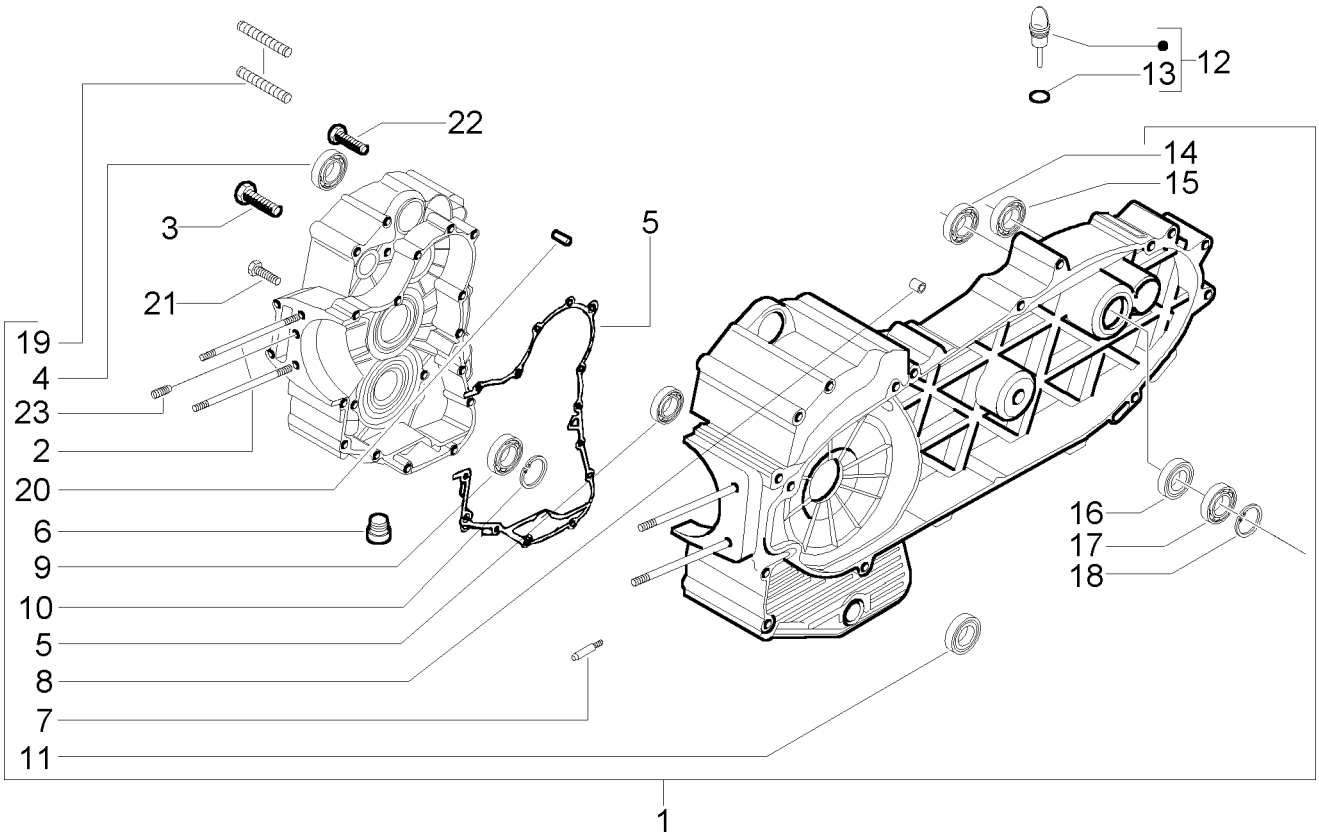

Pos. Pos. Loc. Pos. Pos.	Numero Numéro Number Nummer Número	Q.tà Q.té Q.ty M.ge Cant.	Nota Note Nota Anm. Nota	Denominazione	Désignation	Description	Beschreibung	Descripción
1	CM11451750011		FCl	Carter motore	Carter moteru	Crankcase	Kurbekgrhäuse	Carter motor
1	CM11451750021		FC2	Carter motore	Carter moteru	Crankcase	Kurbekgrhäuse	Carter motor
1	CM11451750031		FC3	Carter motore	Carter moteru	Crankcase	Kurbekgrhäuse	Carter motor
1	CM11451750041		FC4	Carter motore	Carter moteru	Crankcase	Kurbekgrhäuse	Carter motor
2	827951	4		Prigioniero	Goujon	Stud	Stiftschraube	Espárrago
3	828909	12		Vite	Vis	Screw	Schraube	Tornillo
4	82656R	2		Cuscinetto	Roulement	Bearing	Lager	Cojinete
5	828114	1	0,4	Guarnizione	Joint	Gasket	Dichtung	Empaque
6	411311	2		Tappo	Bouchon	Plug	Verschluß	Tapa
7	484034	1		Ugello	Buse	Nozzle	Düse	Boquilla
8	239388	4		Spina	Goujon	Dowel	Zapfen	Pasador
9	82668R	2		Cuscinetto	Roulement	Bearing	Lager	Cojinete
10	006647	1		Anello elastico	Circlips	Circlip	Sprengring	Anillo elastico
11	829195	1		Paraolio	Pare-huile	Oil seal	Dichtring	Sello de lub.
12	832130	1		Asta olio	Jauge niveau d'huile	Oil dipstick	Ölmeßstab	Varilla
13	827085	1		Guarnizione	Joint	Packing	Dichtung	Junta
14	833701	1		Cuscinetto	Palier	Bearing	Radiallager	Cojinete
15	485912	1		Cuscinetto	Palier	Bearing	Radiallager	Cojinete
16	825238	1		Anello tenuta	Bague d'étanchéite	Oil seal	Dichtring	Reten de ac.
17	825233	1		Cuscinetto	Palier	Radial	Radiallager	Cojinete

PIAGGIO®	CARTER CARTER CRANKASE KURBELGEHÄUSE CARTER	T. 2 ZAPM 270W

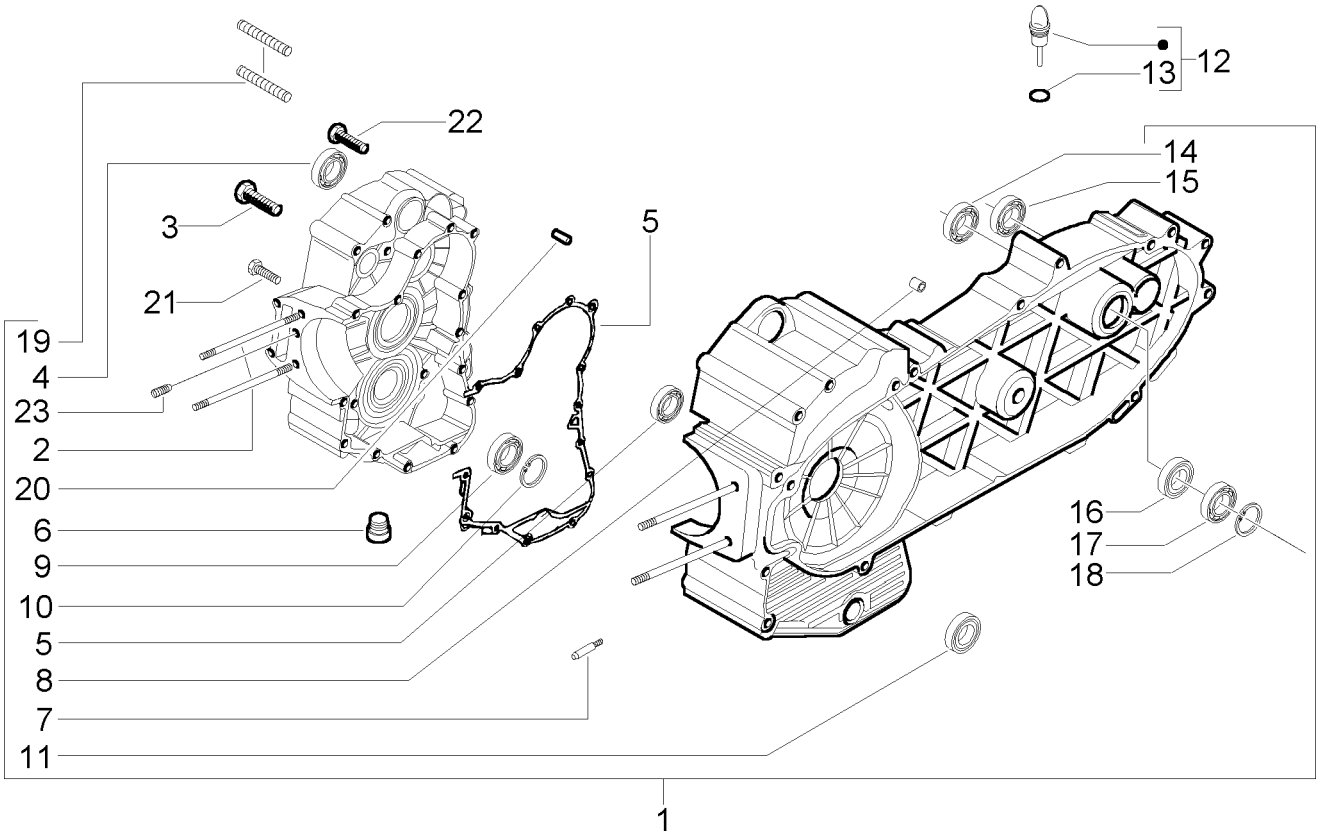

Pos. Pos. Loc. Pos. Pos.	Numero Numéro Number Nummer Número	Q.tà Q.té Q.ty M.ge Cant.	Nota Note Nota Anm. Nota	Denominazione	Désignation	Description	Beschreibung	Descripción
18	000674	1		Anello elastico	Circlips	Circlip	Sprengring	Anillo elastico
19	833513	2		Prigioniero	Goujon	Stud	Stiftschraube	Espárrago
20	478115	4		Grano	Goujon	Dowel	Stift	Clavija
21	414838	1		Vite	Vis	Screw	Schraube	Tornillo
22	828922	1		Vite	Vis	Screw	Schraube	Tornillo
23	825649	1		Ugello	Buse	Nozzle	Düse	Boquilla

PIAGGIO®	ALBERO MOTORE VILEBREQUIN CRANKSHAFT KURBELWELLE CIGÜENAL	T. 3 ZAPM 270W

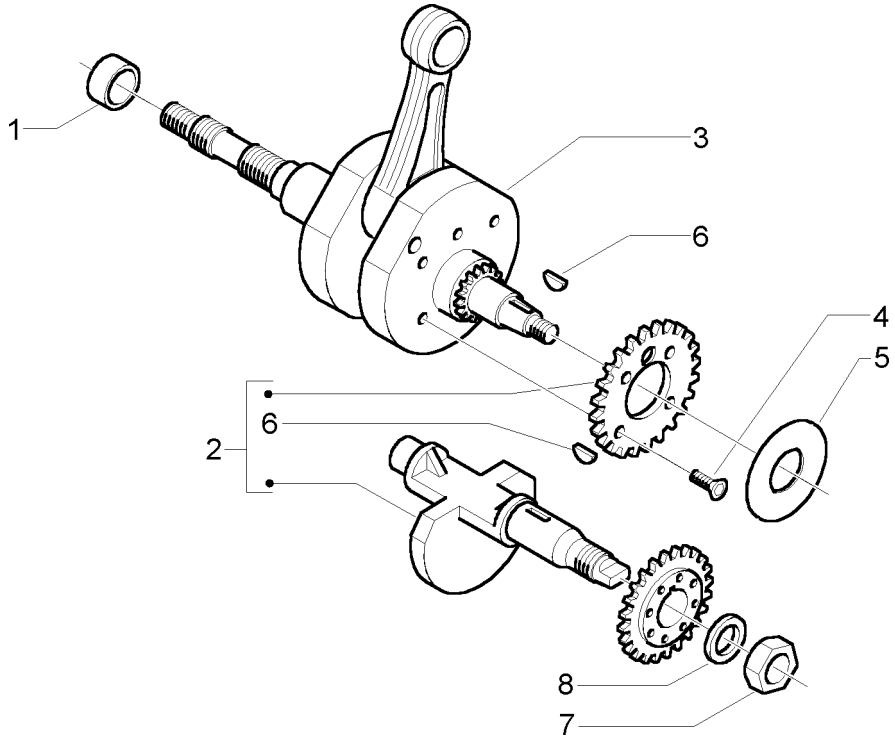

Pos. Pos. Loc. Pos. Pos.	Numero Numéro Number Nummer Número	Q.tà Q.té Q.ty M.ge Cant.	Nota Note Nota Anm. Nota	Denominazione	Désignation	Description	Beschreibung	Descripción
1	828205	1		Distanziale	Entretoise	Spacer	Distanzstück	Distanciador
2	841456	1		Kit contralbero ingranaggi	Kit contre-arbre engrenages	Countershaft-gears kit	Bausatz Getriebezwischenw.	Kit contraeje engranajes
3	8322150001	1	FC1	Albero motore	Arbre moteur	Crankshaft	Kurbelwelle	Cigueñale completo
3	8322150002	1	FC2	Albero motore	Arbre moteur	Crankshaft	Kurbelwelle	Cigueñale completo
4	830129	4		Vite	Vis	Screw	Schraube	Tornillo
5	830012	1		Rasamento	Epaulement	Shim	Ausgleichsscheibe	Ras.
6	000267	2		Chiavetta	Clavette	Key	Keil	Chaveta
7	830112	1		Dado	Ecrou	Nut	Mutter	Tuerca
8	829752	1		Distanziale	Entretoise	Spacer	Distanzstück	Distanciador

PIAGGIO®	GRUPPO CILINDRO-PISTONE-SPINOTTO ENSEMBLE CYLINDRE-PISTON-AXE DE PISTON CYLINDER-PISTON-WRIST PINI ASSY GRUPPE ZYLINDER-KOLBEN-KOLBENBOLZEN GRUPO CILINDRO-PISTON-EJE DE PISTON	T. 4 ZAPM 270W

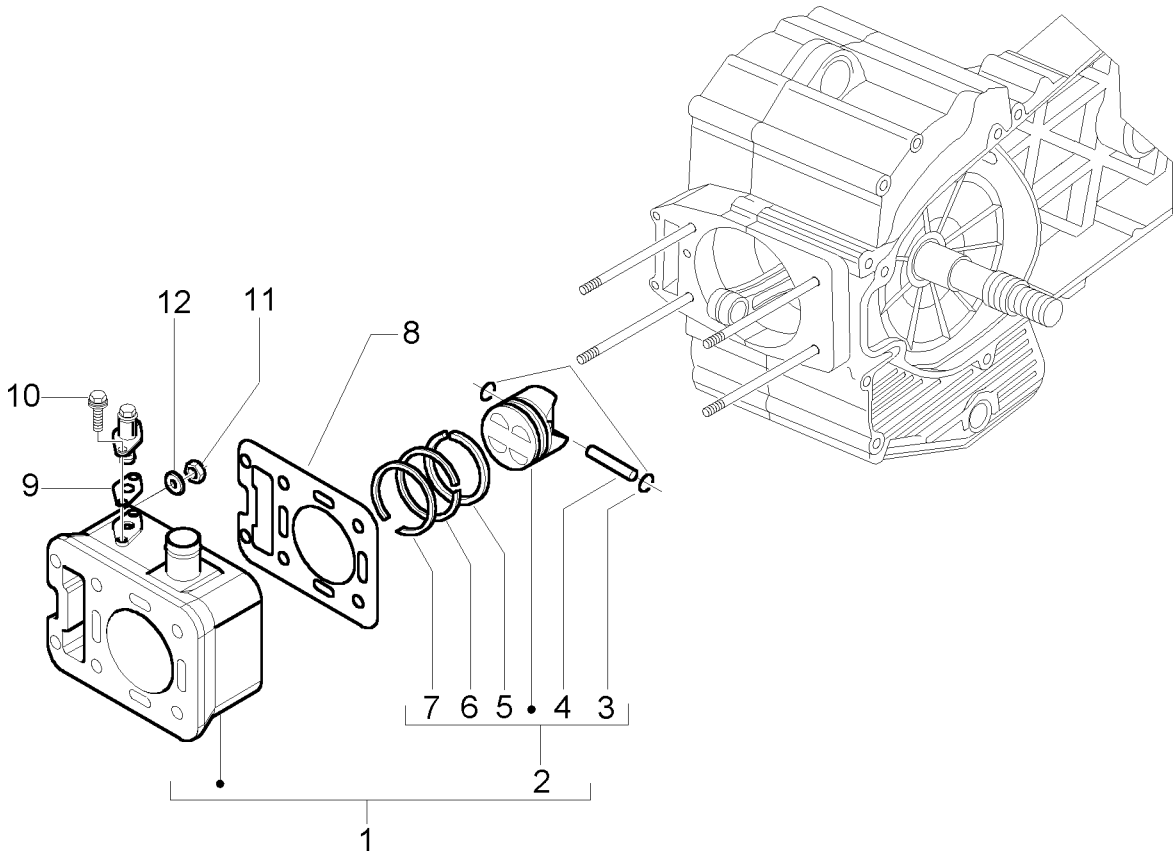

Pos. Pos. Loc. Pos. Pos.	Numero Numéro Number Nummer Número	Q.tà Q.té Q.ty M.ge Cant.	Nota Note Nota Anm. Nota	Denominazione	Désignation	Description	Beschreibung	Descripción
1	832811	1		Gr.cil.-pist.-spin.	Gr. cylindre-piston-axe	Cylinder-piston-wrist pin assy.	Zylinder/Kolben kpl	Gr. cilindro-pistón-eje
2	8328120001	1	FC1	Gr. pistone-spinotto	Ens. piston-Axe de pist.	Piston-wrist pin assy.	Gr. Kolben-bolzen	Gr. pistón-bulón
2	8328120002	1	FC2	Gr. pistone-spinotto	Ens. piston-Axe de pist.	Piston-wrist pin assy.	Gr. Kolben-bolzen	Gr. pistón-bulón
2	8328120003	1	FC3	Gr. pistone-spinotto	Ens. piston-Axe de pist.	Piston-wrist pin assy.	Gr. Kolben-bolzen	Gr. pistón-bulón
2	8328120004	1	FC4	Gr. pistone-spinotto	Ens. piston-Axe de pist.	Piston-wrist pin assy.	Gr. Kolben-bolzen	Gr. pistón-bulón
3	828116	2		Anello	Anneau	Ring	Ring	Anillo
4	827820	1		Spinotto	Axe	Pin	Zapfen	Eje
5	827707	1		Raschiaolio	Segment racleur d'huile	Scraper ring	Kolbenring ölabstreifer	Rascador de aceite
6	827706	1		Raschiaolio	Segment racleur d'huile	Scraper ring	Kolbenring ölabstreifer	Rascador de aceite
7	832770	1		Segmento di compr.	Segment de compr.	Compr. ring	Kompressions-Kolbenring	Aro de compresion
8	830275	1	0,8	Guarnizione	Joint	Packing	Dichtung	Junta
8	830276	1	0,6	Guarnizione	Joint	Packing	Dichtung	Junta

PIAGGIO®	GRUPPO CILINDRO-PISTONE-SPINOTTO ENSEMBLE CYLINDRE-PISTON-AXE DE PISTON CYLINDER-PISTON-WRIST PINI ASSY GRUPPE ZYLINDER-KOLBEN-KOLBENBOLZEN GRUPO CILINDRO-PISTON-EJE DE PISTON	T. 4 ZAPM 270W

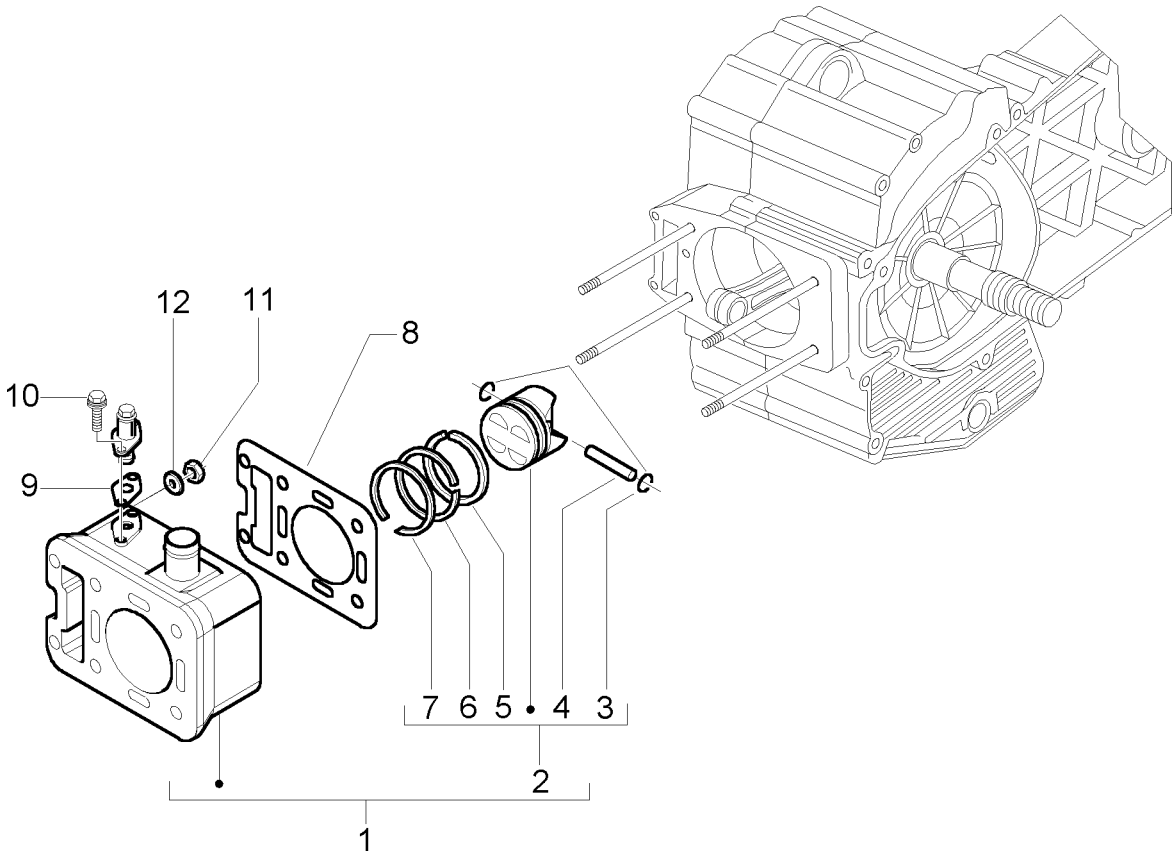

Pos. Pos. Loc. Pos. Pos.	Numero Numéro Number Nummer Número	Q.tà Q.té Q.ty M.ge Cant.	Nota Note Nota Anm. Nota	Denominazione	Désignation	Description	Beschreibung	Descripción
8	830277	1	0,4	Guarnizione	Joint	Packing	Dichtung	Junta
9	834254	1		Guarnizione	Joint	Packing	Dichtung	Junta
10	434541	2		Vite	Vis	Screw	Schraube	Tornillo
11	288245	2		Dado	Ecrou	Nut	Mutter	Tuerca
12	178790	4		Rondella	Rondelle	Washer	U.Scheibe	Arandela

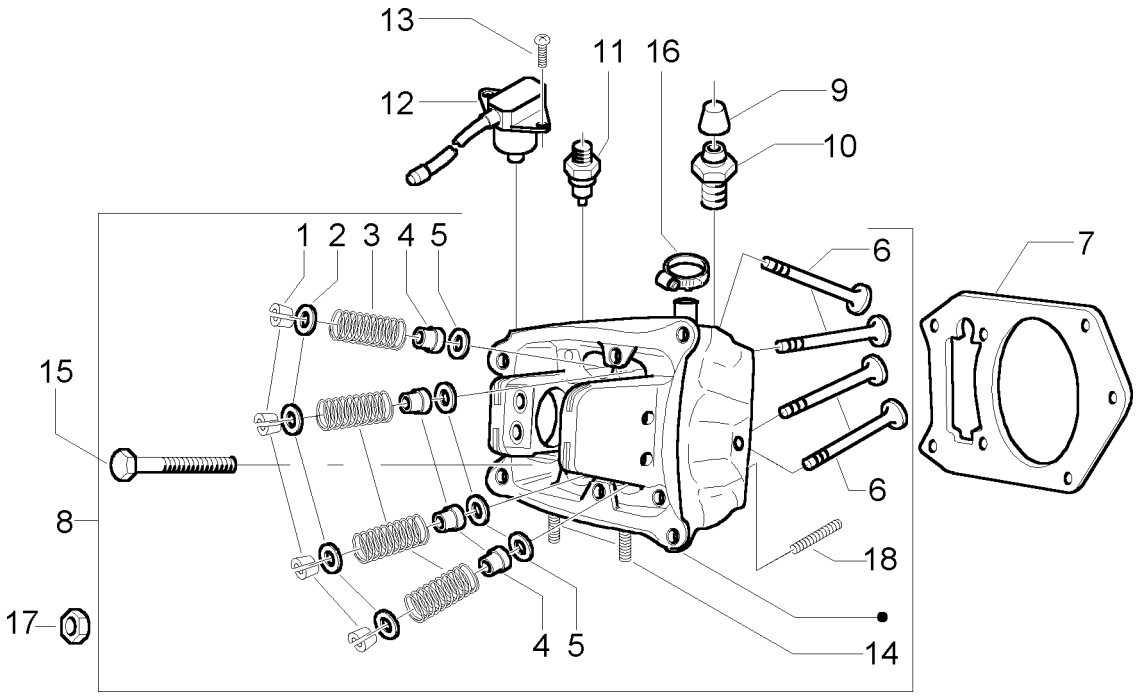

Pos. Pos. Loc. Pos. Pos.	Numero Numéro Number Nummer Número	Q.tà Q.té Q.ty M.ge Cant.	Nota Note Nota Anm. Nota	Denominazione	Désignation	Description	Beschreibung	Descripción
1	285846	8		Semiconi	Demi-cônes	Half cone	Halbkonusse	Semiconos
2	828396	4		Scodellino sup.	Coupelle sup.	Upper cap	Oberer ventilfederteller	Caja de cojinete sup.
3	826103	4		Molla	Ressort	Valve spring	Feder	Muelle
4	436438	4		Anello di tenuta	Joint spie	Oil seal	Dichtring	Retén de aceite
5	826256	4		Scodellino inf.	Coupelle inf.	Lower cap	Unterer ventilfederteller	Caja de cojinete inf.
6	828321	2	SCA	Valvola	Soupape	Valve	Ventil	Válvula
6	828322	2	ASP	Valvola	Soupape	Valve	Ventil	Válvula
7	830008	1		Guarnizione	Joint	Packing	Dichtung	Junta
8	831039	1		Testa cilindro compl.	Culasse compl.	Cylinder head ass.	Zylinderkopf komp.	Culata compl.
9	063435	1		Cappuccio	Cache	Cap	Kappe	Capuchón
10	430045	1		Vite	Vis	Screw	Schraube	Tornillo
11	828646	1		Sensore	Capteur	Sensor	Sensor	Sensor
12	5847685	1		Sensore	Capteur	Sensor	Sensor	Sensor
13	434541	1		Vite	Vis	Screw	Schraube	Tornillo
14	827018	2		Prigioniero	Goujon	Stud	Stiftschraube	Espárrago
15	830278	3		Vite	Vis	Screw	Schraube	Tornillo
16	CM001915	2		Fascetta	Collier	Clamp	Schelle	Abrazadera

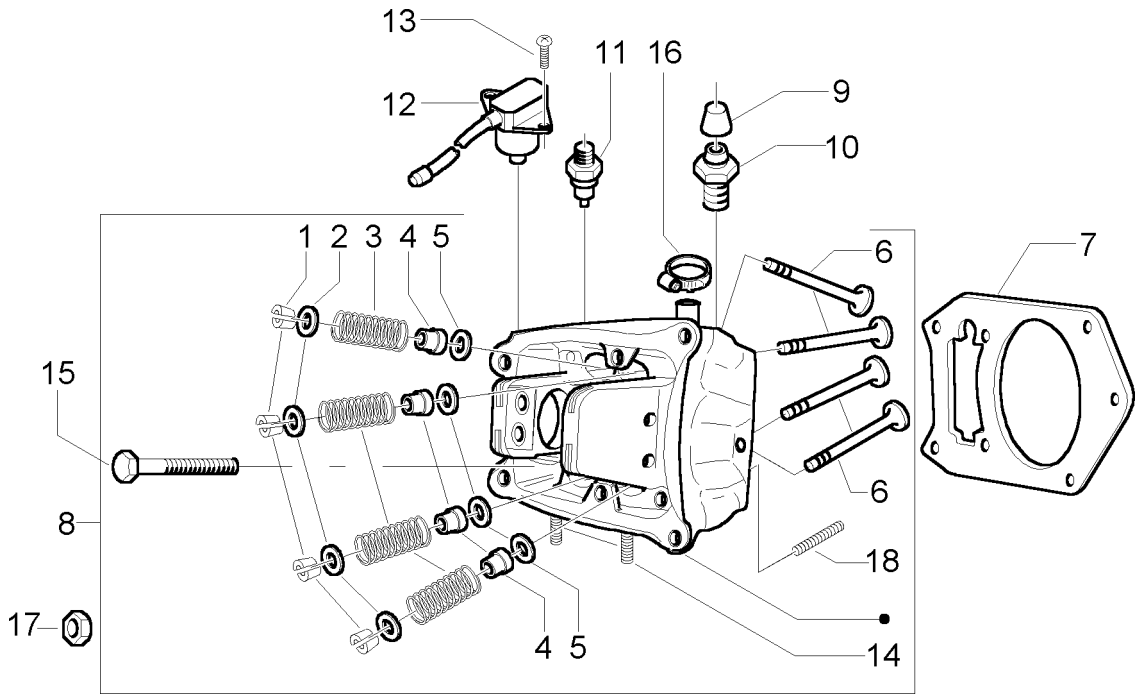

Pos. Pos. Loc. Pos. Pos.	Numero Numéro Number Nummer Número	Q.tà Q.té Q.ty M.ge Cant.	Nota Note Nota Anm. Nota	Denominazione	Désignation	Description	Beschreibung	Descripción
17	832783	4		Dado	Ecrou	Nut	Mutter	Tuerca
18	827953	2		Prigioniero	Goujon	Stud	Stiftschraube	Espárrago

PIAGGIO®	GRUPPO SUPPORTO BILANCIERI ENSEMBLE SUPPORT BALANCIERS ROCKER LEVERS SUPPORT EINHEIT KIPPHEBELHÄLTER SOPORTE BRAZO OSCILANTE	T. 6 ZAPM 270W

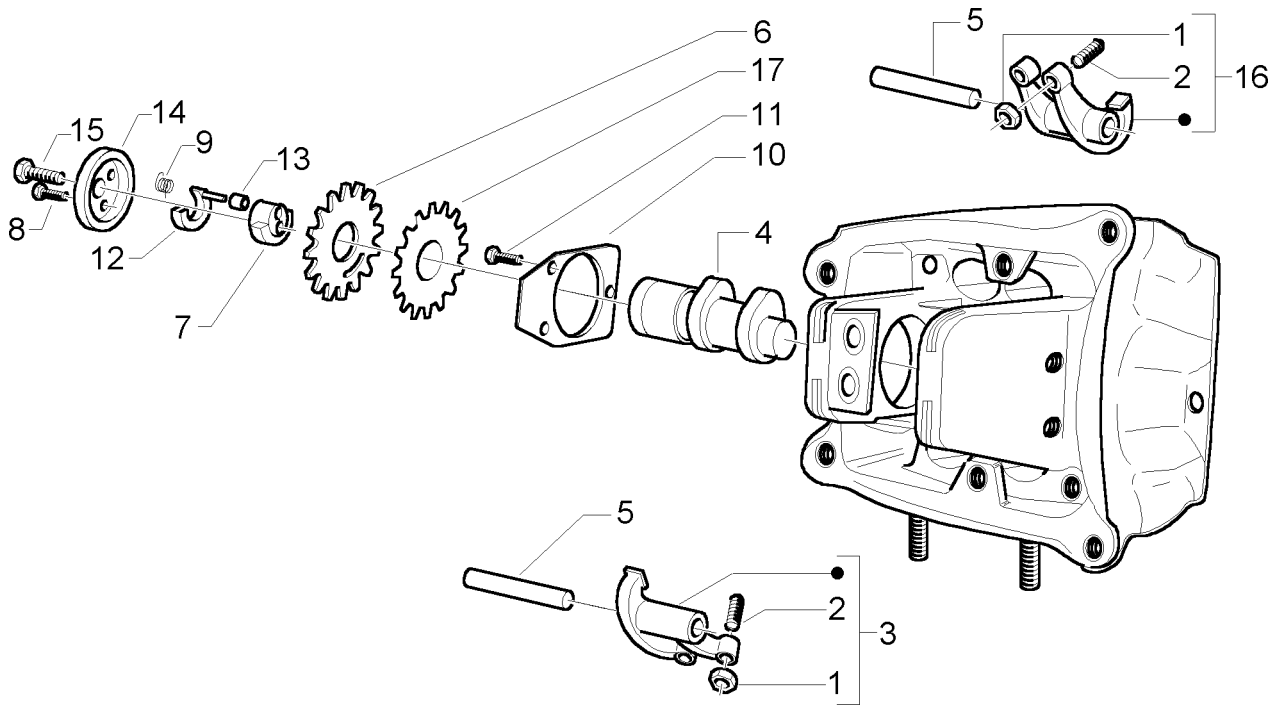

Pos. Pos. Loc. Pos. Pos.	Numero Numéro Number Nummer Número	Q.tà Q.té Q.ty M.ge Cant.	Nota Note Nota Anm. Nota	Denominazione	Désignation	Description	Beschreibung	Descripción
1	484819	4		Dado	Ecrou	Nut	Mutter	Tuerca
2	484654	4		Vite	Vis	Screw	Schraube	Tornillo
3	8260285	1	SCA	Bilanciere	Culbuteur	Equalizer	Schwinghebel	Balancín
4	8293655	1		Asse a camme	Axe à cames	Cam axle	Nockenwelle	Eje de levas
5	827991	2		Asse bilanciere	Axe culbuteur	Equalizer axle	Schwinghebelwelle	Eje balancín
6	829198	1		Corona distribuzione	Couronne distribution	Timing gear	Zahnkranz Ventilsteuerung	Corona distribucion
7	829071	1		Contrappeso	Contrepoids	Counter weight	Gegengewicht	Contrapeso
8	018538	1		Vite	Vis	Screw	Schraube	Tornillo
9	829252	1		Molla	Ressort	Spring	Feder	Muelle
10	831167	1		Lamierino	Tôle	Sheet	Blechstück	Lámina
11	831153	3		Vite	Vis	Screw	Schraube	Tornillo
12	8311615	1		Massetta decompressione	Masse décompression	Decompression counterweight	Dekompressions masse	Masa de decompresion
13	829097	1		Guarnizione	Joint	Packing	Dichtung	Junta
14	829247	1		Campana decompressione	Cloche décompression	Decompression bell	Dekompressionskorb	Campana de decompresion
15	829287	1		Vite	Vis	Screw	Schraube	Tornillo
16	8260275	1	ASP	Bilanciere	Culbuteur	Equalizer	Schwinghebel	Balancín
17	829211	1		Ruota fonica	Codeur	Encoder	Encoder Tonrad	Encoder

PIAGGIO®	COPERCHIO TESTA COUVERCLE CULASSE CYLINDER HEAD COVER ZYLINDERKOPFABDECKUNG TAPA CULATA	T. 7 ZAPM 270W

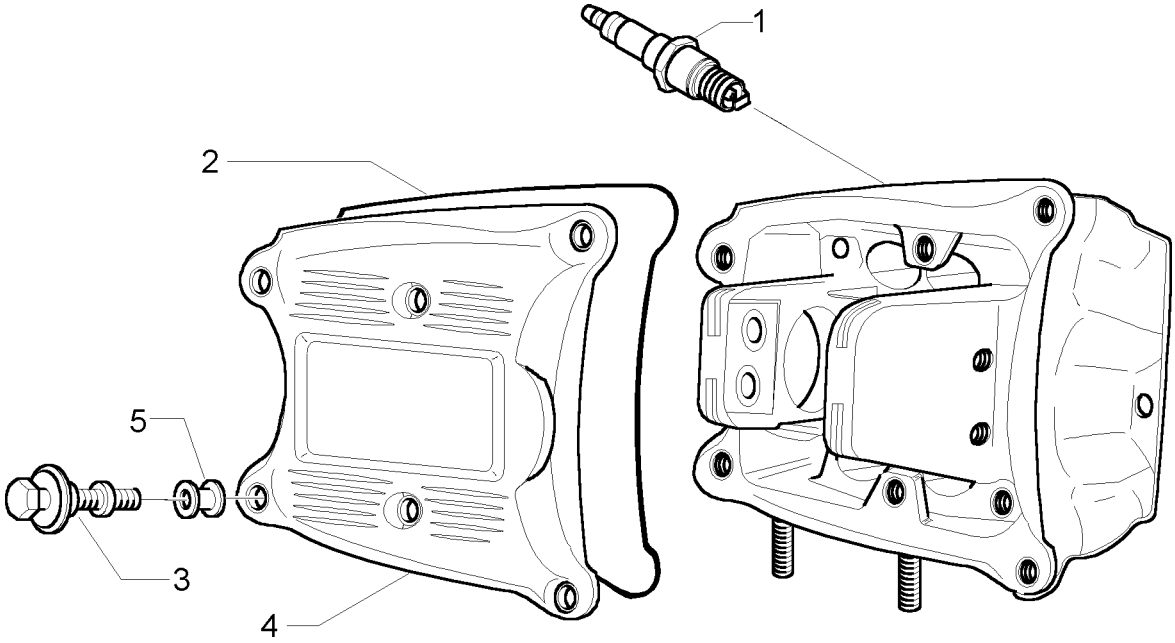

Pos. Pos. Loc. Pos. Pos.	Numero Numéro Number Nummer Número	Q.tà Q.té Q.ty M.ge Cant.	Nota Note Nota Anm. Nota	Denominazione	Désignation	Description	Beschreibung	Descripción
1	438073	1	CMP	Candela accensione	Bougie d'allumage	Spark plug	Zündkerze	Bujía de encendido
1	829981	1	NGK	Candela accensione	Bougie d'allumage	Spark plug	Zündkerze	Bujía de encendido
2	830820	1		Guarnizione	Joint	Packing	Dichtung	Junta
3	830248	6		Vite	Vis	Screw	Schraube	Tornillo
4	830819	1		Coperchio testa	Couvercle culasse	Cylinder head cover	Zylinderkopf-abdeckung	Tapa culata
5	830249	6		Tampone	Silentbloc	Buffer	Puffer	Silent-block

PIAGGIO®	PULEGGIA MOTRICE POULIE MOTRICE DRIVING PULLEY TREIBENDE RIEMENSCHEIBE POLEA MOTRIZ	T. 8 ZAPM 270W

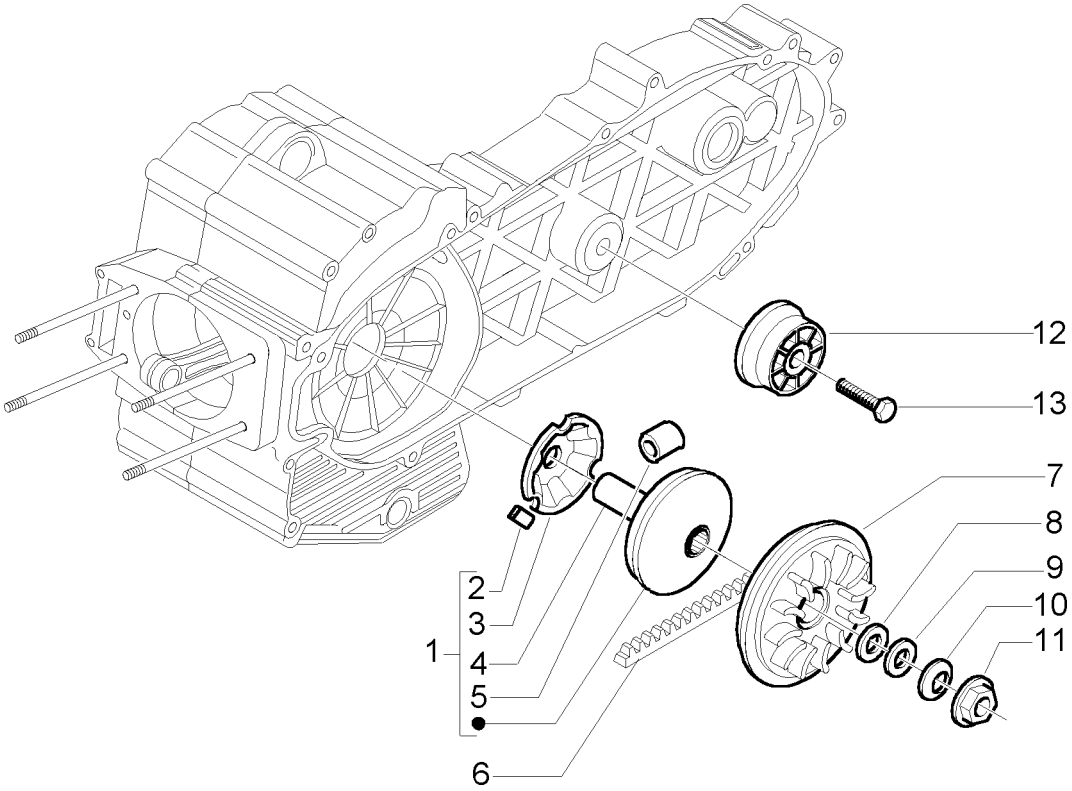

Pos. Pos. Loc. Pos. Pos.	Numero Numéro Number Nummer Número	Q.tà Q.té Q.ty M.ge Cant.	Nota Note Nota Anm. Nota	Denominazione	Désignation	Description	Beschreibung	Descripción
1	833291	1		Contenitore rulli	Logement roleaux	Roller housing	Reglergehausehalfte	Alojamento rodillos
2	842175	3		Pattino	Doigt	Shoe	Gleitauflage	Patín
3	830901	1		Contrasto rulli	Couvercle rouleaux	Rollers cover	Rollenanschlag	Contraste rodillos
4	825381	1		Distanziale	Entretoise	Spacer	Distanzstück	Distanciador
5	830899	8		Rullo	Rouleau	Roller	Rollen	Rodillo
6	832738	1		Cinghia trapezoidale	Courroie trapéz	V-belt	Keilriemen	Correa trapezoidal
7	832697	1		Semipuleggia	Demi-poulie	Half pulley	Halbscheibe	Semipolea
8	829205	1		Rondella	Rondelle	Washer	U.Scheibe	Arandela
9	829203	1		Rondella	Rondelle	Washer	U.Scheibe	Arandela
10	829251	1		Molla a tazza	Ressort à diaphragme	Cup spring	Tassenfeder	Muelle
11	829232	1		Dado	Ecrou	Nut	Mutter	Tuerca
12	834304	1		Puleggia smorzatrice	Poulie d'amortissement	Damping pulley	Dämpferscheibe	Polea amortiguadora
13	829693	1		Vite	Vis	Screw	Schraube	Tornillo

PIAGGIO®	PULEGGIA CONDOTTA POULIE ENTRAINEE DRIVEN PULLEY GETRIEBENE RIEMENSCHEIBEN POLEA CONDUCIDA	T. 9 ZAPM 270W

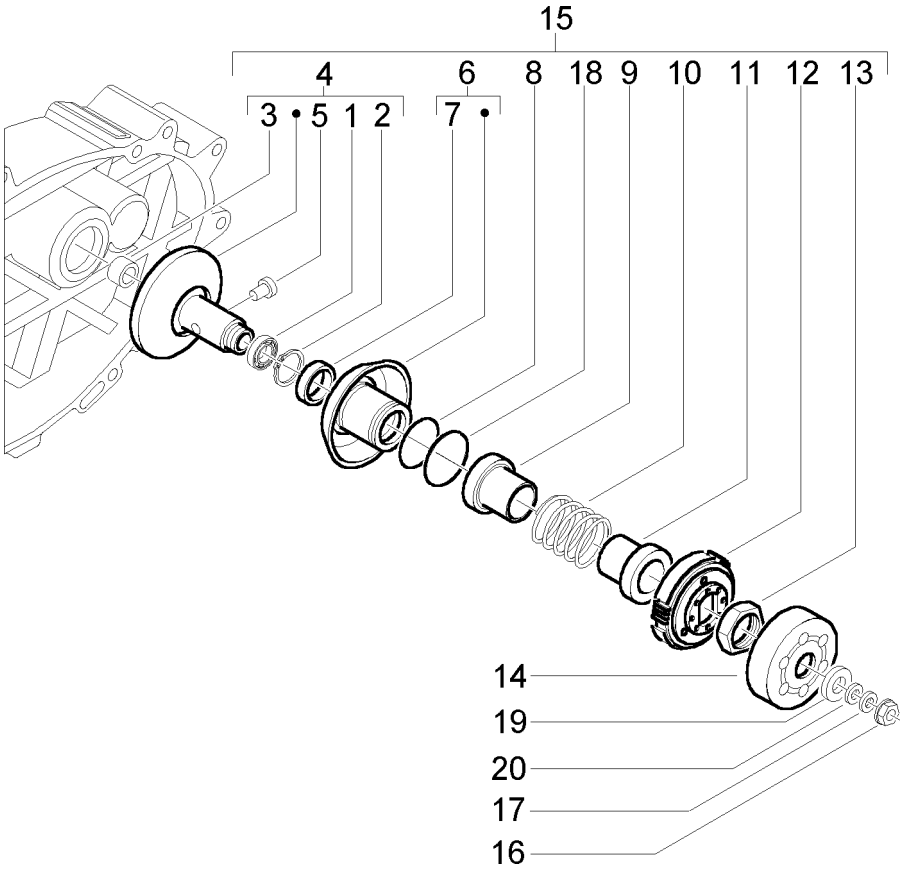

Pos. Pos. Loc. Pos. Pos.	Numero Numéro Number Nummer Número	Q.tà Q.té Q.ty M.ge Cant.	Nota Note Nota Anm. Nota	Denominazione	Désignation	Description	Beschreibung	Descripción
1	82627R	1		Cuscinetto	Roulement	Bearing	Lager	Cojinete
2	825382	1		Anello elastico	Circlips	Circlip	Sprengring	Anillo elastico
3	829808	1		Astuccio a rullini	Cage á roul.	Roller cage	Rollenlagerkafig	Jaula rodillos
4	832774	1		Semipuleggia	Demi-poulie	Half pulley	Halbscheibe	Semipolea
5	828978	4		Perno	Pivot	Pin	Zapfen	Perno
6	832808	1		Semipuleggia	Demi-poulie	Half pulley	Halbscheibe	Semipolea
7	825239	2		Anello tenuta	Bague d'étanchéite	Oil seal	Dichtring	Reten de ac.
8	825237	1		Guarnizione	Joint	Packing	Dichtung	Junta
9	828974	1		Scodellino	Rondelle d'ar	Stop washer	Federaufnahme	Platillo
10	831098	1		Molla variatore	Ressort variateur	Converter spring	Feder Variator	Muelle variador
11	825384	1		Scodellino frizione	Coupelle embrayage	Clutch cup	Federteller Kupplung	Tapa embrague
12	8405775	1		Frizione centrifuga compl.	Embrayage centrifuge compl.	Centrifugal clutch assy.	Fliehkraftkupplung kompl.	Embrague centrífugo
13	825385	1		Ghiera	Douille	Ring nut	Gewindering	Casquillo
14	825176	1		Tamburo frizione	Tambour d'embr.	Clutch drum	Kupplungstrommel	Tambor de embr.
15	842559	1		Puleggia condotta	Groupe embrayage	Driving pulley	Riemenscheibe	Polea conducida
16	827116	1		Dado	Ecrou	Nut	Mutter	Tuerca
17	840319	1		Rondella	Rondelle	Washer	U.Scheibe	Arandela
18	828984	1		Guarnizione	Joint	Packing	Dichtung	Junta
19	825763	1		Distanziale	Entretoise	Spacer	Distanzstück	Distanciador

PIAGGIO®	PULEGGIA CONDOTTA POULIE ENTRAINEE DRIVEN PULLEY GETRIEBENE RIEMENSCHEIBEN POLEA CONDUCIDA	T. 9 ZAPM 270W

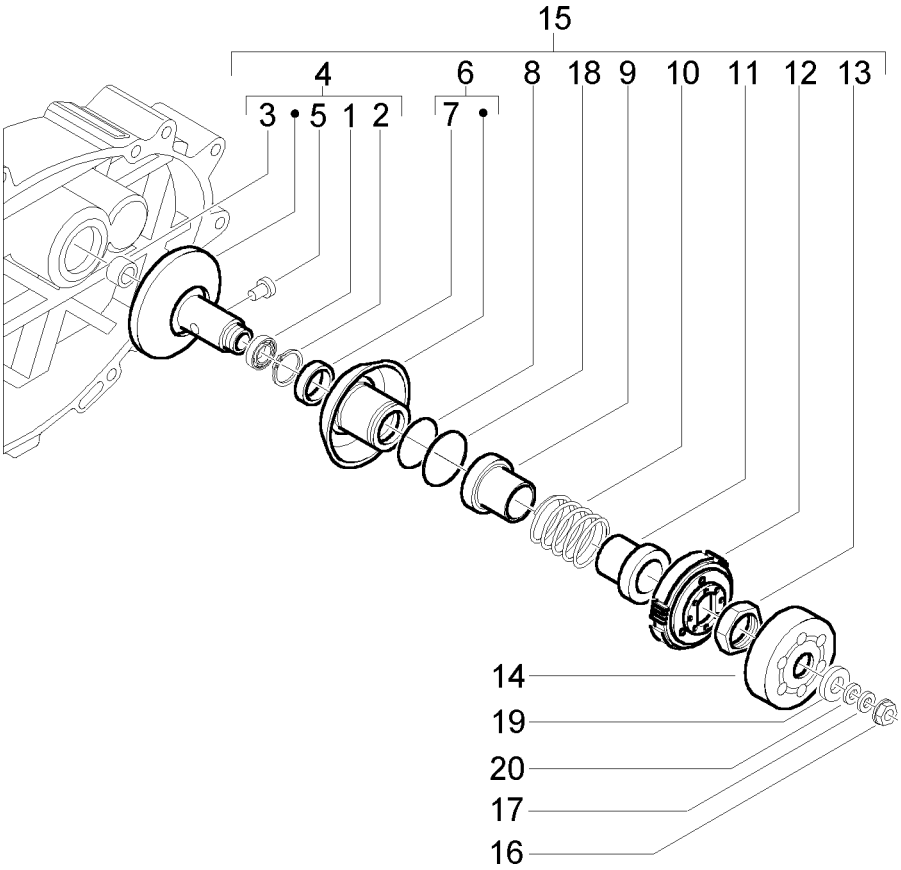

Pos. Pos. Loc. Pos. Pos.	Numero Numéro Number Nummer Número	Q.tà Q.té Q.ty M.ge Cant.	Nota Note Nota Anm. Nota	Denominazione	Désignation	Description	Beschreibung	Descripción
20	840320	1		Rondella	Rondelle	Washer	U.Scheibe	Arandela

PIAGGIO®	RAFFREDDAMENTO CARTER REFROIDISSEMENT CARTER CRANKCASE COOLING KÜHLUNG KURBELGEHÄUSE REFRIGERACION CARTER	T. 10 ZAPM 270W

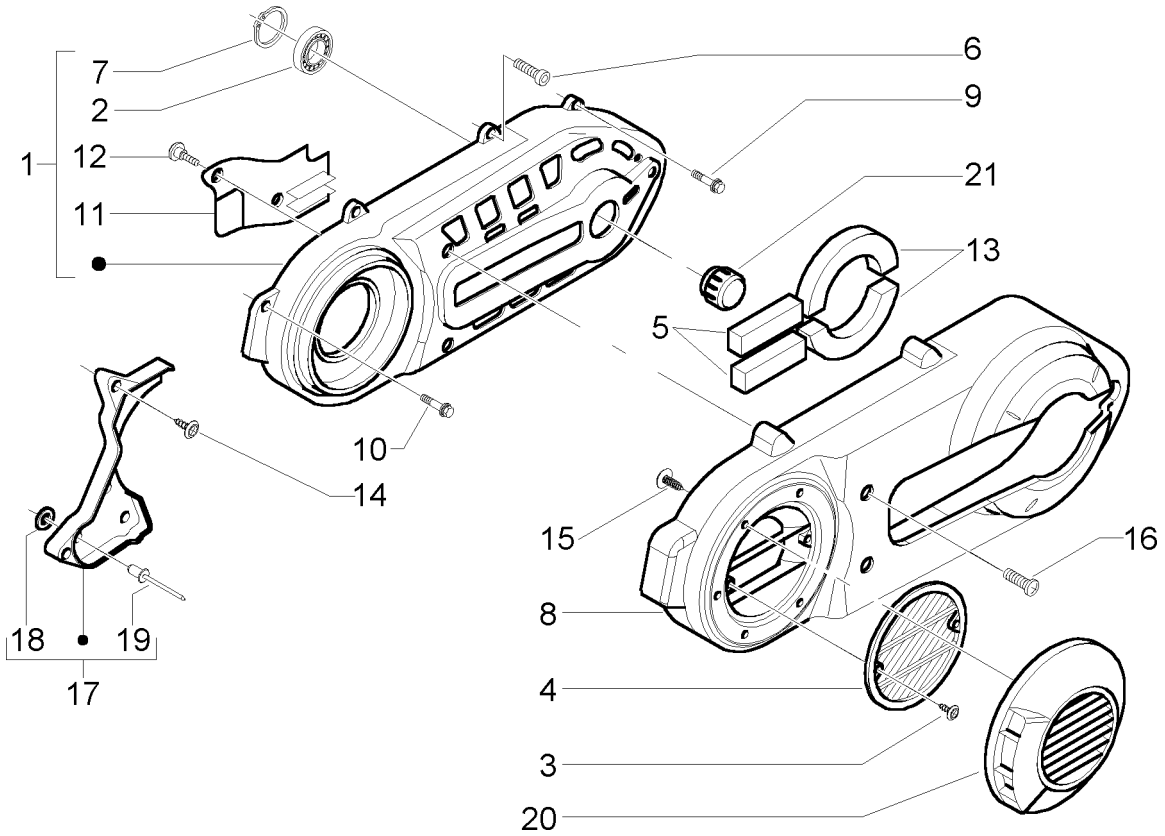

Pos. Pos. Loc. Pos. Pos.	Numero Numéro Number Nummer Número	Q.tà Q.té Q.ty M.ge Cant.	Nota Note Nota Anm. Nota	Denominazione	Désignation	Description	Beschreibung	Descripción
1	8423545	1		Coperchio trasmissione	Couvercle transmission	Transmission cover	Getriebeabdeckung	Tapa transmision
2	840277	1		Cuscinetto	Roulement	Bearing	Lager	Cojinete
3	270793	2		Vite	Vis	Screw	Schraube	Tornillo
4	833318	1		Filtro aria	Filtre à air	Air filter	Luftfilter	Filtro de aire
5	833320	2		Insonorizzante	Insonorisant	Soundproofing material	Schalldämpfung	Insonorizante
6	414834	7		Vite	Vis	Screw	Schraube	Tornillo
7	825667	1		Anello elastico	Circlips	Circlip	Sprengring	Anillo elastico
8	833314	1		Coperchio insonoriz. trasm.	Couvercle insonoris. Transm.	Transm. Soundproof. cover	Schallgedämp. Deckel für Antrieb	Tapa insonoriz. Transm.
9	833663	2		Vite	Vis	Screw	Schraube	Tornillo
10	833664	2		Vite	Vis	Screw	Schraube	Tornillo
11	842355	1		Deflettore	Déflecteur	Deflector	Deckblech	Deflector
12	575249	2		Vite	Vis	Screw	Schraube	Tornillo
13	833321	2		Insonoriz. coperchio	Insonoris.couvercle	Cover soundproof. material	Schalldämpfung Deckel	Insonorizante tapa
14	259348	2		Vite	Vis	Screw	Schraube	Tornillo
15	270793	4		Vite	Vis	Screw	Schraube	Tornillo
16	575249	4		Vite	Vis	Screw	Schraube	Tornillo

PIAGGIO®	RAFFREDDAMENTO CARTER REFROIDISSEMENT CARTER CRANKCASE COOLING KÜHLUNG KURBELGEHÄUSE REFRIGERACION CARTER	T. 10 ZAPM 270W

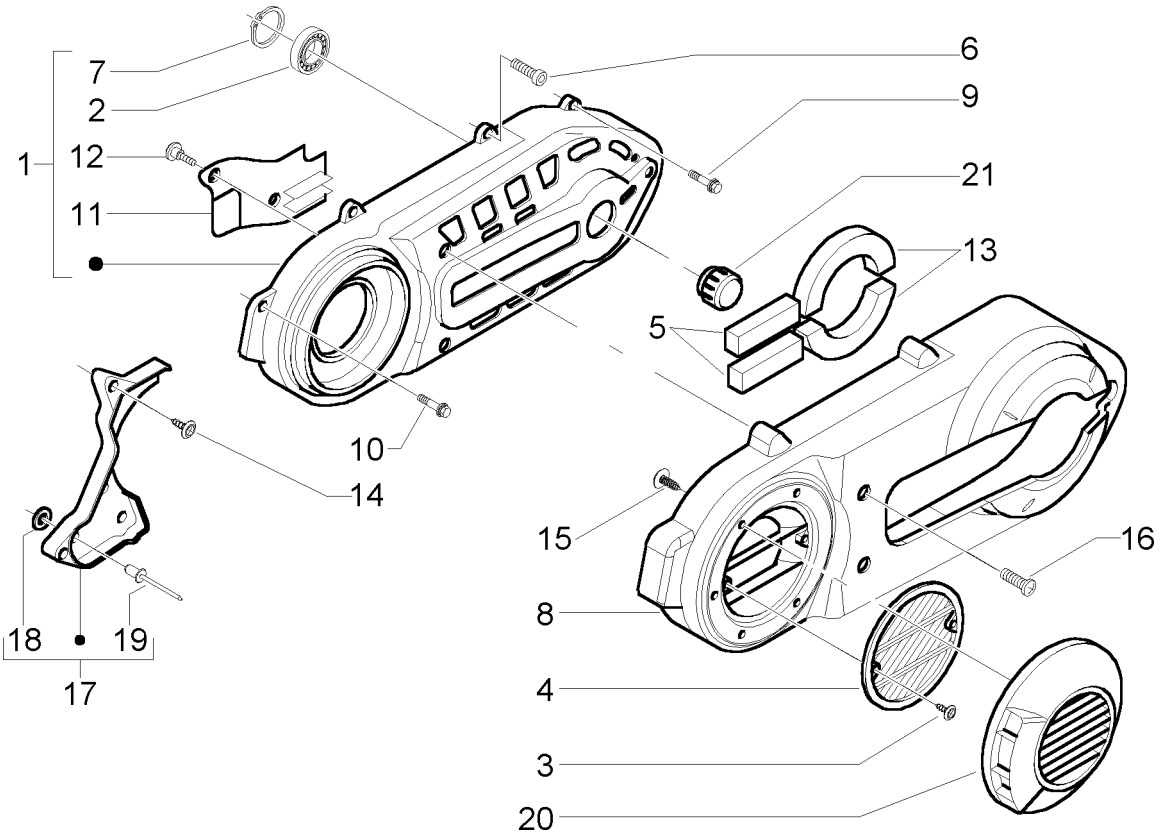

Pos. Pos. Loc. Pos. Pos.	Numero Numéro Number Nummer Número	Q.tà Q.té Q.ty M.ge Cant.	Nota Note Nota Anm. Nota	Denominazione	Désignation	Description	Beschreibung	Descripción
17	620876	1		Protezione	Protection	Guard	Schutz	Proteccion
18	016670	3		Rondella	Rondelle	Washer	U.Scheibe	Arandela
19	252099	3		Rivetto	Rivet	Rivet	Niete	Remache
20	841490	1		Convogliatore	Canalisation	Conveyor	Luftzufuhr	Deflector
21	840439	1		Coperchio	Couvercle	Cover	Deckel	Tapa

PIAGGIO®	POMPA OLIO - AVVIAMENTO ELETTRICO POMPE À HUILE - DÉMARRAGE ÉLECTIQUE OIL PUMP - ELECTRIC STARTER ÖLPUMPE - ELEKTRISCHER STARTER BOMBA DE ACEITE - ARRANQUE ELECTRICO	T. 11 ZAPM 270W

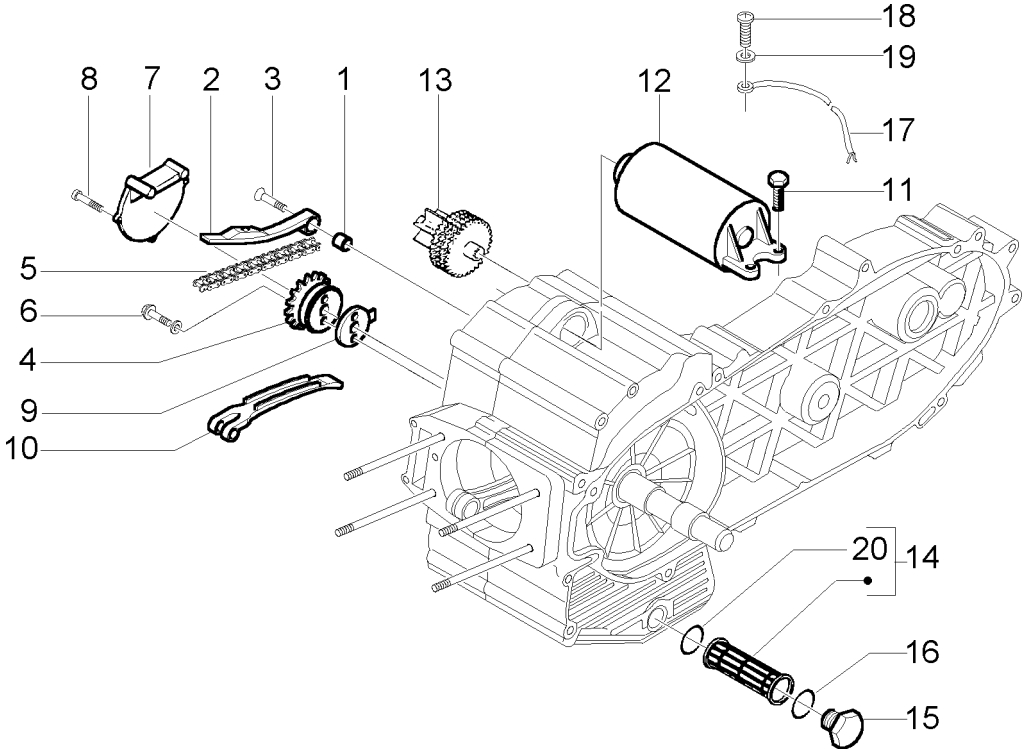

Pos. Pos. Loc. Pos. Pos.	Numero Numéro Number Nummer Número	Q.tà Q.té Q.ty M.ge Cant.	Nota Note Nota Anm. Nota	Denominazione	Désignation	Description	Beschreibung	Descripción
1	825737	1		Distanziale	Entretoise	Spacer	Distanzstück	Distanciador
2	827886	1		Asta tendicatena	Axe tendeur de chaîne	Chain tightener rod	Kettenspanner	Barra tens. de cadena
3	830129	1		Vite	Vis	Screw	Schraube	Tornillo
4	825281	1		Pompa olio compl.	Pompe à huile compl.	Oil pump assy.	Ölpumpe kompl.	Bomba del aceite compl.
5	827889	1		Catena distribuz.	Chaîne de distribut.	Timing chain	Ventilsteuerkette	Cadena distribuc.
6	433477	2		Vite	Vis	Screw	Schraube	Tornillo
7	830064	1		Paratia olio	Paroi huile	Oil wall	Öl-Zwischenwand	Separador aceite
8	830061	2		Vite	Vis	Screw	Schraube	Tornillo
9	828118	1		Guarnizione carter/pompa olio	Joint carter/pompe huile	Oil pump/crankcase gasket	Dichtung Motorgehäuse/ ölpumpe	Junta carter/bomba aceite
10	827882	1		Pattino fisso	Patin fixe	Fixed pad	Fester Laufschuh	Patín fijo
11	414837	2		Vite	Vis	Screw	Schraube	Tornillo
12	82699R	1		Motorino avviamento	Moteur du démarreur	Starter motor	Startermotor	Motor de arranque
13	8321174	1		Limitatore coppia compl.	Limiteur de couple compl.	Torque limiter compl.	Drehmomentbegrenzer kompl.	Limitador de par
14	826033	1		Filtro olio aspiraz.	Filtre huile admis.	Intake oil filter	Öl-Ansaugfilter	Filtro aceite admis.
15	826165	1		Tappo filtro olio	Bouchon filtre huile	Oil filter plug	Ölfilterverschluß	Tapa filtro aceite
16	285536	1		O-ring	O-Ring	O-Ring	O-Ring	Anillo OR

PIAGGIO®	POMPA OLIO - AVVIAMENTO ELETTRICO POMPE À HUILE - DÉMARRAGE ÉLECTIQUE OIL PUMP - ELECTRIC STARTER ÖLPUMPE - ELEKTRISCHER STARTER BOMBA DE ACEITE - ARRANQUE ELECTRICO	T. 11 ZAPM 270W

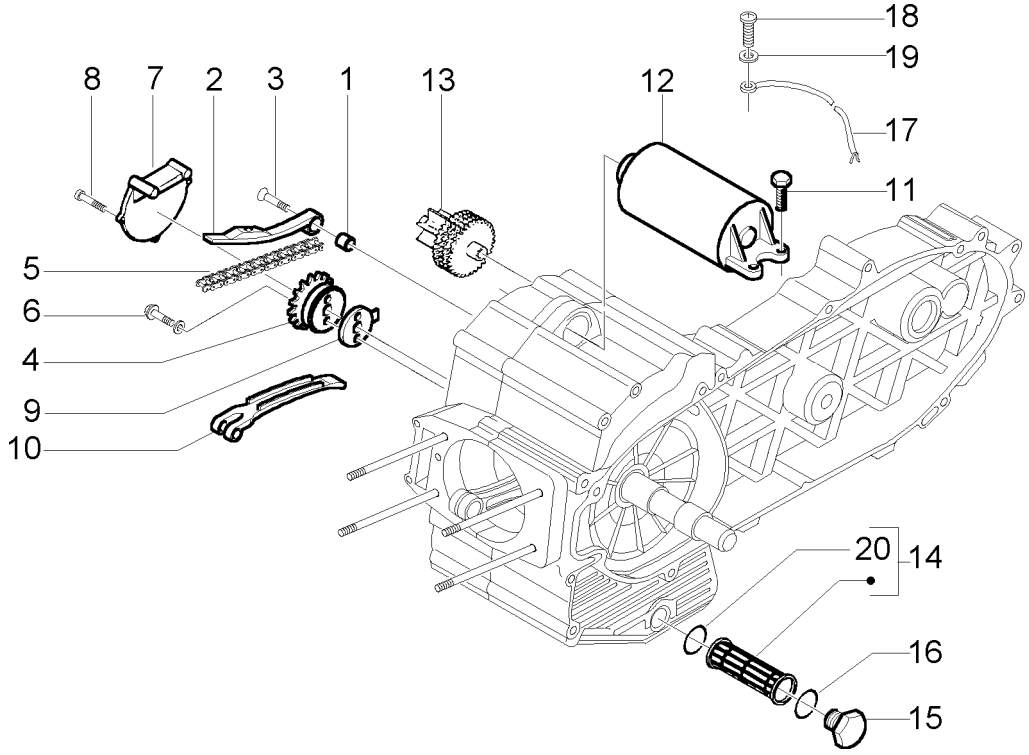

Pos. Pos. Loc. Pos. Pos.	Numero Numéro Number Nummer Número	Q.tà Q.té Q.ty M.ge Cant.	Nota Note Nota Anm. Nota	Denominazione	Désignation	Description	Beschreibung	Descripción
17	584843	1		Cavetto di massa	Cable masse	Ground cable	Masse kabel	Cable masa
18	031086	1		Vite	Vis	Screw	Schraube	Tornillo
19	016406	1		Rondella	Rondelle	Washer	U.Scheibe	Arandela
20	288474	1		Guarnizione	Joint	Packing	Dichtung	Junta

PIAGGIO®	VOLANO MAGNETE VOLANT MAGNETIQUE FLYWHEEL MAGNETO LICHTMASCHINE VOLANTE MAGNETICO	T. 12 ZAPM 270W

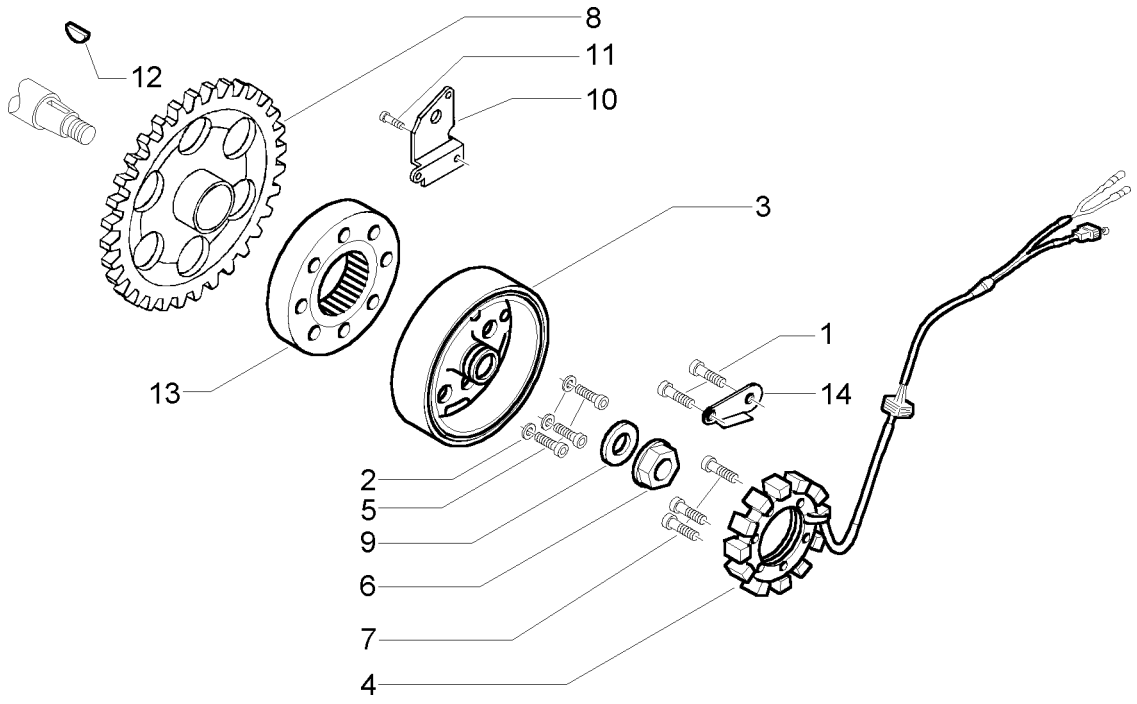

Pos. Pos. Loc. Pos. Pos.	Numero Numéro Number Nummer Número	Q.tà Q.té Q.ty M.ge Cant.	Nota Note Nota Anm. Nota	Denominazione	Désignation	Description	Beschreibung	Descripción
1	018575	2		Vite	Vis	Screw	Schraube	Tornillo
2	479515	6		Rondella	Rondelle	Washer	U.Scheibe	Arandela
3	58040R	1		Rotore compl.	Rotor compl.	Rotor, assy.	Rotor kpl.	Rotor compl.
4	82736R	1		Statore compl.	Stator, assy.	Backplate, assy.	Ankerplatte kpl.	Estator compl.
5	840893	6		Vite	Vis	Screw	Schraube	Tornillo
6	827116	1		Dado	Ecrou	Nut	Mutter	Tuerca
7	122637	3		Vite	Vis	Screw	Schraube	Tornillo
8	82737R	1		Corona dentata	Couronne dentée	Ring gear	Zahnrad	Corona dentada
9	825725	1		Rondella	Rondelle	Washer	U.Scheibe	Arandela
10	828109	1		Lamierino	Tôle	Sheet	Blechstück	Lámina
11	015715	3		Vite	Vis	Screw	Schraube	Tornillo
12	000097	1		Chiavetta	Clavette	Key	Keil	Chaveta
13	825431	1		Ruota libera compl.	Roue libre compl.	Free wheel assy.	Freilauf kpl.	Rueda libre compl.
14	830886	1		Lamierino	Tôle	Sheet	Blechstück	Lámina

PIAGGIO®	**COPERCHIO VOLANO - FILTRO OLIO** **CARTER VOLANT - FILTRE À HUILE** **FLYWHEEL COVER - OIL FILTER** **SCHWUNGRADDECKEL - ÖLFILTER** **TAPA VOLANTE - FILTRO DE ACEITE**	**T. 13** **ZAPM 270W**

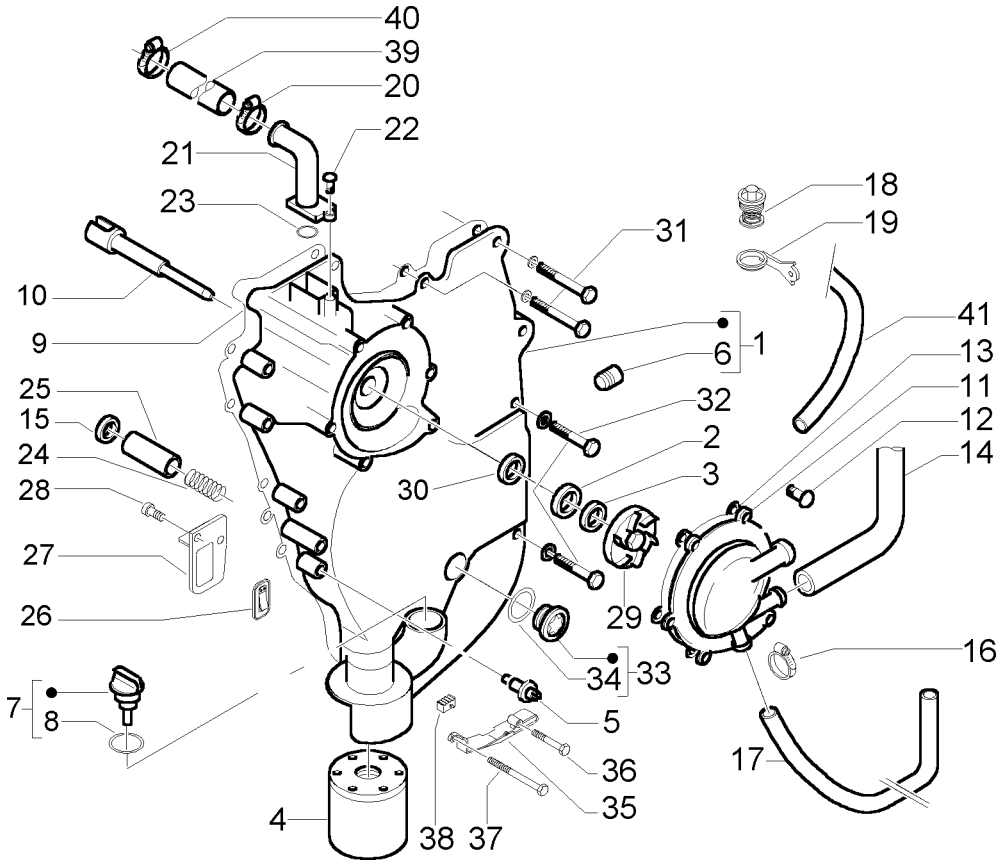

Pos. Pos. Loc. Pos. Pos.	Numero Numéro Number Nummer Número	Q.tà Q.té Q.ty M.ge Cant.	Nota Note Nota Anm. Nota	Denominazione	Désignation	Description	Beschreibung	Descripción
1	8415115	1		Coperchio volano	Carter volant	Flywheel cover	Schwungraddeckel	Tapa volante
2	486216	1		Inserto ceramico	Pièce céramique	Ceramic insert	Keramikeinsatz	Encaje ceràmico
3	829557	1		Rondella	Rondelle	Washer	U.Scheibe	Arandela
4	82658R	1		Filtro olio	Filtre à huile	Oil filter	Ölfilter	Filtro de aceite
5	82580R	1		Sensore pressione olio	Capteur pression huile	Oil pressure sensor	Öldrucksensor	Sensor presion de aceite
6	411311	1		Tappo conico	Bouchon conique	Conical plug	Konischer Verschluß	Tapa conica
7	825665	1		Tappo olio	Bouchon huile	Oil plug	Öleinfüllschraube	Tapón aceite
8	479986	1		Guarnizione tappo	Joint bouchon	Packing for cap	Deckeldichtung	Junta tapón
9	841150	1		Guarnizione	Joint	Packing	Dichtung	Junta
10	828394	1		Albero pompa acqua	Arbre de pompe a eau	Coolant pump shaft	Wasserpumpenwelle	Eje bomba de agua
11	833717	1		Coperchio pompa	Couvercle pompe	Pump cover	Pumpendeckel	Tapa bomba
12	259151	6		Vite	Vis	Screw	Schraube	Tornillo
13	827884	1		Guarnizione	Joint	Packing	Dichtung	Junta
14	841101	1		Tubo	Tuyau	Tube	Schlauch	Tubo
15	486075	1		Rondella	Rondelle	Washer	U.Scheibe	Arandela
16	CM001917	2		Fascetta	Collier	Clamp	Schelle	Abrazadera
17	840826	1		Tubo acqua	Tuyau de l'eau	Water pipe	Kühlflüssigkeitsleitung	Tubo agua

PIAGGIO®	COPERCHIO VOLANO - FILTRO OLIO CARTER VOLANT - FILTRE À HUILE FLYWHEEL COVER - OIL FILTER SCHWUNGRADDECKEL - ÖLFILTER TAPA VOLANTE - FILTRO DE ACEITE	T. 13 ZAPM 270W

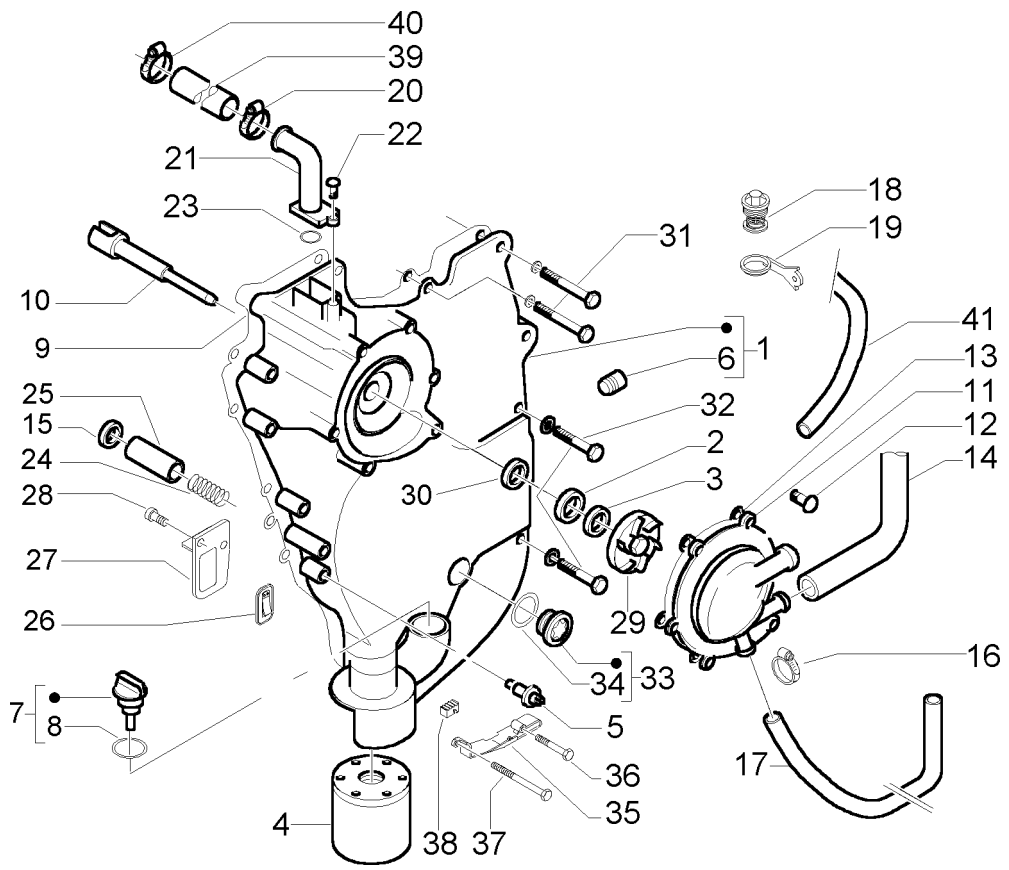

Pos. Pos. Loc. Pos. Pos.	Numero Numéro Number Nummer Número	Q.tà Q.té Q.ty M.ge Cant.	Nota Note Nota Anm. Nota	Denominazione	Désignation	Description	Beschreibung	Descripción
18	834484	1		Termostato acqua	Thermostat de l'eau	Water thermostat	Thermostat Kühlflüssigkeit	Termostato agua
19	840062	1		Staffa	Support	Bracket	Halterung	Soporte
20	CM001904	1		Fascetta	Collier	Clamp	Schelle	Abrazadera
21	829047	1		Tubo sfiato	Tuyau réniflard	Breather tube	Entlüftungsleitung	Tubo respiradero
22	015715	1		Vite	Vis	Screw	Schraube	Tornillo
23	237553	1		O-ring	O-Ring	O-Ring	O-Ring	Anillo OR
24	829486	1		Molla valvola pressione olio	Ressort soupape pression d'huile	Oil pressure valve spring	Feder öldruckventil	Muelle vàlvula presion aceite
25	829661	1		Valvola bypass	Soupape bypass	Bypass valve	Schlauchventil	Válvula bypass
26	825051	1		Supporto lamelle	Support lamelles	Reeds bracket	Einlassmembran	Soporte lamin.
27	828930	1		Paratia	Panneau	Panel	Wand	Panel
28	433800	2		Vite	Vis	Screw	Schraube	Tornillo
29	827929	1		Girante pompa	Roue de pompe	Rotor	Wasserpumpenrad	Rotor de la bomba
30	485084	1		Anello tenuta	Bague d'étanchéite	Oil seal	Dichtring	Reten de ac.
31	414838	8		Vite	Vis	Screw	Schraube	Tornillo
32	414837	2		Vite	Vis	Screw	Schraube	Tornillo
33	8290405	1		Tappo	Bouchon	Plug	Verschluß	Tapón
34	479986	1		Guarnizione tappo	Joint bouchon	Packing for cap	Deckeldichtung	Junta tapón
35	583584	1		Piastrina	Plaquette	Plate	Plättchen	Placa

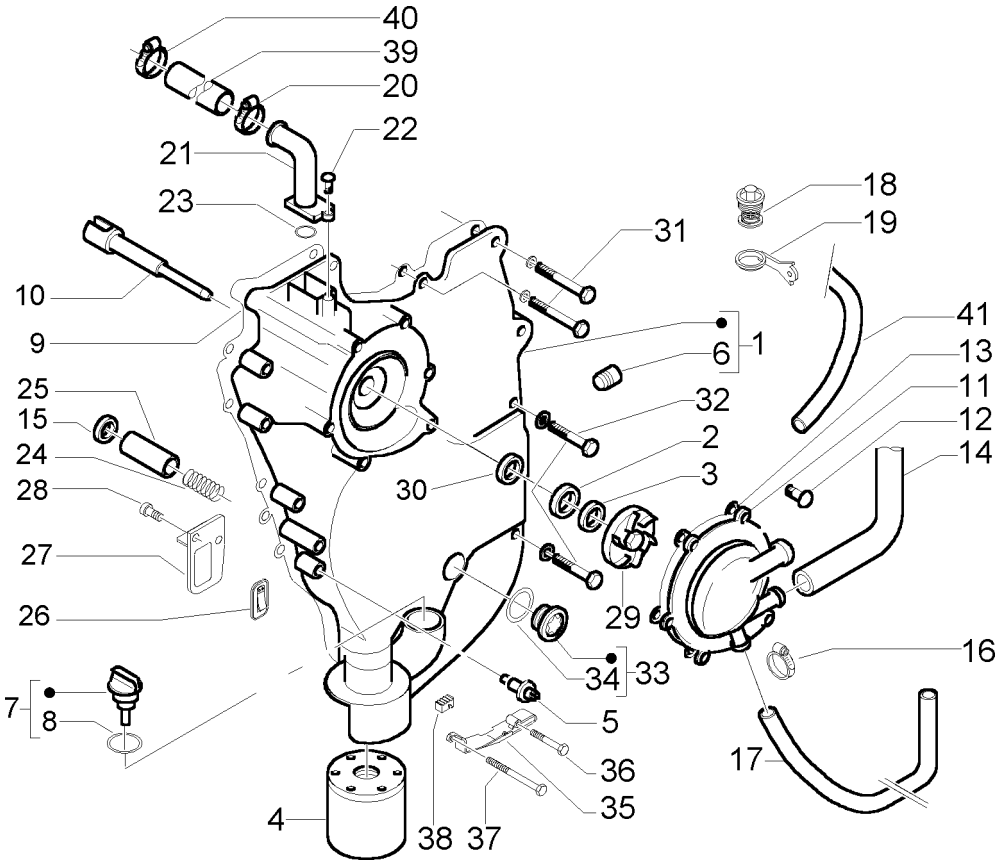

Pos. Pos. Loc. Pos. Pos.	Numero Numéro Number Nummer Número	Q.tà Q.té Q.ty M.ge Cant.	Nota Note Nota Anm. Nota	Denominazione	Désignation	Description	Beschreibung	Descripción
36	289731	1		Vite	Vis	Screw	Schraube	Tornillo
37	478895	1		Vite	Vis	Screw	Schraube	Tornillo
38	583973	1		Tampone	Silentbloc	Buffer	Puffer	Silent-block
39	829254	1		Tubo	Tuyau	Tube	Schlauch	Tubo
40	CM001907	1		Fascetta	Collier	Clamp	Schelle	Abrazadera
41	841102	1		Tubo acqua	Tuyau de l'eau	Water pipe	Kühlflüssigkeitsleitung	Tubo agua

PIAGGIO®	COPERCHIO RIDUTTORE COUVERCLE RÉDUCTEUR REDUCTION UNIT COVER DECKEL UNTERSETZUNGSGETRIEBE TAPA REDUCTOR	T. 14 ZAPM 270W

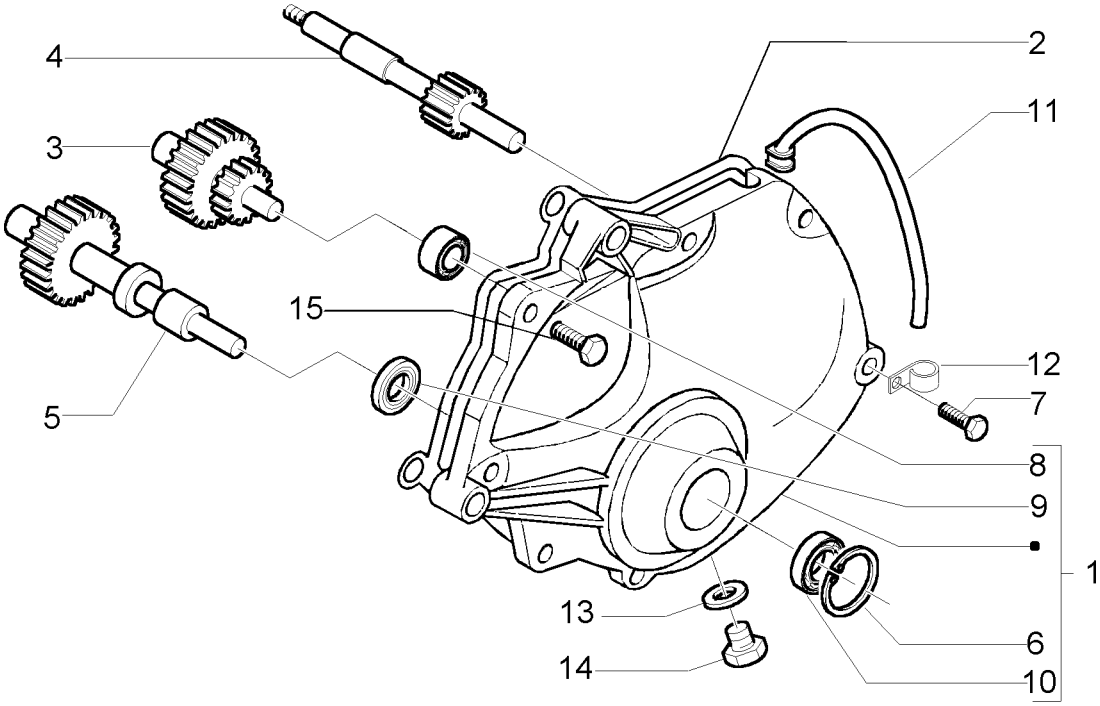

Pos. Pos. Loc. Pos. Pos.	Numero Numéro Number Nummer Número	Q.tà Q.té Q.ty M.ge Cant.	Nota Note Nota Anm. Nota	Denominazione	Désignation	Description	Beschreibung	Descripción
1	8320525	1		Coperchio riduttore	Couvercle réducteur	Reduction unit cover	Deckel Untersetzungsgetriebe	Tapa reductor
2	828115	1		Guarnizione coperchio	Joint couvercle	Cover gasket	Dichtung Deckel	Junta tapa
3	8324875	1		Albero rinvio	Arbre de renvoi	Countershaft	Vorgelegezahnrad	Eje de reenvio
4	8342335	1		Albero puleggia condotta	Arbre poulie entraînée	Driven pulley shaft	Welle geführte Scheibe	Eje polea conducida
5	834770	1		Asse ruota	Axe roue	Wheel axle	Radachse	Eje rueda
6	829206	1		Anello elastico	Circlips	Circlip	Sprengring	Anillo elastico
7	830198	4		Vite	Vis	Screw	Schraube	Tornillo
8	82660R	1		Cuscinetto	Roulement	Bearing	Lager	Cojinete
9	829201	1		Anello tenuta	Bague d'étanchéite	Oil seal	Dichtring	Reten de ac.
10	82659R	1		Cuscinetto	Roulement	Bearing	Lager	Cojinete
11	840733	1		Sfiato	Purge	Breather pipe	Entlüftung	Ventilacion
12	487948	1		Fascetta	Collier	Clamp	Schelle	Abrazadera
13	485703	1		Guarnizione	Joint	Packing	Dichtung	Junta
14	269755	1		Vite	Vis	Screw	Schraube	Tornillo
15	828911	3		Vite	Vis	Screw	Schraube	Tornillo

PIAGGIO®	RACCORDO AMMISSIONE - CORPO FARFALLATO - INIETTORE RACCORD D'ADMISSION - CORPS PAPILLON - INJECTEUR UNION PIPE - THROTTLE BODY - INJECTOR ANSAUGSTUTZEN - DROSSELKLAPPENGEHÄUSE - EINSPRITZDÜSE RACORD ADMISIÓN - CUERPO CON MARIPOSA - INYECTOR	T. 15 ZAPM 270W

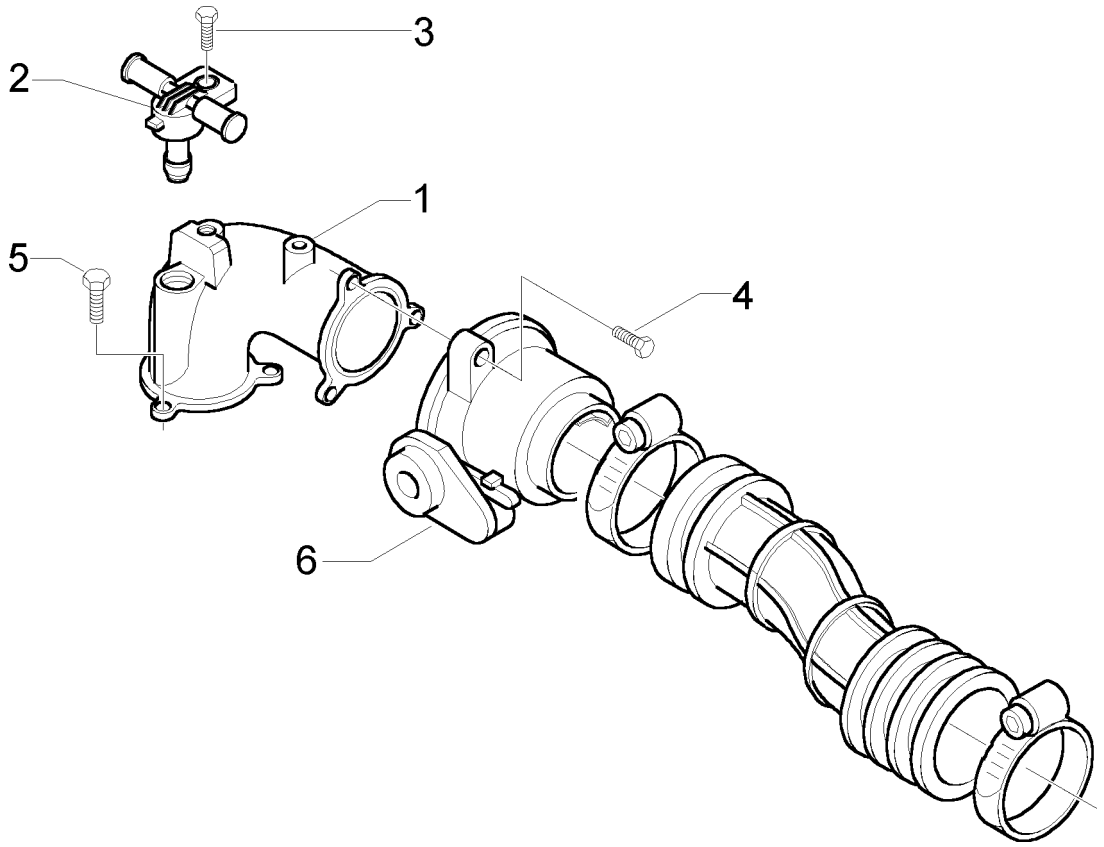

Pos. Pos. Loc. Pos. Pos.	Numero Numéro Number Nummer Número	Q.tà Q.té Q.ty M.ge Cant.	Nota Note Nota Anm. Nota	Denominazione	Désignation	Description	Beschreibung	Descripción
1	834401	1		Raccordo ammiss.	Raccord d'admiss.	Union pipe	Ansaugstutzen	Racord admisión
2	8304275	1		Iniettore	Injecteur avec support	Injector with bracket	Einspritzdüse mit Halter	Inyector con soporte
3	830061	1		Vite	Vis	Screw	Schraube	Tornillo
4	289731	3		Vite	Vis	Screw	Schraube	Tornillo
5	414837	3		Vite	Vis	Screw	Schraube	Tornillo
6	826000	1		Corpo farfallato	Corps papillon	Throttle body	Drosselklappen--gehäuse	Cuerpo con mariposa
7	253293	1		Fascetta	Collier	Clamp	Schlauchschelle	Abrazadera
8	256856	1		Fascetta	Collier	Clamp	Schlauchschelle	Abrazadera
9	828338	1		Manicotto di aspirazione	Manchon admission	Intake sleeve	Ansaugmuffe	Manguito de aspiracion

PIAGGIO®	MARMITTA SILENCIEUX SILENCER AUSPUFFTOPF SILENCIADOR	T. 16 ZAPM 270W

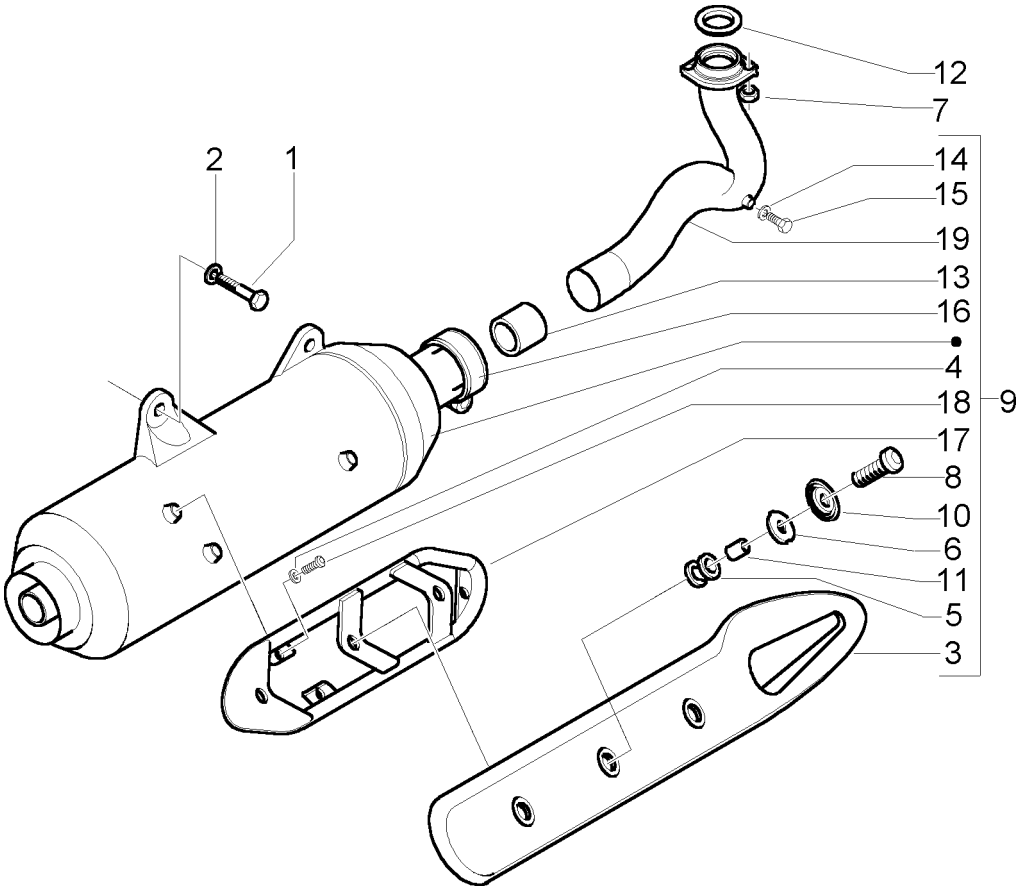

Pos. Pos. Loc. Pos. Pos.	Numero Numéro Number Nummer Número	Q.tà Q.té Q.ty M.ge Cant.	Nota Note Nota Anm. Nota	Denominazione	Désignation	Description	Beschreibung	Descripción
1	599208	3		Vite	Vis	Screw	Schraube	Tornillo
2	840569	3		Rondella	Rondelle	Washer	U.Scheibe	Arandela
3	833910	1		Protezione	Protection	Guard	Schutz	Proteccion
4	834951	3		Rondella	Rondelle	Washer	U.Scheibe	Arandela
5	834040	3		Tampone	Silentbloc	Buffer	Puffer	Silent-block
6	834039	3		Rondella	Rondelle	Washer	U.Scheibe	Arandela
7	015341	2		Dado	Ecrou	Nut	Mutter	Tuerca
8	834038	3		Vite	Vis	Screw	Schraube	Tornillo
9	8439945	1		Marmitta compl.	Pot d'echappement complet	Muffler, assy.	Auspufftopf kpl.	Silenciador completo
10	834643	3		Rondella	Rondelle	Washer	U.Scheibe	Arandela
11	834041	3		Distanziale	Entretoise	Spacer	Distanzstück	Distanciador
12	828194	1		Guarnizione marmitta/testa	Joint pot d'échappement	Head/muffler gasket	Dichtung Auspuff/ Zylinderkopf	Junta escape/ culata
13	828185	1		Boccola	Moyeu	Bush	Buchse	Buje
14	830298	1		Rondella	Rondelle	Washer	U.Scheibe	Arandela
15	833417	1		Tappo a vite	Bouchon à vis	Screw plug	Schraubverschluß	Tapa roscada
16	840370	1		Fascetta	Collier	Clamp	Schlauchschelle	Abrazadera
17	834046	1		Protezione	Protection	Guard	Schutz	Proteccion
18	833569	3		Vite	Vis	Screw	Schraube	Tornillo

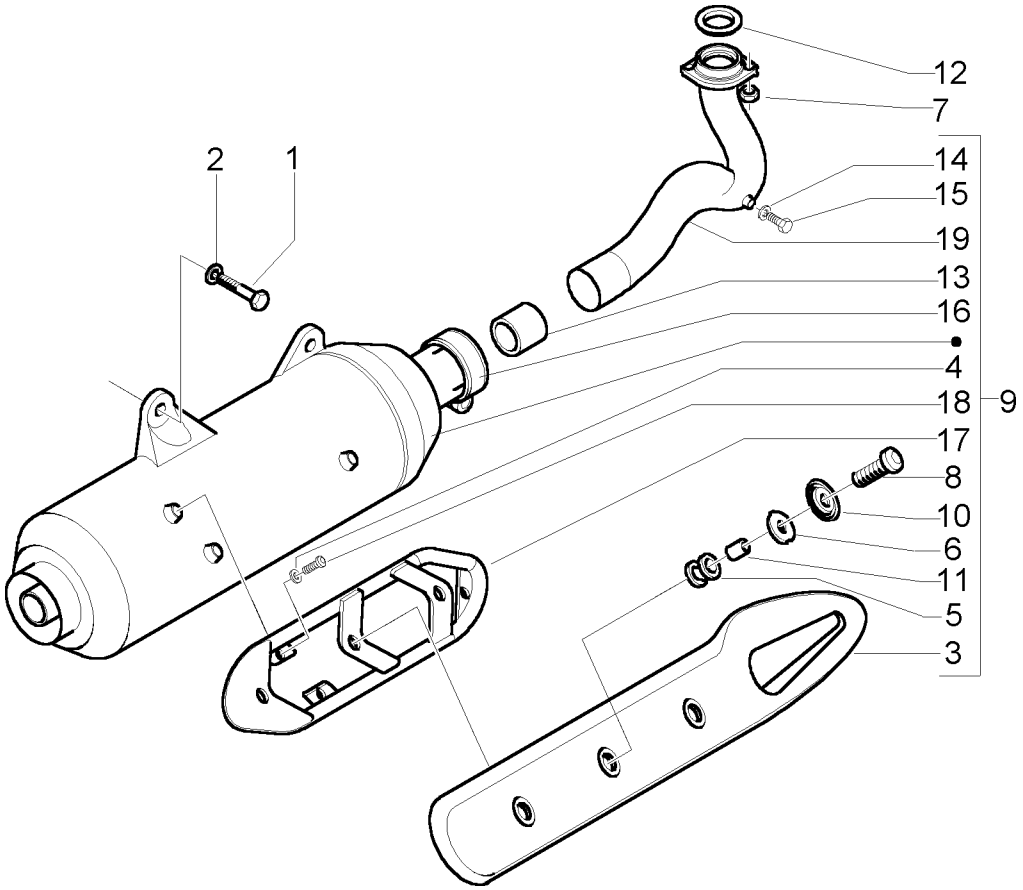

Pos. Pos. Loc. Pos. Pos.	Numero Numéro Number Nummer Número	Q.tà Q.té Q.ty M.ge Cant.	Nota Note Nota Anm. Nota	Denominazione	Désignation	Description	Beschreibung	Descripción
19	832446	1		Collettore scarico	Collecteur Echappement	Exhaust manifold	Abgaskrümmer	Colector escape

PIAGGIO & C. S.p.A
AFTER SALES SERVICE
Pubblicazione dis. 633165
05/2004